Microsemi
SCOTTSDALE DIVISION

1N6103US thru 1N6137AUS and 1N6139US thru 1N6173AUS

Voidless-Hermetically-Sealed Surface Mount Bidirectional Transient Suppressors

DESCRIPTION

This surface mount series of industry recognized voidless-hermetically-sealed Bidirectional Transient Voltage Suppressor (TVS) designs is military qualified to MIL-PRF-19500/516 and are ideal for high-reliability applications where a failure cannot be tolerated. They provide a Working Peak "Standoff" Voltage selection from 5.2 to 152 Volts with two package sizes for 500 W and 1500 W ratings. They are very robust in hard-glass construction and also use an internal metallurgical bond identified as Category I for high-reliability applications. Both of these are also military qualified to MIL-PRF-19500/516 and are available as both a non suffix part and an "A" suffix part involving different voltage tolerances as further described in note 4 on page 2. These devices are also available in axial-leaded packages for thru-hole mounting by deleting the "US" suffix (see separate data sheet for 1N6103 thru 1N6173A). Microsemi also offers numerous other TVS products to meet higher and lower peak pulse power and voltage ratings in both through-hole and surface-mount packages.

APPEARANCE

Package "E"
(or "D-5B")

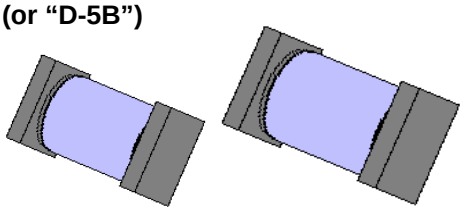

Package "G"
(or "D-5C")

IMPORTANT: For the most current data, consult *MICROSEMI's* website: http://www.microsemi.com

FEATURES

- High surge current and peak pulse power provides transient voltage protection for sensitive circuits
- Triple-layer passivation
- Internal "*Category I*" metallurgical bonds
- Voidless hermetically sealed glass package
- JAN/TX/TXV military qualifications available per MIL-PRF-19500/516 by adding JAN, JANTX, or JANTXV prefix (consult factory for 1N6103US and 1N6138US)
- JANS available for 1N6103AUS thru 1N6118AUS per MIL-PRF-19500/516 as well as further options for screening in accordance with MIL-PRF-19500 for JANS on all others in this series by using a "MSP" prefix, e.g. MSP6119AUS, MSP6143AUS, etc.
- Axial-leaded equivalents also available (see separate data sheet for 1N6103 thru 1N6173)

APPLICATIONS / BENEFITS

- Military and other high reliability transient protection
- Extremely robust construction
- Extensive range in Working Peak "Standoff" Voltage (V_{WM}) from 5.7 to 152 V
- Available as either 500 W or 1500 W Peak Pulse Power (P_{PP}) using two different size packages
- ESD and EFT protection per IEC6100-4-2 and IEC61000-4-4 respectively
- Secondary lightning protection per select levels in IEC61000-4-5
- Square-end-cap terminals for easy placement
- Nonsensitive to ESD per MIL-STD-750 Method 1020
- Inherently radiation hard as described in Microsemi MicroNote 050

MAXIMUM RATINGS

- Operating (T_J) & Storage Temperature: -55°C to +175°C
- Peak Pulse Power (P_{PP}) at 25°C: 500 W for 1N6103US to 1N6137AUS and 1500 W for 1N6139US to 1N6173AUS @ 10/1000 µs (also see Figures 1,2 and 3)
- Impulse repetition rate (duty factor): 0.01%
- Steady-State Power: 3.0 W for 1N6103US to 1N6137AUS and 5.0 W for 1N6139US to 1N6173AUS up to T_{EC} = 150°C. Linearly derate above T_{EC} =150°C to zero at T_{EC} =175°C.
- Steady-State Power: 2.0 W for 1N6103US to 1N6137AUS and 3.0 W for 1N6139US to 1N6173AUS @ T_A = 25°C (see note and Figure 4 for linear derating at higher temperatures)
- Thermal Resistance (junction to endcap): 8.3 °C/W for 1N6103US to 1N6137AUS and 5.0 °C/W for 1N6139US to 1N6173AUS
- Solder Temperatures: 260°C for 10 s (maximum)

MECHANICAL AND PACKAGING

- CASE: Hermetically sealed voidless hard glass with Tungsten slugs
- TERMINATIONS: End caps are Copper with Tin/Lead (Sn/Pb) finish. Note Previous inventory had solid Silver (Ag) with Tin/Lead (Sn/Pb) finish.
- MARKING: None
- POLARITY: No polarity marking for these bidirectional TVSs
- Tape & Reel option: Standard per EIA-481-B
- Weight: 539 mg for 500 Watt (E Package)
  1100 mg for 1500 Watt (G Package)
- See package dimensions and recommended pad layouts on last page for both the "E" (D-5B) and "G" (D-5C) size packages

NOTE: Steady-state power ratings with reference to ambient are for PC boards where thermal resistance from mounting point to ambient is sufficiently controlled where T_{OP} or $T_{J(MAX)}$ is not exceeded

Copyright © 2008

Microsemi
Scottsdale Division
8700 E. Thomas Rd. PO Box 1390, Scottsdale, AZ 85252 USA, (480) 941-6300, Fax: (480) 947-1503

ELECTRICAL CHARACTERISTICS

INDUSTRY TYPE NUMBER (Note 4) P_{PP} Rating		MINIMUM BREAKDOWN VOLTAGE $V_{(BR)}$ @ $I_{(BR)}$		RATED STANDOFF VOLTAGE V_{WM}	MAXIMUM STANDBY CURRENT I_D@ V_{WM}		MAXIMUM CLAMPING VOLTAGE V_C @ I_{PP}	MAXIMUM PEAK PULSE CURRENT I_{PP}		MAXIMUM TEMP. COEF. OF $V_{(BR)}$
					500W	1500W		500 W	1500 W	
500W	1500W	Volts	mA	Volts	uA	uA	Volts	Amps	Amps	%/°C
1N6103AUS	1N6139AUS	7.13	175	5.7	50	300	11.2	44.6	133.9	.06
1N6104AUS	1N6140AUS	7.79	150	6.2	20	100	12.1	41.3	124.0	.06
1N6105AUS	1N6141AUS	8.65	150	6.9	20	100	13.4	37.3	111.9	.06
1N6106AUS	1N6142AUS	9.50	125	7.6	20	100	14.5	34.5	103.4	.07
1N6107AUS	1N6143AUS	10.45	125	8.4	20	20	15.6	32.0	96.2	.07
1N6108AUS	1N6144AUS	11.40	100	9.1	20	20	16.9	29.6	88.8	.07
1N6109AUS	1N6145AUS	12.35	100	9.9	20	20	18.2	27.5	82.4	.08
1N6110AUS	1N6146AUS	14.25	75	11.4	20	20	21.0	23.8	71.4	.08
1N6111AUS	1N6147AUS	15.20	75	12.2	20	20	22.3	22.4	67.3	.08
1N6112AUS	1N6148AUS	17.10	65	13.7	1	10	25.1	19.9	59.8	.085
1N6113AUS	1N6149AUS	19.0	65	15.2	1	5	27.7	18.0	54.2	.085
1N6114AUS	1N6150AUS	20.9	50	16.7	1	5	30.5	16.4	49.2	.085
1N6115AUS	1N6151AUS	22.8	50	18.2	1	5	33.3	15.0	45.0	.09
1N6116AUS	1N6152AUS	25.7	50	20.6	1	5	37.4	13.4	40.1	.09
1N6117AUS	1N6153AUS	28.5	40	22.8	1	5	41.6	12.0	36.0	.09
1N6118AUS	1N6154AUS	31.4	40	25.1	1	5	45.7	10.9	32.8	.095
1N6119AUS	1N6155AUS	34.2	30	27.4	1	5	49.9	10.0	30.1	.095
1N6120AUS	1N6156AUS	37.1	30	29.7	1	5	53.6	9.3	28.0	.095
1N6121AUS	1N6157AUS	40.9	30	32.7	1	5	59.1	8.5	25.4	.095
1N6122AUS	1N6158AUS	44.7	25	35.8	1	5	64.6	7.7	23.2	.095
1N6123AUS	1N6159AUS	48.5	25	38.8	1	5	70.1	7.1	21.4	.095
1N6124AUS	1N6160AUS	53.2	20	42.6	1	5	77.0	6.5	19.5	.095
1N6125AUS	1N6161AUS	58.9	20	47.1	1	5	85.3	5.9	17.6	.100
1N6126AUS	1N6162AUS	64.6	20	51.7	1	5	97.1	5.1	15.4	.100
1N6127AUS	1N6163AUS	71.3	20	56.0	1	5	103.1	4.8	14.5	.100
1N6128AUS	1N6164AUS	77.9	15	62.2	1	5	112.8	4.4	13.3	.100
1N6129AUS	1N6165AUS	86.5	15	69.2	1	5	125.1	4.0	12.0	.100
1N6130AUS	1N6166AUS	95.0	12	76.0	1	5	137.6	3.6	10.9	.100
1N6131AUS	1N6167AUS	104.5	12	86.6	1	5	151.3	3.3	9.9	.100
1N6132AUS	1N6168AUS	114.0	10	91.2	1	5	165.1	3.0	9.1	.100
1N6133AUS	1N6169AUS	123.5	10	98.8	1	5	178.8	2.8	8.4	.105
1N6134AUS	1N6170AUS	142.5	8	114.0	1	5	206.3	2.4	7.3	.105
1N6135AUS	1N6171AUS	152.0	8	121.6	1	5	218.4	2.3	6.9	.105
1N6136AUS	1N6172AUS	171.0	5	136.8	1	5	245.7	2.0	6.1	.110
1N6137AUS	1N6173AUS	190.0	5	152.0	1	5	273.0	1.8	5.5	.110
Note: 4		**1**	**1**	**1**	**2**	**3**	**1**	**2**	**3**	**1**

Notes: 1. Applies to both 500W and 1500W series for devices shown (see note 4)
2. Applies only to 500W series (1N6103US thru 1N6137US)
3. Applies only to 1500W series (1N6139US thru 1N6173AUS)
4. Part number without the A suffix has 5% higher V_C, 5% lower minimum $V_{(BR)}$, and 5% lower I_{PP}.

SYMBOLS & DEFINITIONS

Symbol	Definition
V_{BR}	Minimum Breakdown Voltage: The minimum voltage the device will exhibit at a specified current.
V_{WM}	Working Peak Voltage: The maximum peak voltage that can be applied over the operating temperature range. This is also referred to as Standoff Voltage.
I_D	Maximum Standoff Current: The maximum current that will flow at the specified voltage and temperature.
V_C	Maximum clamping voltage at specified I_{PP} (Peak Pulse Current) at the specified pulse conditions.
P_{PP}	Peak Pulse Power: The peak power dissipation resulting from the peak impulse current I_{PP}.

Copyright © 2008

GRAPHS

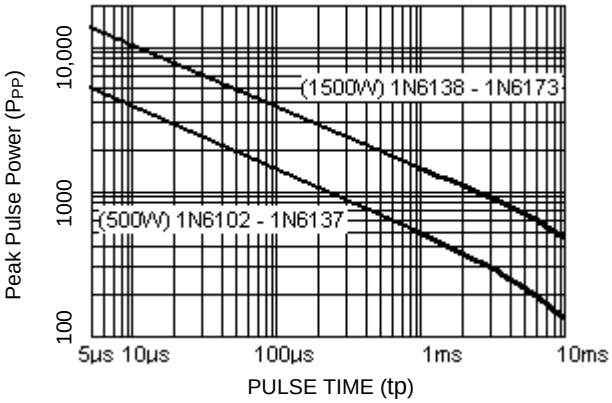

FIGURE 1
PEAK PULSE POWER vs. PULSE TIME

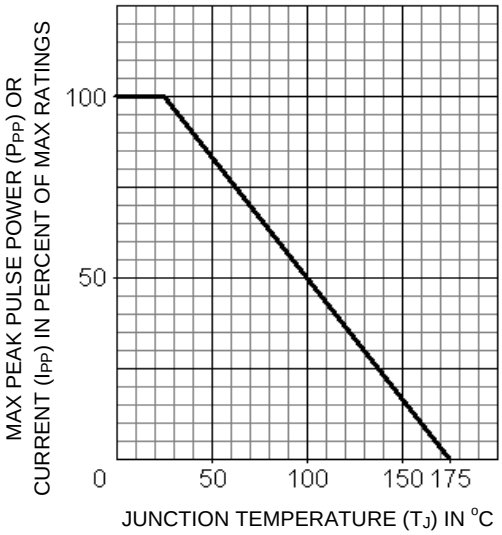

FIGURE 2
PULSE DERATING CURVE
(prior to impulse)

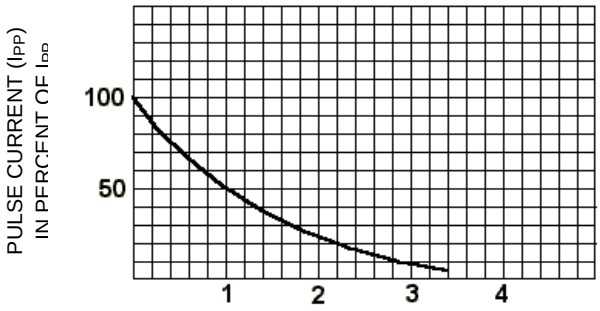

FIGURE 3
PULSE WAVE FORM

Copyright © 2008

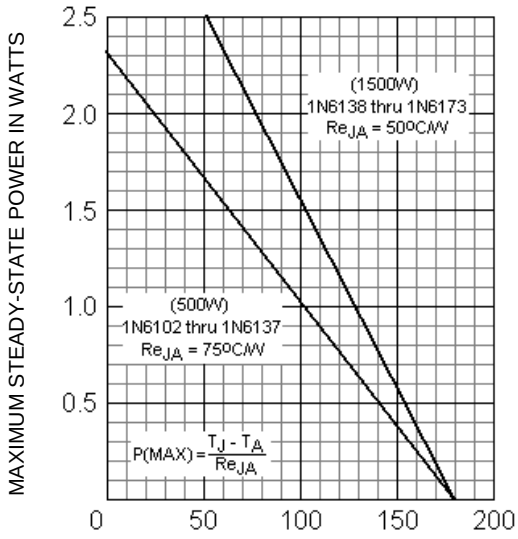

FIGURE 4
STEADY-STATE DERATING CURVE
FOR FREE-AIR MOUNTING ON PC BOARD

PACKAGE DIMENSIONS and PAD LAYOUTS

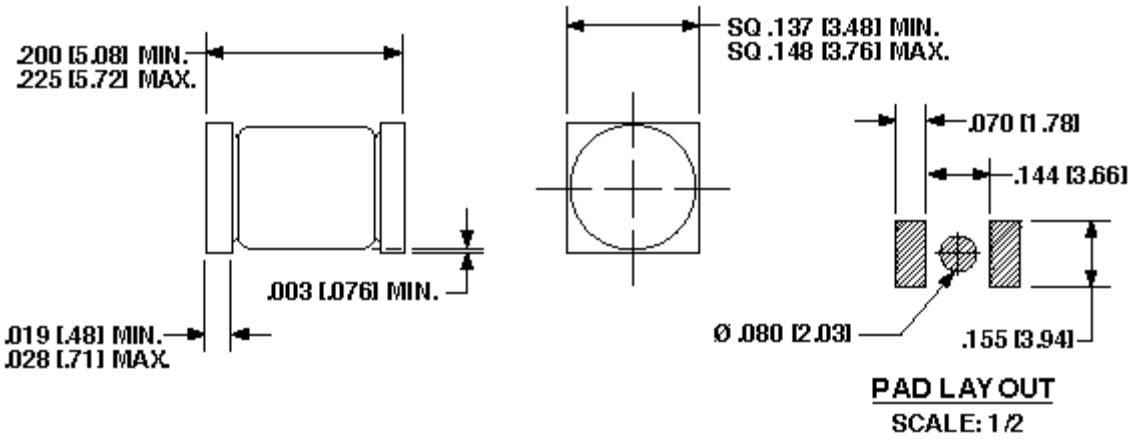

NOTE: DIMENSIONS IN INCHES [MM]

E-MELF-PKG (D-5B)
for 1N6103US thru 1N6137AUS (500 W)

Note: If mounting requires adhesive separate from the solder, an additional 0.080 inch diameter contact may be placed in the center between the pads as an optional spot for cement as shown in the pad layout.

Copyright © 2008

PACKAGE DIMENSIONS and PAD LAYOUTS

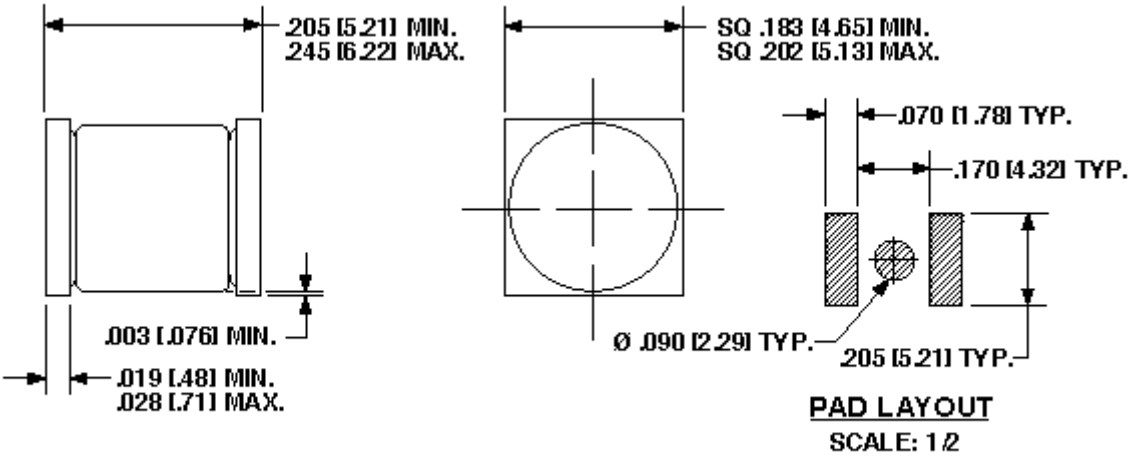

NOTE: DIMENSIONS IN INCHES [MM]

G-MELF-PKG (D-5C)
for 1N6139US thru 1N6173AUS (1500 W)

Note: If mounting requires adhesive separate from the solder, an additional 0.090 inch diameter contact may be placed in the center between the pads as an optional spot for cement as shown in the pad layout.

Copyright © 2008