RoHS
Available on commercial versions

500 mW Metallurgically Bonded Glass Surface Mount Zener Diodes

Qualified per MIL-PRF-19500/435

Qualified Levels:
JAN, JANTX, JANTXV and JANS

DESCRIPTION

The 1N4099UR-1 through 1N4135UR-1 and 1N4614UR-1 through 1N4627UR-1 series are 500 mW, Zener voltage regulators in the surface mount, glass DO-213AA package. Voltages from 1.8 to 100V in 5%, 2%, and 1% tolerances are available. They are constructed with an internal metallurgical bond and are mil-qualified up to the JANS level for high reliability applications.

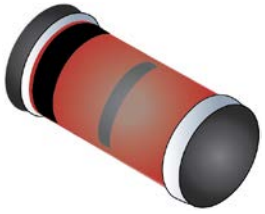

DO-213AA Package

Important: For the latest information, visit our website http://www.microsemi.com.

FEATURES

- Surface mount equivalent to JEDEC registered 1N4099 through 1N4135 and 1N4614 through 1N4627 series.
- Internal metallurgical bond.
- Max noise density 40 µV / √Hz for 6.8 V and up. Falls quickly to 1 µV / √Hz at lower voltages.
- JAN, JANTX, JANTXV and JANS qualifications are available per MIL-PRF-19500/435.
- This series is also available commercially with the CDLL prefix (CDLL4099-1 – CDLL4135-1 and CDLL4614-1 – CDLL4627-1). This CDLL prefix also replaces the MLL prefix on prior devices.
- RoHS compliant versions available (commercial grade only).

APPLICATIONS / BENEFITS

- Regulates voltage over broad ranges of current and temperature.
- Extensive selection from 1.8 to 100 volts.
- Voltage tolerances of 5% (standard), 2% and 1% are available.
- Hermetically sealed surface mount package.
- Non-sensitive to ESD per MIL-STD-750 method 1020.
- Minimal capacitance (see Figure 3).
- Inherently radiation hard as described in Microsemi MicroNote 050.

Also available in:

DO-35 package
(axial-leaded)
1N4099-1 – 1N4135-1 and
1N4614-1 – 1N4627-1

DO-216 package
(tabbed surface mount)
1PMT4099 – 1PMT4135 and
1PMT4614 – 1PMT4627

MAXIMUM RATINGS @ T_C = +25 ºC unless otherwise specified

Parameters/Test Conditions	Symbol	Value	Unit
Junction and Storage Temperature	T_J and T_{STG}	-65 to +175	°C
Thermal Resistance Junction-to-Ambient (1)	$R_{\Theta JA}$	300	°C/W
Thermal Resistance Junction-to-End Cap	$R_{\Theta JEC}$	100	°C/W
Rated Average Power Dissipation (2)	$P_{M(AV)}$	0.5	W
Forward Voltage @ 200 mA	V_F	1.1	V
Solder Temperature @ 10 s		260	°C

Notes: 1. When mounted on FR4 PC board (1 oz Cu) with recommended footprint (see last page).
2. The 0.5 W linearly derates starting at T_{EC} = 125 °C and goes to zero at 175 °C. For ambient T_A condition on a typical PC board, it linearly derates from 500 mW starting at 25 °C and goes to zero at 175 °C (see Figure 2).

MSC – Lawrence
6 Lake Street,
Lawrence, MA 01841
Tel: 1-800-446-1158 or
(978) 620-2600
Fax: (978) 689-0803

MSC – Ireland
Gort Road Business Park,
Ennis, Co. Clare, Ireland
Tel: +353 (0) 65 6840044
Fax: +353 (0) 65 6822298

Website:
www.microsemi.com

©2013 Microsemi Corporation

MECHANICAL and PACKAGING

- CASE: Hermetically sealed glass DO-213AA (SOD80 or CDLL34) MELF style package.
- TERMINALS: Tin-lead or RoHS compliant annealed matte-tin (on commercial grade only) plating. Solderable per MIL-STD-750, method 2026.
- POLARITY: Cathode indicated by banded end. Diode is to be operated with the banded end positive with respect to the opposite end for Zener regulation.
- MARKING: Cathode band only.
- TAPE & REEL option: Standard per EIA-481-1-A with 12 mm tape (add "TR" suffix to part number). Consult factory for quantities.
- WEIGHT: Approximately 0.04 grams.
- See Package Dimensions on last page.

PART NOMENCLATURE

JAN 1N4099 C UR -1 (e3)

Reliability Level
JAN = JAN level
JANTX = JANTX level
JANTXV = JANTXV level
JANS = JANS level
Blank = Commercial

JEDEC type number
(See Electrical Characteristics table)

Zener Voltage Tolerance
Blank = 5%
C = 2%
D = 1%

RoHS Compliance
e3 = RoHS compliant (available on commercial grade only)
Blank = non-RoHS compliant

Metallurgically Bonded

Surface Mount Package

CDLL 4099 C -1 (e3)

Microsemi Designation

JEDEC type number
(See Electrical Characteristics table)

Zener Voltage Tolerance
Blank = 5%
C = 2%
D = 1%

RoHS Compliance
e3 = RoHS compliant Blank = non-RoHS compliant

Metallurgically Bonded

©2013 Microsemi Corporation

SYMBOLS & DEFINITIONS	
Symbol	**Definition**
α_{VZ}	Temperature Coefficient of Regulator Voltage: The change in regulator voltage divided by the change in temperature that caused it expressed in %/C or mV/°C.
I_R	Reverse Current: The maximum reverse (leakage) current that will flow at the specified voltage and temperature.
I_Z, I_{ZT}, I_{ZK}	Regulator Current: The dc regulator current (I_Z), at a specified test point (I_{ZT}), near breakdown knee (I_{ZK}).
I_{ZM}	Maximum Regulator (Zener) Current: The maximum rated dc current for the specified power rating.
N_D	Noise Density: The noise generated over a specified frequency bandwidth usually specified in terms of mV/ √Hz.
V_R	Reverse Voltage: The reverse voltage dc value, no alternating component.
V_Z	Zener Voltage: The Zener voltage the device will exhibit at a specified current (I_Z) in its breakdown region.
Z_{ZT} or Z_{ZK}	Dynamic Impedance: The small signal impedance of the diode when biased to operate in its breakdown region at a specified rms current modulation (typically 10% of I_{ZT} or I_{ZK}) and superimposed on I_{ZT} or I_{ZK} respectively.

©2013 Microsemi Corporation

ELECTRICAL CHARACTERISTICS @ 25 °C unless otherwise stated

INDUSTRY PART NUMBER (Note 1)	MICROSEMI PART NUMBER (Note 1)	NOMINAL ZENER VOLTAGE V_Z @ I_{ZT} (Note 2)	ZENER TEST CURRENT I_{ZT}	MAXIMUM ZENER IMPEDANCE Z_{ZT} (Note 3)	MAXIMUM REVERSE CURRENT I_R @ V_R		MAXIMUM NOISE DENSITY N_D @ I_{ZT}	MAXIMUM ZENER CURRENT I_{ZM}	MAXIMUM TEMP.COEFF. OF ZENER VOLTAGE α_{VZ}
		Volts	µA	Ohms	µA	Volts	µV/√Hz	mA	%/°C
1N4614UR-1	CDLL4614-1	1.8	250	1200	3.5	1.0	1	120.0	-0.075
1N4615UR-1	CDLL4615-1	2.0	250	1250	2.5	1.0	1	110.0	-0.075
1N4616UR-1	CDLL4616-1	2.2	250	1300	2.0	1.0	1	100.0	-0.075
1N4617UR-1	CDLL4617-1	2.4	250	1400	1.0	1.0	1	95.0	-0.075
1N4618UR-1	CDLL4618-1	2.7	250	1500	0.5	1.0	1	90.0	-0.075
1N4619UR-1	CDLL4619-1	3.0	250	1600	0.4	1.0	1	87.0	-0.075
1N4620UR-1	CDLL4620-1	3.3	250	1650	3.5	1.5	1	85.0	-0.075
1N4621UR-1	CDLL4621-1	3.6	250	1700	3.5	2.0	1	83.0	-0.065
1N4622UR-1	CDLL4622-1	3.9	250	1650	2.5	2.0	1	80.0	-0.060
1N4623UR-1	CDLL4623-1	4.3	250	1600	2.0	2.0	1	77.0	-0.050
1N4624UR-1	CDLL4624-1	4.7	250	1550	5.0	3.0	1	75.0	-0.050,+0.020
1N4625UR-1	CDLL4625-1	5.1	250	1500	5.0	3.0	2	70.0	-0.045,+0.030
1N4626UR-1	CDLL4626-1	5.6	250	1400	5.0	4.0	4	65.0	-0.020,+0.040
1N4627UR-1	CDLL4627-1	6.2	250	1200	5.0	5.0	5	61.0	-0.010,+0.050
1N4099UR-1	CDLL4099-1	6.8	250	200	1.0	5.2	40	56.0	+0.060
1N4100UR-1	CDLL4100-1	7.5	250	200	1.0	5.7	40	51.0	+0.065
1N4101UR-1	CDLL4101-1	8.2	250	200	0.5	6.3	40	46.0	+0.070
1N4102UR-1	CDLL4102-1	8.7	250	200	0.5	6.7	40	44.0	+0.075
1N4103UR-1	CDLL4103-1	9.1	250	200	0.5	7.0	40	42.0	+0.080
1N4104UR-1	CDLL4104-1	10.0	250	200	0.5	7.6	40	38.0	+0.080
1N4105UR-1	CDLL4105-1	11.0	250	200	0.05	8.5	40	35.0	+0.080
1N4106UR-1	CDLL4106-1	12.0	250	200	0.05	9.2	40	32.0	+0.080
1N4107UR-1	CDLL4107-1	13.0	250	200	0.05	9.9	40	29.0	+0.080
1N4108UR-1	CDLL4108-1	14.0	250	200	0.05	10.7	40	27.0	+0.085
1N4109UR-1	CDLL4109-1	15.0	250	100	0.05	11.4	40	25.0	+0.085
1N4110UR-1	CDLL4110-1	16.0	250	100	0.05	12.2	40	24.0	+0.085
1N4111UR-1	CDLL4111-1	17.0	250	100	0.05	13.0	40	22.0	+0.090
1N4112UR-1	CDLL4112-1	18.0	250	100	0.05	13.7	40	21.0	+0.090
1N4113UR-1	CDLL4113-1	19.0	250	150	0.05	14.5	40	20.0	+0.090
1N4114UR-1	CDLL4114-1	20.0	250	150	0.01	15.2	40	19.0	+0.090
1N4115UR-1	CDLL4115-1	22.0	250	150	0.01	16.8	40	17.0	+0.090
1N4116UR-1	CDLL4116-1	24.0	250	150	0.01	18.3	40	16.0	+0.090
1N4117UR-1	CDLL4117-1	25.0	250	150	0.01	19.0	40	15.0	+0.090
1N4118UR-1	CDLL4118-1	27.0	250	150	0.01	20.5	40	14.0	+0.090
1N4119UR-1	CDLL4119-1	28.0	250	200	0.01	21.3	40	14.0	+0.095
1N4120UR-1	CDLL4120-1	30.0	250	200	0.01	22.8	40	13.0	+0.095
1N4121UR-1	CDLL4121-1	33.0	250	200	0.01	25.1	40	12.0	+0.095
1N4122UR-1	CDLL4122-1	36.0	250	200	0.01	27.4	40	11.0	+0.095
1N4123UR-1	CDLL4123-1	39.0	250	200	0.01	29.7	40	9.8	+0.095
1N4124UR-1	CDLL4124-1	43.0	250	250	0.01	32.7	40	8.9	+0.095
1N4125UR-1	CDLL4125-1	47.0	250	250	0.01	35.8	40	8.1	+0.095
1N4126UR-1	CDLL4126-1	51.0	250	300	0.01	38.8	40	7.5	+0.100
1N4127UR-1	CDLL4127-1	56.0	250	300	0.01	42.6	40	6.7	+0.100
1N4128UR-1	CDLL4128-1	60.0	250	400	0.01	45.6	40	6.4	+0.100
1N4129UR-1	CDLL4129-1	62.0	250	500	0.01	47.1	40	6.1	+0.100
1N4130UR-1	CDLL4130-1	68.0	250	700	0.01	51.7	40	5.6	+0.100
1N4131UR-1	CDLL4131-1	75.0	250	700	0.01	57.0	40	5.1	+0.100
1N4132UR-1	CDLL4132-1	82.0	250	800	0.01	62.4	40	4.6	+0.100
1N4133UR-1	CDLL4133-1	87.0	250	1000	0.01	66.2	40	4.4	+0.100
1N4134UR-1	CDLL4134-1	91.0	250	1200	0.01	69.2	40	4.2	+0.100
1N4135UR-1	CDLL4135-1	100.0	250	1600	0.01	76.0	40	3.8	+0.100

SEE NOTES ON NEXT PAGE.

©2013 Microsemi Corporation

NOTE 1: These may be ordered as either 1N4614UR-1 thru 1N4627UR-1 and 1N4099UR-1 thru 1N4135UR-1 or CDLL4614-1 thru CDLL4627-1 and CDLL4099-1 thru CDLL4135-1. For 1N military types, add the JAN, JANTX, JANTXV prefix for required screening to the industry part number.

NOTE 2: The JEDEC type numbers shown above have a standard tolerance of +/-5% on the nominal Zener voltage. V_Z is measured with the diode in thermal equilibrium (still air) at 25 °C for end-cap terminations.

NOTE 3: Zener impedance is derived by superimposing on I_{ZT} a 60 Hz rms ac current at 10% of I_{ZT}. See MicroNote 202 for Z_{ZT} variation with I_Z.

GRAPHS

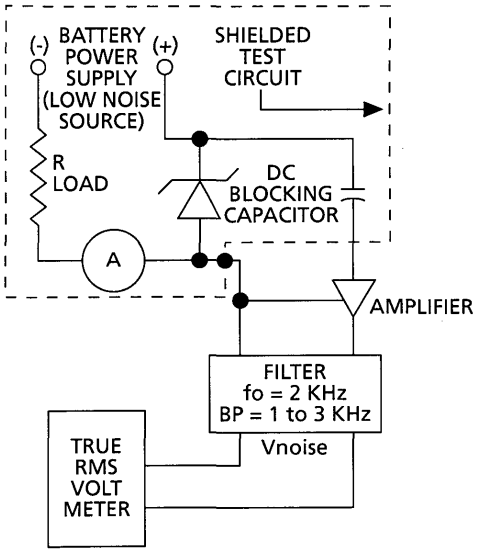

FIGURE 1 – Noise Density Measurement Circuit

Noise density, (N_D) is specified in microvolt-rms per square-root-hertz. Actual measurement is performed using a 1 KHz to 3 KHz frequency bandpass filter at a constant Zener test current (I_{ZT}) at 25 °C ambient temperature. N_D is calculated from the formula.

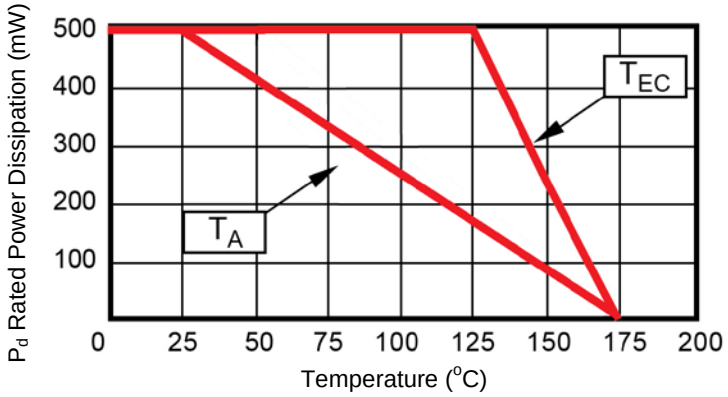

FIGURE 2 – Power Derating Curve

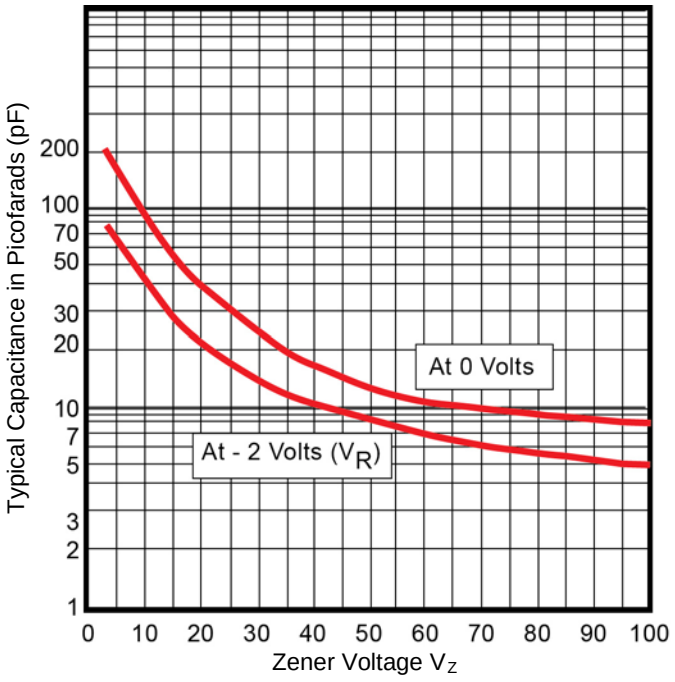

FIGURE 3 – Capacitance vs. Zener Voltage (Typical)

©2013 Microsemi Corporation

PACKAGE DIMENSIONS

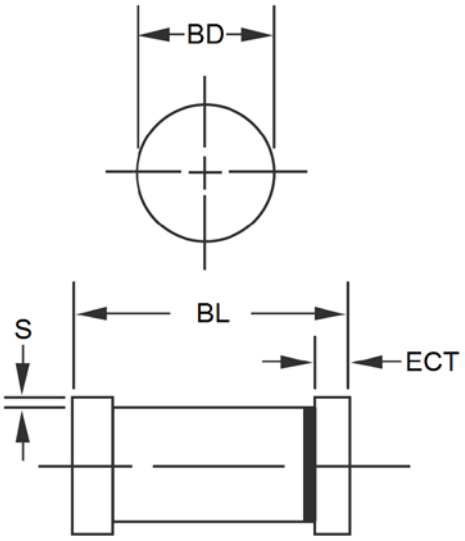

DIM	INCH		MILLIMETERS	
	MIN	MAX	MIN	MAX
BD	0.063	0.067	1.60	1.70
BL	0.130	0.146	3.30	3.71
ECT	0.016	0.022	0.41	0.56
S	0.001 min		0.03 min	

PAD LAYOUT

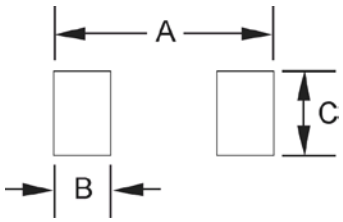

	INCH	mm
A	0.200	5.08
B	0.055	1.40
C	0.080	2.03

©2013 Microsemi Corporation