# 1N6461US thru 1N6468US

Microsemi
SCOTTSDALE DIVISION

## Voidless-Hermetically-Sealed Surface Mount Unidirectional Transient

## DESCRIPTION

This surface mount series of industry recognized voidless-hermetically-sealed Unidirectional Transient Voltage Suppressor (TVS) designs is military qualified to MIL-PRF-19500/551 and are ideal for high-reliability applications where a failure cannot be tolerated. They provide a Working Peak "Standoff" Voltage selection from 5.0 to 51.6 Volts with 500 W ratings. They are very robust in hard-glass construction and also use an internal metallurgical bond identified as Category I for high reliability applications. The 500 W series is military qualified to MIL-PRF-19500/551. These devices are also available in axial-leaded packages for thru-hole mounting by deleting the "US" suffix (see separate data sheet for 1N6461 thru 1N6468). Microsemi also offers numerous other TVS products to meet higher and lower peak pulse power and voltage ratings in both through-hole and surface-mount packages.

## APPEARANCE

**Package "E"**
**(or "D-5B")**

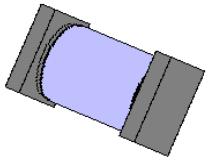

**IMPORTANT:** For the most current data, consult *MICROSEMI's* website: http://www.microsemi.com

## FEATURES

- High surge current and peak pulse power provides transient voltage protection for sensitive circuits
- Triple-layer passivation
- Internal "*Category I*" metallurgical bonds
- Voidless hermetically sealed glass package
- JAN/TX/TXV military qualifications available per MIL-PRF-19500/551 by adding JAN, JANTX, or JANTXV prefix
- Further options for screening in accordance with MIL-PRF-19500 for JANS by using a "SP" prefix, e.g. SP6462, SP6468, etc.
- Axial-leaded equivalents are also available in a square-end-cap MELF configuration (see separate data sheet for 1N6461 thru 1N6168)

## APPLICATIONS / BENEFITS

- Military and other high reliability transient protection
- Extremely robust construction
- Working Peak "Standoff" Voltage ($V_{WM}$) from 5.0 to 51.6 V
- Available as 500 W Peak Pulse Power ($P_{PP}$)
- ESD and EFT protection per IEC61000-4-2 and IEC61000-4-4 respectively
- Secondary lightning protection per select levels in IEC61000-4-5
- Square-end-cap terminals for easy placement
- Nonsensitive to ESD per MIL-STD-750 Method 1020
- Inherently radiation hard as described in Microsemi MicroNote 050

## MAXIMUM RATINGS

- Operating & Storage Temperature: -55°C to +175°C
- Peak Pulse Power at 25°C: 500 Watts @ 10/1000 µs (also see Figures 1,2 and 4)
- Impulse repetition rate (duty factor): 0.01%
- Forward Surge Current: 80 Amps@ 8.33 ms one-half sine wave
- Forward Voltage: 1.5 V @ 1 Amp dc and 4.8 V at 100 Amps (pulsed)
- Steady-State Power: 2.5 Watts @ $T_A$ = 25°C (see note below and Figure 4)
- Thermal Resistance Junction to End Cap: 20 °C/W
- Solder Temperatures: 260°C for 10 s (maximum)

## MECHANICAL AND PACKAGING

- CASE: Hermetically sealed voidless hard glass with Tungsten slugs
- TERMINATIONS: End caps are Copper with Tin/Lead (Sn/Pb) finish. Note; Previous inventory had solid silver end caps with Tin/Lead (Sn/Pb) finish.
- MARKING: None
- POLARITY: Cathode band
- Tape & Reel option: Standard per EIA-481-B
- Weight: 539 mg
- See package dimensions on last page

**NOTE:** Steady-state power ratings with reference to ambient are for PC boards where thermal resistance from mounting point to ambient is sufficiently controlled where $T_{J(MAX)}$ is not exceeded.



Copyright © 2007


**Microsemi**
Scottsdale Division
8700 E. Thomas Rd. PO Box 1390, Scottsdale, AZ 85252 USA, (480) 941-6300, Fax: (480) 947-1503

## ELECTRICAL CHARACTERISTICS

| TYPE | BREAK DOWN VOLTAGE V(BR) MIN. | BREAKDOWN CURRENT $I_{(BR)}$ | WORKING PEAK VOLTAGE $V_{WM}$ | MAX LEAKAGE CURRENT $I_D$ | MAXIMUM CLAMPING VOLTAGE $V_C$ @ 10/1000 µs | MAXIMUM PEAK PULSE CURRENT $I_{PP}$ | | MAXIMUM TEMP. COEF. OF $V_{(BR)}$ |
|---|---|---|---|---|---|---|---|---|
| | | | | | | @8/20 µs | @10/1000 µs | |
| | Volts | mAdc | Vdc | µAdc | V(pk) | A(pk) | A(pk) | %/°C |
| 1N6461US | 5.6 | 25 | 5 | 3000 | 9.0 | 315 | 56 | -.03, +0.04 |
| 1N6462US | 6.5 | 20 | 6 | 2500 | 11.0 | 258 | 46 | 0.06 |
| 1N6463US | 13.6 | 5 | 12 | 500 | 22.6 | 125 | 22 | 0.085 |
| 1N6464US | 16.4 | 5 | 15 | 500 | 26.5 | 107 | 19 | 0.085 |
| 1N6465US | 27.0 | 2 | 24 | 50 | 41.4 | 69 | 12 | .096 |
| 1N6466US | 33.0 | 1 | 30.5 | 3 | 47.5 | 63 | 11 | .098 |
| 1N6467US | 43.7 | 1 | 40.3 | 2 | 63.5 | 45 | 8 | .101 |
| 1N6468US | 54.0 | 1 | 51.6 | 2 | 78.5 | 35 | 6 | .103 |

## SYMBOLS & DEFINITIONS

| Symbol | Definition |
|---|---|
| $V_{BR}$ | Minimum Breakdown Voltage: The minimum voltage the device will exhibit at a specified current. |
| $V_{WM}$ | Working Peak Voltage: The maximum peak voltage that can be applied over the operating temperature range. This is also referred to as Standoff Voltage. |
| $I_D$ | Maximum Standoff Current: The maximum current that will flow at the specified voltage and temperature. |
| $V_C$ | Maximum clamping voltage at specified $I_{PP}$ (Peak Pulse Current) at the specified pulse conditions. |
| $P_{PP}$ | Peak Pulse Power: The peak power dissipation resulting from the peak impulse current $I_{PP}$. |

## GRAPHS

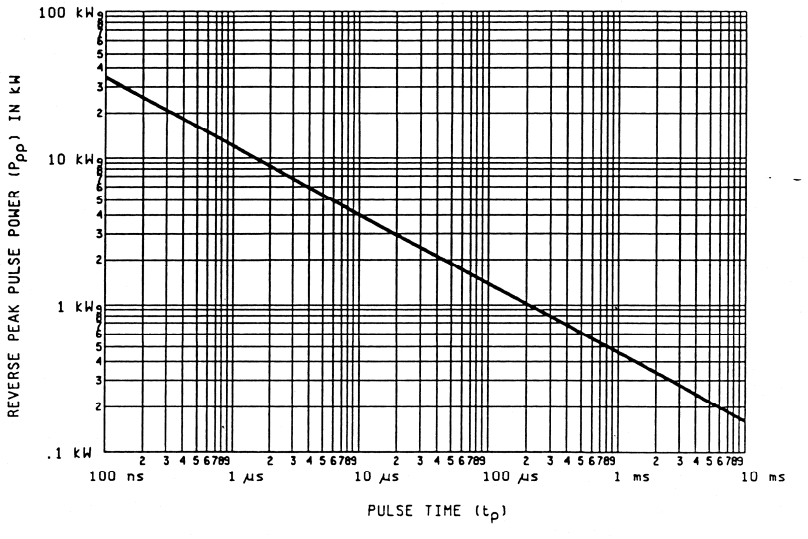


**FIGURE 1**
PEAK PULSE POWER vs. PULSE TIME

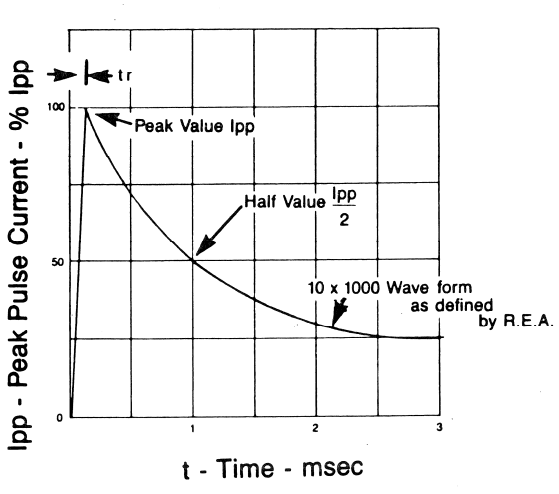


**FIGURE 2**
10/1000 µs CURRENT IMPULSE WAVEFORM

www.Microsemi.COM



Copyright © 2007
10-03-2007 REV C

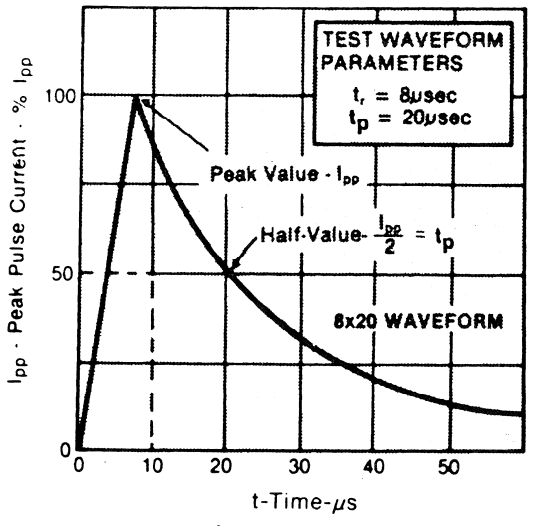


**FIGURE 3**
8/20 µs CURRENT IMPULSE WAVEFORM
(per MIL-PRF-19500/551

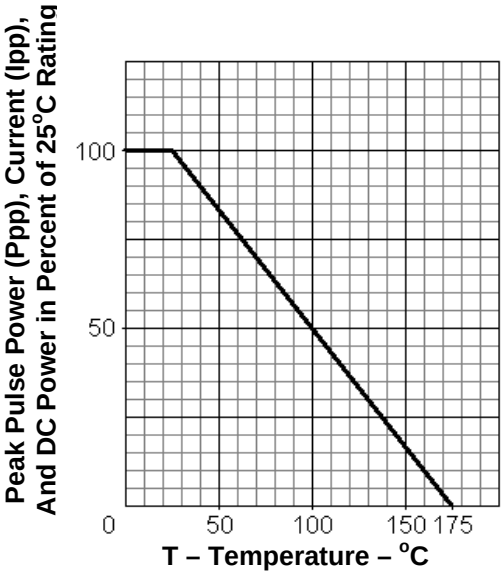


**FIGURE 4**
DERATING CURVE

## PACKAGE DIMENSIONS Inches [mm]

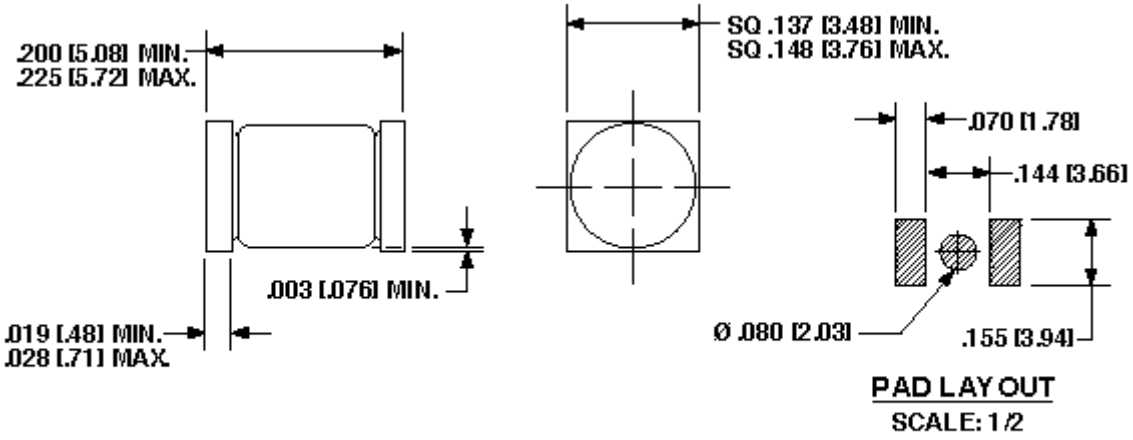


NOTE: DIMENSIONS IN INCHES [MM]

### E-MELF-PKG (D-5B)

**Note:** If mounting requires adhesive separate from the solder, an additional 0.080 inch diameter contact may be placed in the center between the pads as an optional spot for cement as shown in the pad layout.



Copyright © 2007