MCP22301

Stand-Alone USB Type-C™ Power Delivery 3.1 Controller

Features

- Programmable USB Type-C™ [1] Power Delivery (PD) Solution for Source-only, Sink-only, Dual Role Power, and Dual Role Data Applications
- Companion device for USB Power Delivery Stack (PDS)
- Fully Customizable Software
- Standard Power Delivery Power Profiles (15/27/45/60/100W) Supported with No Software Modification
- USB Power Delivery 3.1 Compliant MAC
- USB Type-C™ Connector Support with Connection Detection and Control
- Integrated Analog Discrete Components Reduce Bill of Materials and Design Footprint
- Easily Supports One Additional Power Delivery Port via MCP22350 Add-on
- Industrial Temperature Support

Target Applications

- Point-of-Sale Terminals
- Charging Lockers
- IoT Products and Sensors
- Smart Speakers and Monitors
- Conference Systems
- Power Tools
- Multi-port Charging Docks

Key Benefits

- Fully Customizable Power Delivery Firmware
  - Industry standard MPLABX development and programming environment
  - Supports all standard power delivery profiles (15/27/45/60/100W) and custom profiles
  - Supports Dual Role Port (DRP) operation
  - Supports Alternate Mode operation
  - Power Delivery Stack (PDS) enables customized PD applications
- 32-bit ARM Cortex-M0+ CPU
  - 64 KB Flash, 8 KB RAM
- Optional Two Port Solution via External MCP22350
  - SPI for external MCP22350 communication
  - Power delivery firmware controls all ports
- Integrated Analog Discrete Components
  - VCONN FETs with Rp/Rd switching
  - Dead battery Rd termination (MCP22301-2 Only)
  - Programmable current sense for overcurrent conditions
  - Voltage sense for overvoltage conditions
- USB Power Delivery MAC
  - Compliant with USB Power Delivery Specification Revision 3.1
  - Power Delivery Packet Framing
  - CRC Checking/Generation
  - 4B/5B Encoding/Decoding
  - BMC Encoding/Decoding
  - EOP/SOP Generation for PD Frames
  - SOP Detection and SOP Header Processing
  - Separate RX/TX FIFOs
  - Automatic GoodCRC Message Generation
  - Automatic Retry Generation
  - Error Handling
  - Low Standby Power Support
- USB Type-C Cable Detect Logic
  - Auto Cable Attach and Orientation Detection
  - Routes Baseband Communication to Respective CC Pin per Detected Orientation
  - VCONN Supply Control for Active Cable
  - Charging Current Capability Detection
- Power and I/Os
  - Integrated 1.8V Voltage Regulator
  - 10 Configurable General Purpose I/O Pins
- Package
  - 40-VQFN (6.0 mm × 6.0 mm)
- Environmental
  - Industrial Temperature Range (-40°C to +85°C)

1. USB Type-C™ and USB-C™ are trademarks of USB Implementers Forum.

© 2024 Microchip Technology Inc. and its subsidiaries

1.0 PREFACE

1.1 Glossary of Terms

TABLE 1-1: GLOSSARY OF TERMS

Term	Definition
BCI	Baseband CC interface
Billboard	USB Billboard Device. A required USB device class for UFPs which support Alternate Modes in order to provide product information to the USB Host.
BIST	Built-in Self Test
BMC	Bi-phase Mark Coding
Byte	8 bits
CC	Generic reference to USB Type-C™ Cable / Connector CC1/CC2 Pins
CSR	Control and Status Register
DFP	Downstream Facing Port (USB Type-C™ Specification Definition)
DP	DisplayPort (a VESA standard interface)
DRP	Dual-role Power
ESD	Electro-static Discharge
FIFO	First-in, First-out buffer
GPIO	General Purpose Input/Output
Host	External System (includes processor, application software, etc.)
HBM	Human Body Model (simulates ESD from humans)
HS	High-speed
LDO	Linear Drop-out Regulator
MAC	Media Access Controller
Microchip	Microchip Technology Incorporated
N/A	Not Applicable
NC	No Connect (pin)
OCS	Over-current Sense
PD / UPD	USB Power Delivery
PDO	Power Delivery Object (USB PD Specification definition). PDOs enable the port to indicate its Port Partner supported combinations of Voltage/Current or Power as well as the type of supply (Fixed, Variable, Battery) in Source Role or Sink Role.
PIO	General Purpose I/O
POR	Power-on Reset
Port Partner	Remote port which is connected to the MCP22301's local port
PRBS	Pseudo Random Binary Sequence
Source Role	USB Type-C port sinking power from its Port Partner
Source-only Operation	Operation exclusively in USB Type-C / Power Delivery Source Role as defined in the USB Type-C and Power-Delivery specifications. In this mode of operation, USB Type-C Dual-Role Power Operation is not supported, and there is no support for USB Power Role Swap.
SPI	Serial Peripheral Interface
SS	SuperSpeed
Stand-alone Mode	Chip operation without the control or configuration by an external MCU. Policy is defined locally by the MCP22301 firmware. Configuration is achieved by use of configuration straps.
UFP	Upstream-facing Port (USB Type-C™ specification definition)
USB	Universal Serial Bus

© 2024 Microchip Technology Inc. and its subsidiaries

TABLE 1-1: GLOSSARY OF TERMS (CONTINUED)

Term	Definition
USB Power Delivery Operation	Port is operating using USB Power Delivery protocols in conformance to the USB PD Specification.
USB Power Role Swap	Message sequence as defined in the USB PD Specification, enabling a transition between Source Role and Sink Role during USB Power Delivery Operation
USB Type-C™	USB Type-C™ Cable / Connector

1.2 Buffer Types

TABLE 1-2: BUFFER TYPES

Buffer Type	Description
I	Input
IS	Schmitt-triggered Input
O2	Output with 2 mA sink and 2 mA source
OD2	Open-drain output with 2 mA sink and 2 mA source
O8	Output with 8 mA sink and 8 mA source
PD	200 kΩ (typical) internal pull-down. **Note:** Internal pull-down resistors prevent unconnected inputs from floating. Do not rely on internal resistors to drive signals external to the device. When connected to a load that must be pulled low, an external resistor must be added.
AI	Analog Input
AO	Analog Output
AIO	Analog Bi-directional
P	Power Pin

Note: Refer to Section 5.4, "DC Characteristics," on page 28 for the electrical characteristics of the various buffers.

1.3 References

- Microchip MCP22350 data sheet: https://ww1.microchip.com/downloads/aemDocuments/documents/APID/ProductDocuments/DataSheets/MCP22350-Integrated-Small-Form-Factor-USB-Type-C-Data-Sheet-DS20006885.pdf
- Microchip SAM D20 device family data sheet: http://ww1.microchip.com/downloads/en/DeviceDoc/SAM_D20_%20Family_Datasheet_DS60001504C.pdf
- USB Power Delivery documents: https://www.usb.org/document-library/usb-power-delivery
- USB Type-C™ Specification: https://www.usb.org/usb-type-cr-cable-and-connector-specification

© 2024 Microchip Technology Inc. and its subsidiaries

2.0 INTRODUCTION

2.1 General Description

The MCP22301 is a stand-alone, small form factor USB Type-C™ Power Delivery (PD) Port Controller designed to adhere to the *USB Type-C™ Cable and Connector Specification* and *USB Power Delivery 3.1 Specification*. The MCP22301 provides stand-alone operation for a wide range of PD applications, enabling cable plug orientation and detection for a USB Type-C receptacle, and implementing baseband communication with a partner USB Type-C device via the integrated USB Power Delivery 3.1 MAC.

The MCP22301 is an integrated PD solution with SAMD20 (32-bit ARM Cortex-M0+) microcontroller and MCP22350 PD MAC/PHY functionality. The embedded 32-bit ARM Cortex-M0+ can execute the USB Power Delivery Stack (PDS). Optionally, a second PD port is supported via SPI connection of additional external Microchip MCP22350 devices. The MCP22301 devices are shipped blank and require programming with compiled application specific code before operation.

Additionally, the MCP22301 integrates many of the analog discrete components required for USB Type-C PD applications, including two VCONN FETs with Rp/Rd switching and current/voltage sense circuitry for over-voltage/current detection. By integrating the PD firmware and many of the analog discrete components required for USB Type-C PD applications, the MCP22301 provides a low cost, stand-alone, fast time-to-market solution for consumer and industrial applications.

The Microchip MCP22301 family includes the following devices:

- MCP22301-1, without dead battery support in hardware
- MCP22301-2, with dead battery support in hardware

The MCP22301 is available in industrial temperature range.

2.2 USB Power Delivery Stack (PDS)

The PDS firmware stack allows for a wide range of USB Power Delivery applications, including but not limited to: Single or Multi-Port source Only applications, Bus-Powered Sink applications, Battery-Powered Sink applications, and Dual Role Data / Dual Role Power applications such as PD-based docking stations or PD-based dongles.

The PDS firmware stack is continuously deployed. Not all features that are able to be supported by the MCP22301 device are necessarily supported by PDS. The supported features may be expanded over time. The PDS firmware stack can be downloaded from the MCP22301 product page. Refer to the MCP22301 product page and PDS Online code repository for details on the currently supported feature set and future development road-map. Additional feature development may be requested through Microchip support channels.

2.3 Example Applications

The MCP22301 has been designed for multiple applications, including:

- Source-Only Applications (E.G., Charging Ports)
- Two-Port Source-Only Applications
- Bus-Powered or Battery Powered Sink-Only Applications
- Dual Role Power/Data Application (5V Source, High Voltage Sink)
- Dual Role Power/Data Application (High Voltage Source, 5V @ 0A Sink)
- 2-Port Dual Role Power/Data Application ‘Charge-Through Adapter’

2.3.1 SOURCE-ONLY APPLICATIONS (E.G., CHARGING PORTS)

The simplest MCP22301 application is a power source (Source-Only), as shown in Figure 2-1. The MCP22301 control I/O configures the DC-DC converter, selecting the output voltage, and controls the load switch to regulate and protect the output voltage. The load switch can also be replaced by discrete FETs and over-current / over-voltage protection circuits.

Additional notes on Source-Only Charging Port Applications:

- Supporting USB data is not required for a Charging Port.
- A Power Source Load Switch is optional for Source-Only ports. Source-Only ports are permitted to maintain a large bulk capacitance on VBUS at all times, even when the port is in the detached state.
- USB3 operation is optional for PD docking ports.

© 2024 Microchip Technology Inc. and its subsidiaries

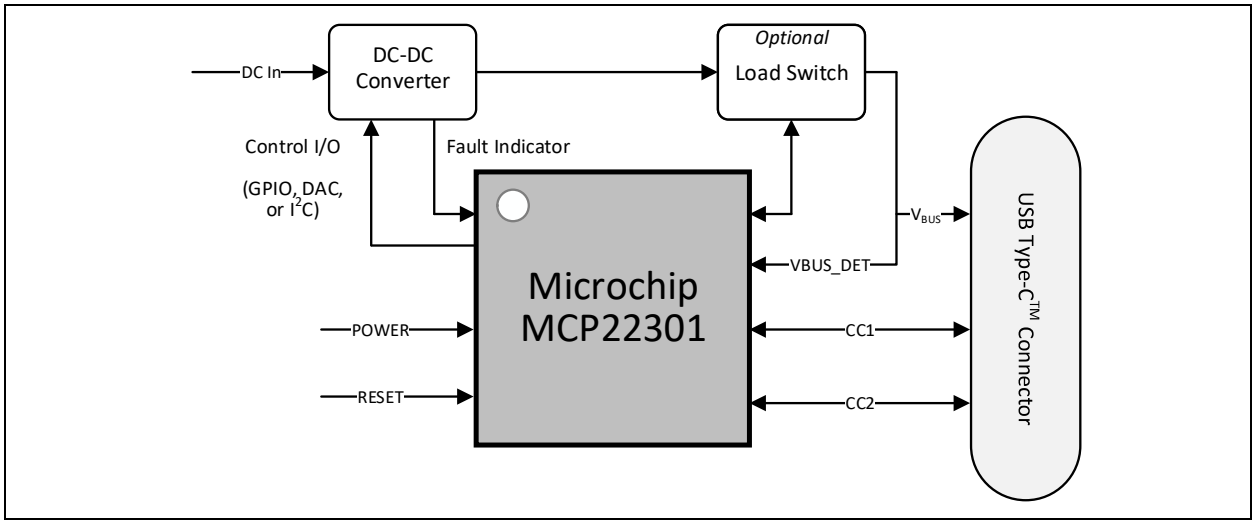

FIGURE 2-1: *System Block Diagram - Source-Only Application.*

2.3.2 TWO-PORT SOURCE-ONLY APPLICATIONS

Some applications may need multiple USB Type-C™ power delivery ports. These ports can be implemented by connecting a MCP22301 and a MCP22350 via the SPI interface, as shown in Figure 2-2. The MCP22301 will execute the stack for the MCP22350. The two-port implementation supports dynamic power allocation (e.g., go-to power min based on an external input).

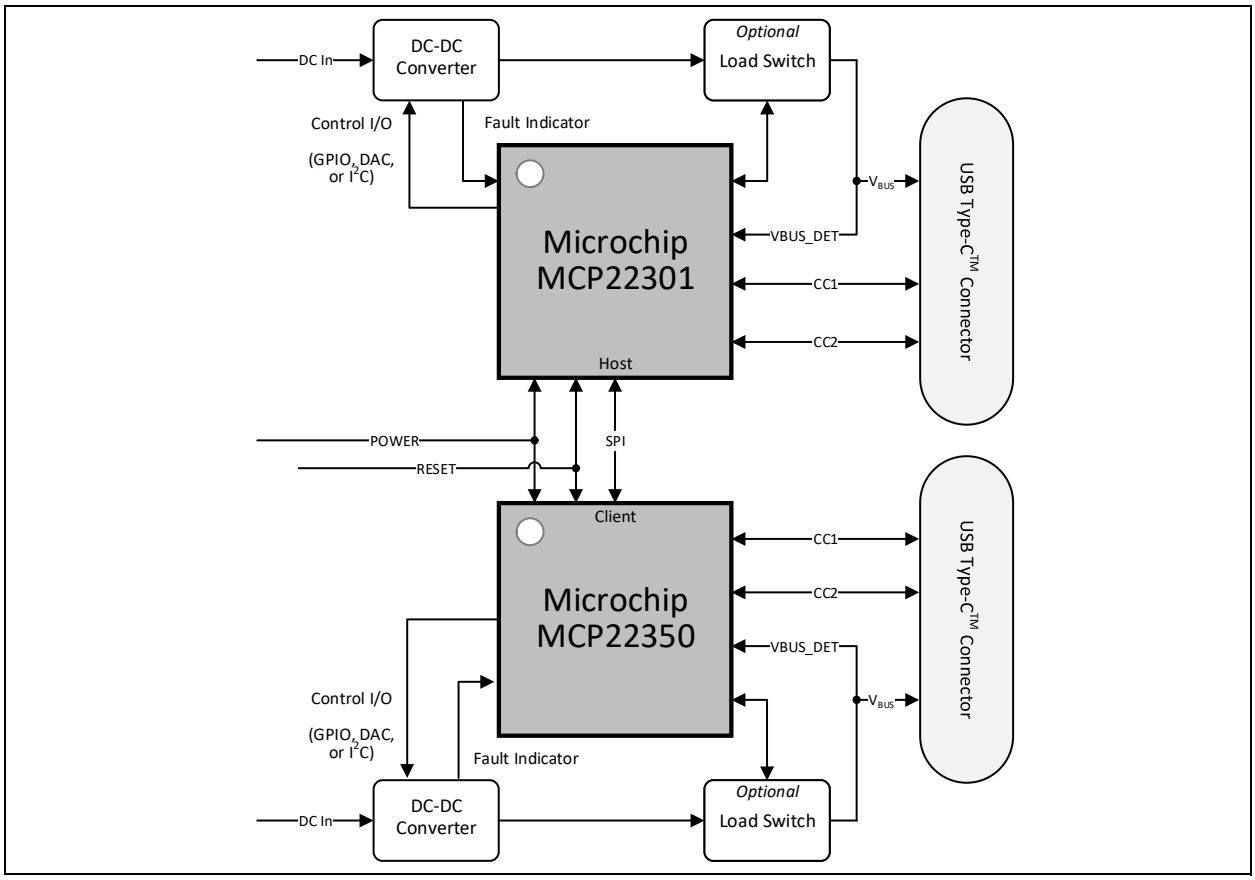

FIGURE 2-2: *System Block Diagram - Two-Port Application.*

2.3.3 BUS-POWERED OR BATTERY POWERED SINK-ONLY APPLICATIONS

An example of a bus powered power sink (Sink-Only) application is shown in Figure 2-3. A bus powered Sink-Only application derives all power from the upstream VBUS connection and does not have any other power source. The MCP22301-2 device with dead battery support should be selected for all Sink-Only devices. The dead battery Rp terminations allow the Sink-Only device to be detected and powered from an attached DFP port when connected in an unpowered state.

Additional notes on Bus-Power or Battery Powered Sink-Only Applications:

- USB data support is optional.
- If USB3 data is supported, a 2:1 multiplexer may be required to handle Type-C cable insertion reversibility. Device controllers and hubs specifically designed to support USB Type-C may also integrate the reversibility functionality.
- USB Alternate Modes may also be supported in Sink-Only applications.
- DisplayPort support is optional for mobile device ports.
- USB2 signals may be connected directly to the Type-C connector; a multiplexer is not necessary as long as the USB2 signal layout is carefully managed to keep branches at a minimum.

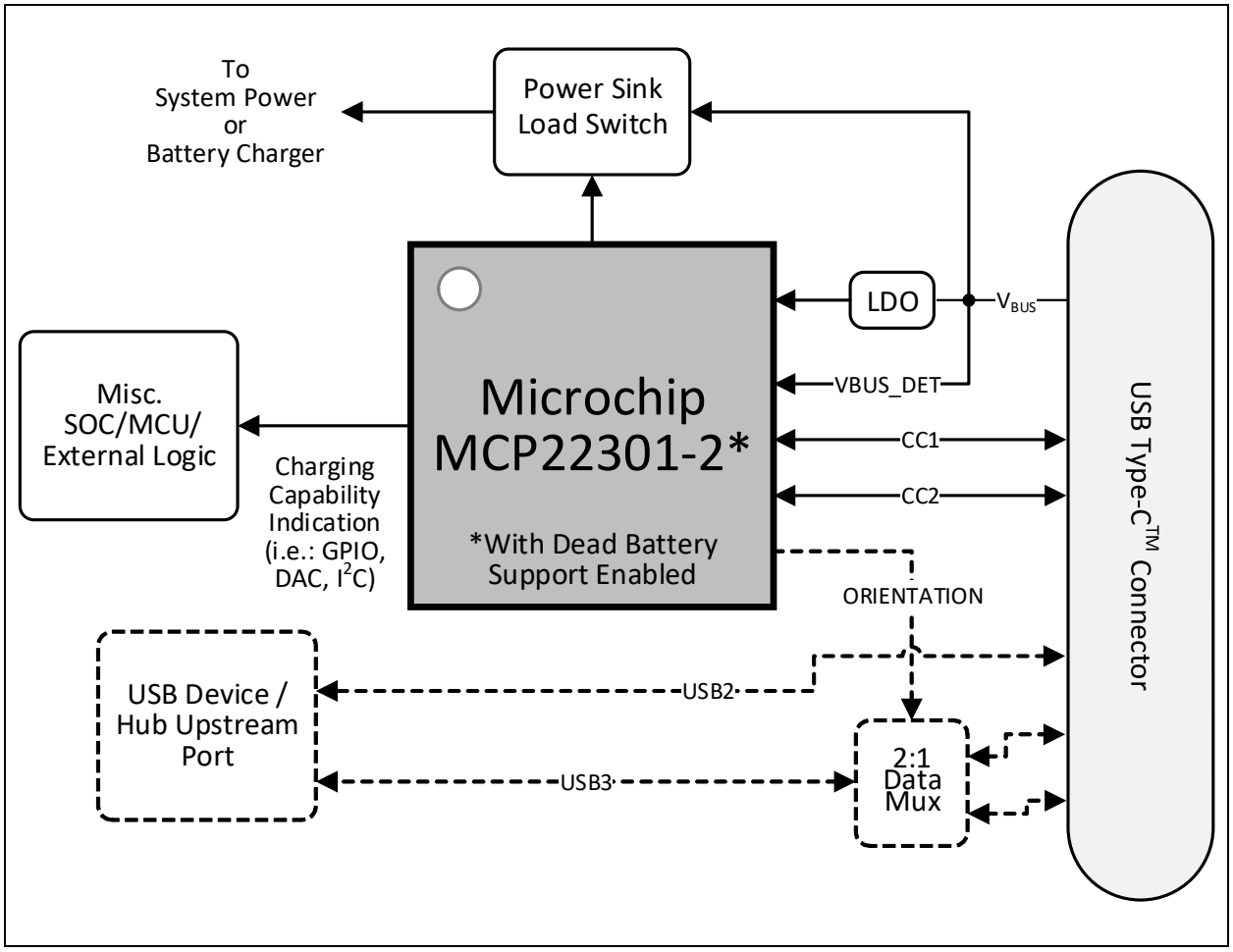

FIGURE 2-3: *System Block Diagram - Sink-Only Application.*

© 2024 Microchip Technology Inc. and its subsidiaries

2.3.4 DUAL ROLE POWER/DATA APPLICATION (5V SOURCE, HIGH VOLTAGE SINK)

An example of a mobile device port is shown in Figure 2-4. In this example a mobile device, such as a notebook, smart-phone, or tablet, is capable of operating as a USB host (and device if the processor is capable of OTG operation), receiving a charge, and driving an external video display through a single Type-C connection. A cross-bar switch is shown for routing DisplayPort Alternate Mode and USB3 data to the connector, allowing port expansion and video display.

Additional notes on Dual Role Power/Data (5V Source, High Voltage Sink) Applications:

- A typical mobile device will limit the power sourcing capability to 5V only in order to preserve battery life. This is not explicitly required and a mobile device may optionally provide up to the maximum 100W capability if the system supports it.
- When the port is operating as a power sink/data UFP, the USB Host / Hub Downstream Port block is not required to support USB Device / Hub Upstream Port operation.
- A 5V Source Load Switch device must be tolerant of the maximum supported sinking voltage.
- USB3 operation is optional for mobile device ports.
- DisplayPort support is optional for mobile device ports.
- If both USB3 and DisplayPort operation are omitted, the crossbar data switch is not necessary.
- USB2 signals may be connected directly to the Type-C connector; a multiplexer is not necessary as long as the USB2 signal layout is carefully managed to keep branches to a minimum.

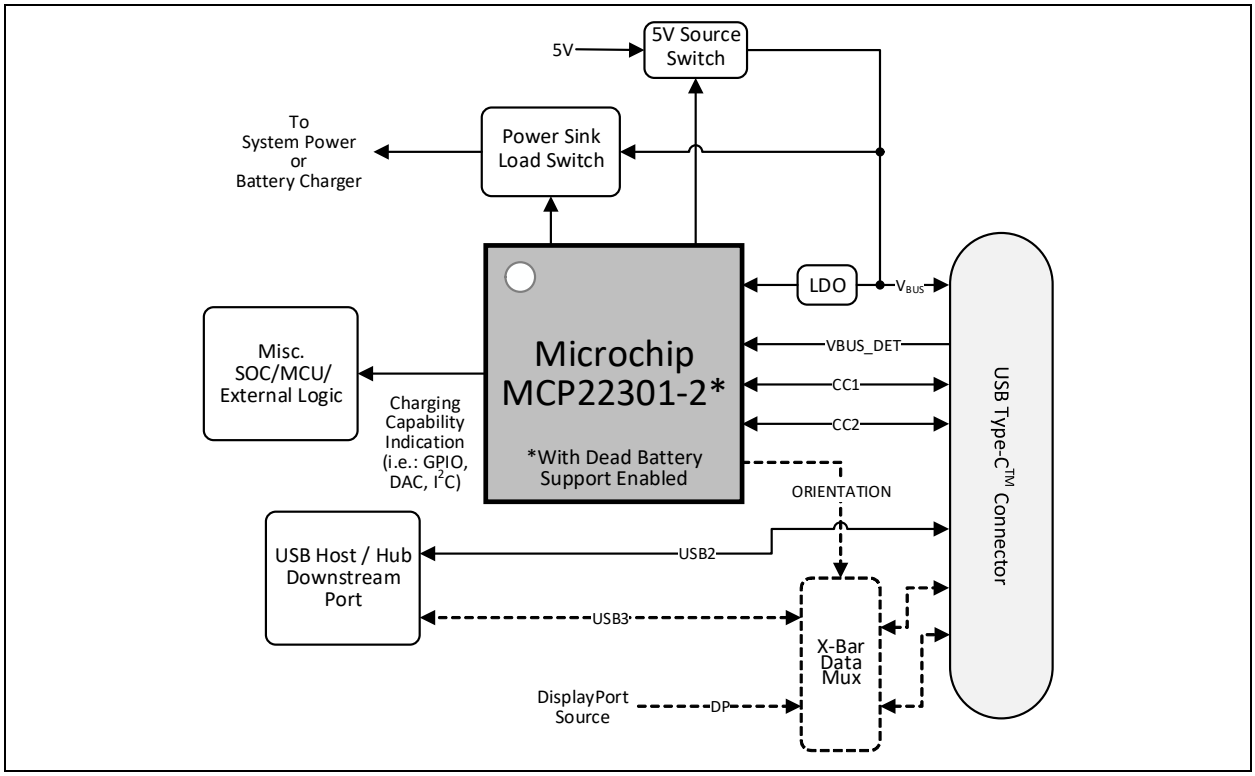

FIGURE 2-4: *System Block Diagram - Dual Role Power/Data Application (5V Source, High Voltage Sink).*

© 2024 Microchip Technology Inc. and its subsidiaries

2.3.5 DUAL ROLE POWER/DATA APPLICATION (HIGH VOLTAGE SOURCE, 5V @ 0A SINK)

An example of a PD docking port is shown in Figure 2-5. In this example a battery powered mobile device, such as a notebook, smart-phone, or tablet may connect to the docking PD port and receive a charge, access the USB device tree, and drive an external video display through a single Type-C connection. A cross-bar switch is shown for routing DisplayPort Alternate Mode and USB3 data to the connector, allowing port expansion and video display.

Additional notes on Dual Role Power/Data (High Voltage Source, 5V @ 0A Sink) Applications:

- While a PD docking port may technically resolve into a power sink role, a typical PD dock will not attempt to sink any power while operating as a power sink. This type of operation may be referred to a “5V @ 0A Sink”.
- When the port is operating as a power sink/data UFP, the USB Device/Hub Upstream Port block is not required to support USB Host/Hub Downstream Port operation.
- A Power Source Load Switch device is necessary, as the DC-DC converters bulk capacitance must be isolated from VBUS when the port is operating as a 5V @ 0A Sink.
- USB3 operation is optional for PD docking ports.
- DisplayPort support is optional for PD docking ports.
- If an Alternate Mode such as DisplayPort is supported, a Billboard device must also be included within the system and be exposed following an Alternate Mode negotiation failure (A Billboard device may optionally be connected at all times and communicate a successful Alternate Mode connection, but this is optional).
- If both USB3 and DisplayPort operation are omitted, the crossbar data switch is not necessary.
- USB2 signals may be connected directly to the Type-C connector; a multiplexer is not necessary as long as the USB2 signal layout is carefully managed to keep branches to a minimum.

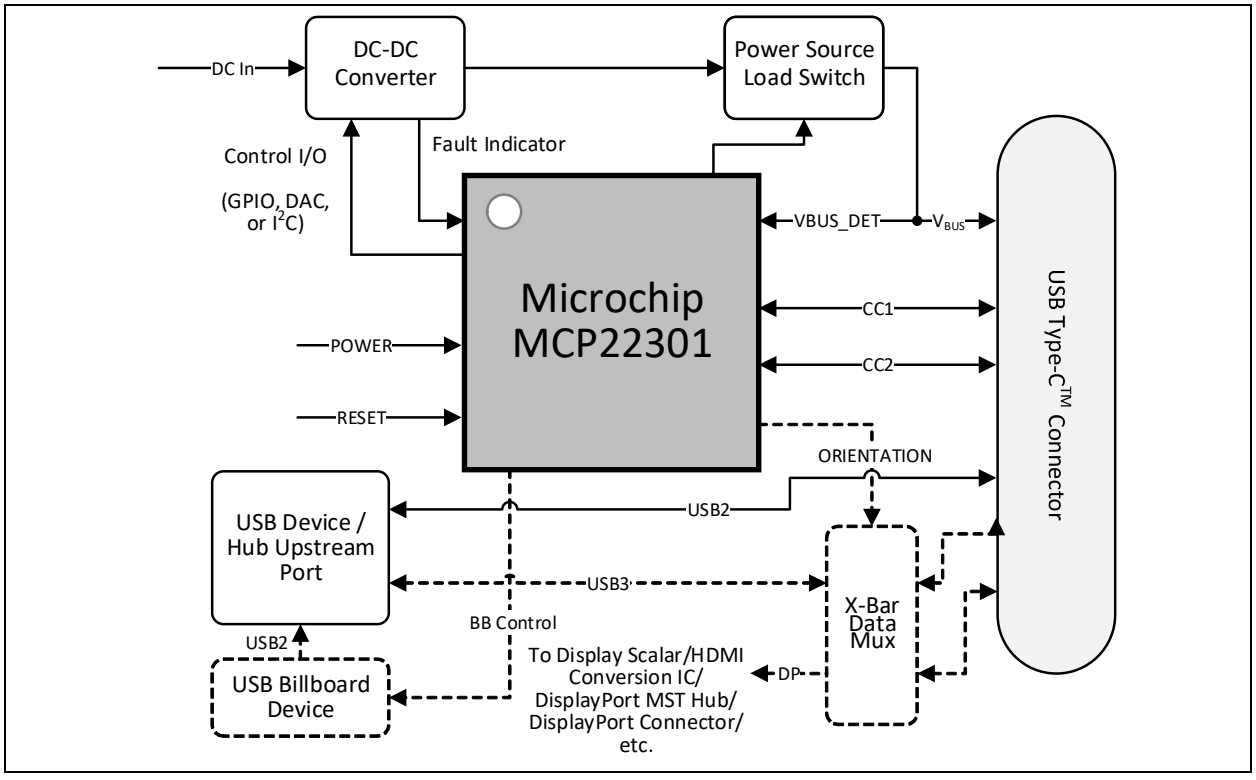

FIGURE 2-5: *System Block Diagram - Dual Role Power/Data Application (High Voltage Source, 5V @ 0A Sink).*

© 2024 Microchip Technology Inc. and its subsidiaries

2.3.6 2-PORT DUAL ROLE POWER/DATA APPLICATION 'CHARGE-THROUGH ADAPTER'

An example of a charge through adapter/mobile dock device is shown in Figure 2-6. In this example, the 'Charger Input Port' may pass a high voltage power profile through the system to an attached mobile device. If a charger is not inserted into the 'Charger Input Port'. then the mobile device may power the adapter with 5V power.

A cross-bar switch is shown for routing DisplayPort Alternate Mode and USB3 data to the connector, allowing port expansion and video display.

An LDO is shown connected to a power OR circuit to ensure power to the system is available regardless of which Type-C port is supplying power to the system. The LDO should be selected to operate at the maximum supported charge-through voltage.

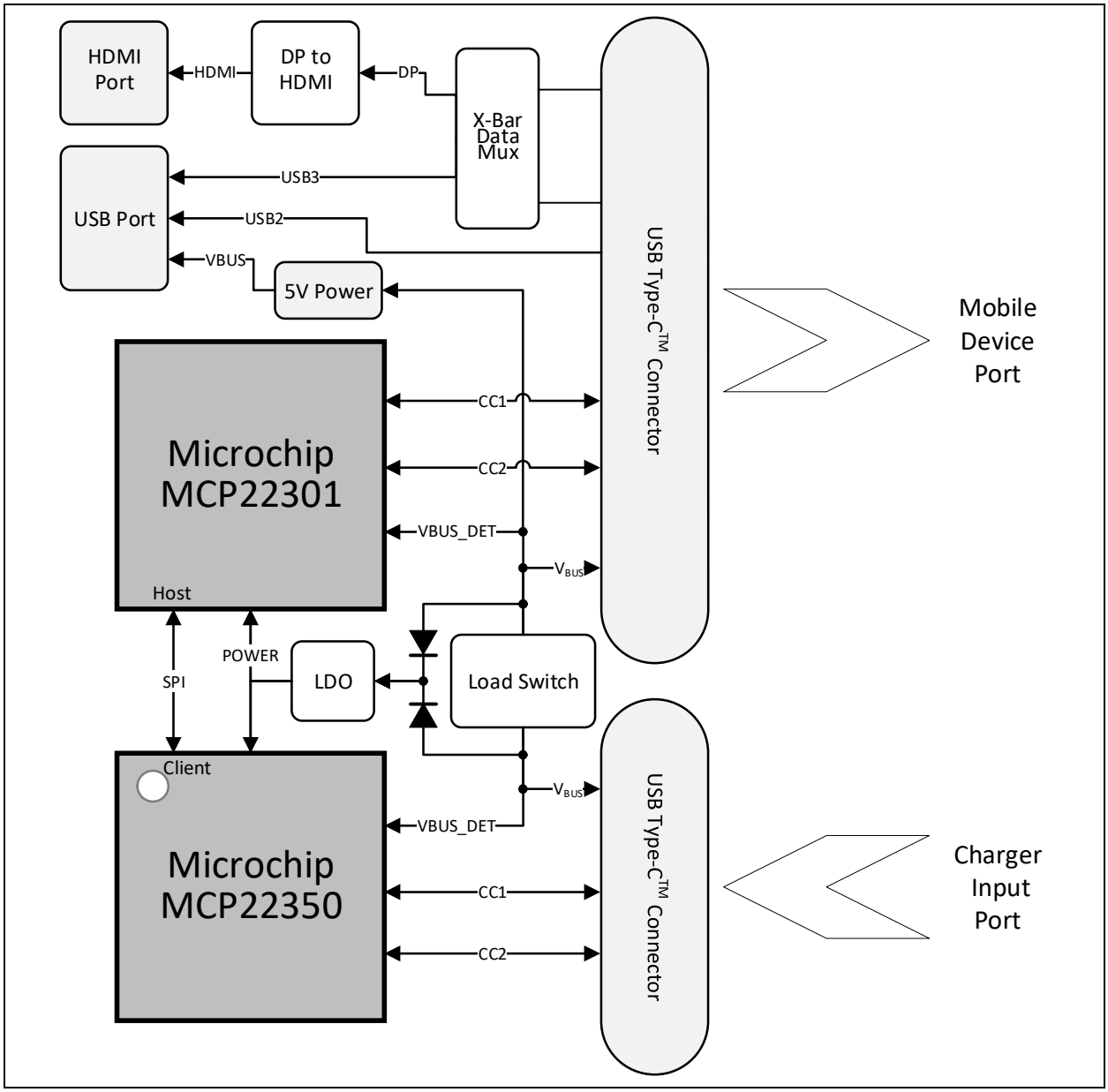

FIGURE 2-6: *System Block Diagram - 2-Port Dual Role Power/Data Application 'Charge-Through Adapter'.*

3.0 PIN DESCRIPTIONS AND CONFIGURATION

3.1 Pin Assignments

The device pin diagram for the MCP22301 can be seen in Figure 3-1. Table 3-1 provides a MCP22301 pin assignment table. The internal bonding diagram (simplified) is shown in Figure 3-2. Pin descriptions are provided in Section 3.2, "Pin Descriptions".

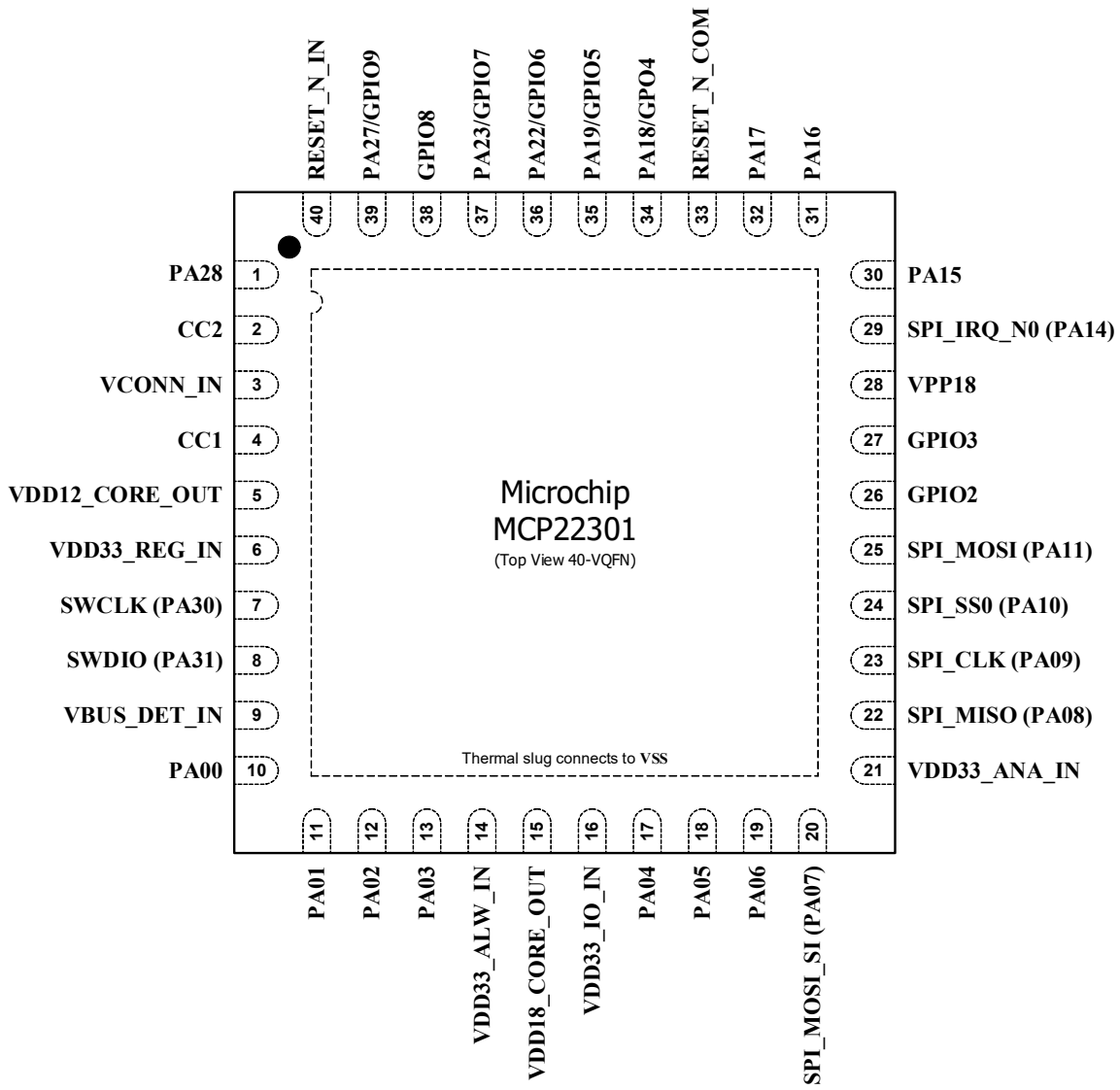

Note: Exposed pad (VSS) on bottom of package must be connected to ground.

FIGURE 3-1: *MCP22301 Pin Assignments (Top View).*

© 2024 Microchip Technology Inc. and its subsidiaries

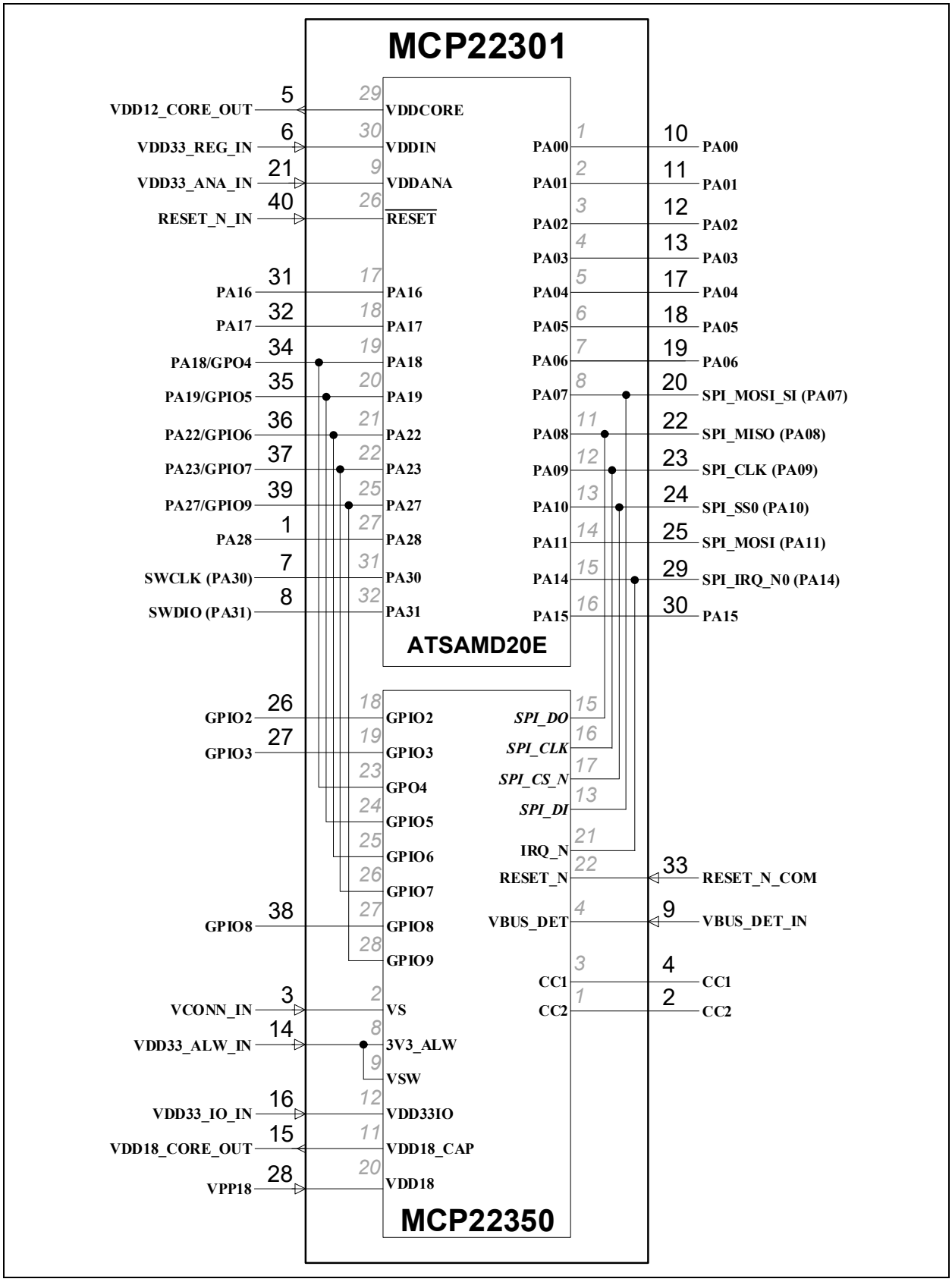

FIGURE 3-2: *Simplified Internal Bonding Diagram.*

TABLE 3-1: MCP22301 PIN ASSIGNMENTS

Pin	Pin Name	Bond to SAMD20E	Bond to MCP22350
1	PA28	PA28	-
2	CC2	-	CC2
3	VCONN_IN	-	VS
4	CC1	-	CC1
5	VDD12_CORE_OUT	VDDCORE	-
6	VDD33_REG_IN	VDDIN	-
7	SWCLK (PA30)	PA30	-
8	SWDIO (PA31)	PA31	-
9	VBUS_DET_IN	-	VBUS_DET
10	PA00	PA00	-
11	PA01	PA01	-
12	PA02	PA02	-
13	PA03	PA03	-
14	VDD33_ALW_IN	-	3V3_ALW & VSW
15	VDD18_CORE_OUT	-	VDD18_CAP
16	VDD33_IO_IN	-	VDD33IO
17	PA04	PA04	-
18	PA05	PA05	-
19	PA06	PA06	-
20	SPI_MOSI_SI (PA07)	PA07	SPI_DI
21	VDD33_ANA_IN	VDDANA	-
22	SPI_MISO (PA08)	PA08	SPI_DO
23	SPI_CLK(PA09)	PA09	SPI_CLK
24	SPI_SS0 (PA10)	PA10	SPI_CS_N
25	SPI_MOSI (PA11)	PA11	-
26	GPIO2	-	GPIO2
27	GPIO3	-	GPIO3
28	VPP18	-	VDD18
29	SPI_IRQ_N0 (PA14)	PA14	IRQ_N
30	PA15	PA15	-
31	PA16	PA16	-
32	PA17	PA17	-
33	RESET_N_COM	-	RESET_N
34	PA18/GPO4 (Note 1)	PA18	GPO4
35	PA19/GPIO5 (Note 1)	PA19	GPIO5
36	PA22/GPIO6 (Note 1)	PA22	GPIO6
37	PA23/GPIO7 (Note 1)	PA23	GPIO7
38	GPIO8	-	GPIO8
39	PA27/GPIO9 (Note 1)	PA27	GPIO9
40	RESET_N_IN	$\overline{\text{RESET}}$	-
Exposed Pad (VSS) must be connected to ground.			

Note 1: This pin is double bonded to the internal SAMD20E and MCP22301 and should not be simultaneously driven by both sources under normal use cases.

© 2024 Microchip Technology Inc. and its subsidiaries

3.2 Pin Descriptions

This section details the functions of the various device signals.

TABLE 3-2: PIN DESCRIPTIONS

Name	Symbol	Buffer Type	Description
USB Type-C™			
Configuration Channel 1	**CC1**	AIO	Configuration Channel (CC) used in the discovery, configuration and management of connections across a USB Type-C cable. *(CC1 in MCP22350)*
Configuration Channel 2	**CC2**	AIO	Configuration Channel (CC) used in the discovery, configuration and management of connections across a USB Type-C cable. *(CC2 in MCP22350)*
VBUS Detection	**VBUS_DET_IN**	AIO	Scaled down version of VBUS input used for VBUS detection. Tie this signal to VBUS via a resistor divider. *(VBUS_DET in MCP22350)*
SPI Interface			
SPI Clock	**SPI_CLK**	IS	SPI clock. The maximum supported SPI clock frequency is 8 MHz. *(SPI_CLK in MCP22350 and PA09 in SAMD20)*
SPI Data Host In / Client Out	**SPI_MISO**	I/O8	SPI data host in, client out. *(SPI_DO in MCP22350 and PA08 in SAMD20)*
SPI Data Host Out / Client In	**SPI_MOSI**	O2	SPI data host out / client in. This pin must be connected to **SPI_MOSI_SI** for proper operation. *(PA11 in SAMD20)*
SPI Data Client In	**SPI_MOSI_SI**	IS	SPI data client in. This pin must be connected to **SPI_MOSI** for proper operation. *(SPI_DI in MCP22350 and PA07 in SAMD20)*
SPI Chip Enable 0	**SPI_SS0**	IS	Active low SPI chip enable input for MCP22301. *(SPI_CS_N in MCP22350 and PA10 in SAMD20)*
SPI Interrupt 0	**SPI_IRQ_N0**	I	SPI interrupt indicating request for service from optional external MCP22350. *(IRQ_N in MCP22350 and PA14 in SAMD20)*
Serial Wire Debug Interface			
Serial Wire Debug Clock	**SWCLK**	IS	Serial wire debug clock. *(PA30 in SAMD20)*
Serial Wire Debug Data	**SWDIO**	I/O	Serial wire debug bidirectional data. *(PA31 in SAMD20)*
Miscellaneous			
System Reset Input	**RESET_N_IN**	I	Active low SAMD20 system reset input. This reset is used for reset of the SAMD20 portion of the MCP22301 by a companion MCU. *(RESET in SAMD20)*
System Reset Common	**RESET_N_COM**	IS	Active low MCP22350 system reset input. This reset is used for reset of the MCP22350 portion of the MCP22301 by a companion MCU. *(RESET_N in MCP22350)*
General Purpose I/Os			
Misc. SAMD20E I/O	**PA00, PA01, PA02, PA03, PA04, PA05, PA06, PA15, PA16, PA17, PA18, PA19, PA22, PA23, PA27, PA28**	I/O	Refer to SAMD20E Datasheet for pin function, peripheral detail, and characteristics. *(PAxx in SAMD20)* **Note:** **PA18**, **PA19**, **PA22**, **PA23**, and **PA27** are multiplexed with MCP22350 GPIOs. Refer to Table 3-1 for more information.

TABLE 3-2: PIN DESCRIPTIONS (CONTINUED)

Name	Symbol	Buffer Type	Description
MCP22350 GPIO	**GPIO2, GPIO3, GPO4, GPIO5, GPIO6, GPIO7, GPIO8, GPIO9**	I/O	Refer to MCP22350 Datasheet for pin function, peripheral detail, and characteristics. *(GPIOx, GPO4 in MCP22350)* **Note:** **GPO4**, **GPIO5**, **GPIO6**, **GPIO7**, and **GPIO9** are multiplexed with SAMD20 GPIOs. Refer to Table 3-1 for more information.
Power/Ground			
+5V Port Power Switch Input	**VCONN_IN**	P	+5V VCONN FET power source. *(VS in MCP22350)*
+3.3V I/O Power Supply Input	**VDD33_IO_IN**	P	+3.3V I/O power supply input. *(VDD33IO in MCP22350)*
+3.3V Analog Power Supply Input	**VDD33_ANA_IN**	P	+3.3V analog power supply input. *(VDDANA in SAMD20)*
+3.3V Always Supply Input	**VDD33_ALW_IN**	P	+3.3V always supply input. *(3V3_ALW & VSW in MCP22350)* **Note:** This pin must be connect to a 2.2 uF capacitor to ground.
+3.3V Regulator Power Supply Input	**VDD33_REG_IN**	P	+3.3V regulator power supply input. *(VDDIN in SAMD20)*
+1.8V Core Voltage Power Supply Input	**VPP18**	P	+1.8V core voltage power supply input. *(VDD18 in MCP22350)*
+1.8V Digital Core Power Supply Output	**VDD18_CORE_OUT**	P	+1.8V digital core power supply output. This signal must be connected to a 1uF capacitor to ground for proper operation. *(VDD18_CAP in MCP22350)*
+1.2V Core Power Supply Output	**VDD12_CORE_OUT**	P	+1.2V core power supply output. This signal must be connected to a 1uF capacitor to ground for proper operation. *(VDDCORE in SAMD20)*
Ground	**VSS**	P	Ground pins.

© 2024 Microchip Technology Inc. and its subsidiaries

NOTES:

© 2024 Microchip Technology Inc. and its subsidiaries

4.0 FUNCTIONAL DESCRIPTIONS

This section provides functional descriptions of the following:

- Serial Peripheral Interface (SPI)
- Power States
- Cable Plug Orientation and Detection
- Baseband CC Interface (BCI)
- Power Delivery MAC
- The BIST RX block contains a PRBS generator and bit error detection logic. BIST RX is used only during the BIST Receiver Test.

4.1 Serial Peripheral Interface (SPI)

The MCP22301 integrates a SPI host/client controller which includes the following features:

- Full-duplex, four-wire interface (**SPI_MISO**, **SPI_MOSI**, **SPI_SCK**, **SPI_SS**)
- Single-buffered transmitter, double-buffered receiver
- Supports all four SPI modes of operation
- Single data direction operation allows alternate function on **SPI_MISO** or **SPI_MOSI** pin
- Selectable LSB- or MSB-first data transfer
- Host operation:
  - Serial clock speed, $f_{SCK}=1/t_{SCK}$ (Note)
  - 8-bit clock generator
- Client operation:
  - Serial clock speed, $f_{SCK}=1/t_{SSCK}$(Note)
  - Optional 8-bit address match operation
  - Operation in all sleep modes

Note:	For t_{SCK} and t_{SSCK} values, refer to Section 5.5.2, "SPI Timing".

The SPI is a high-speed synchronous data transfer interface which allows high-speed communication between the device and peripheral devices. The SPI can operate as a host or client. As a host, the SPI initiates and controls all data transactions. The SPI is single buffered for transmitting and double buffered for receiving.

When transmitting data, a Data register is loaded with the next character to be transmitted during the current transmission. When receiving, the data is transferred to the two-level receive buffer, and the receiver is ready for a new character.

The SPI transaction format is shown in Figure 4-1. Each transaction can contain one or more characters. The character size is configurable, and can be either 8 or 9 bits.

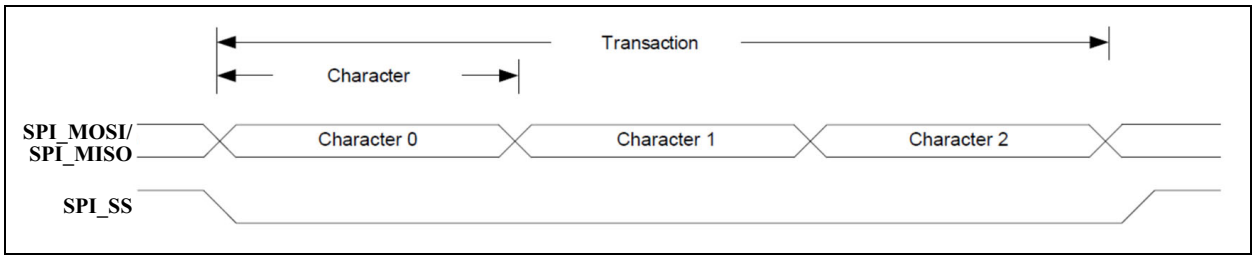

FIGURE 4-1: *SPI Transaction Format.*

The SPI host pulls the client select line (**SPI_SS**) of the desired client low to initiate a transaction. The host and client prepare data to send via their respective shift registers, and the host generates the serial clock on the **SPI_SCK** line.

Data is always shifted from host to client on the Host Output Client Input line (**SPI_MOSI**); data is shifted from host to client on the Host Input Client Output line (**SPI_MISO**).

Each time character is shifted out from the host, a character will be shifted out from the client simultaneously. To signal the end of a transaction, the host will pull the **SPI_SS** line high.

© 2024 Microchip Technology Inc. and its subsidiaries

4.2 Power States

The device supports the following power states, as defined in their respective sub-sections:

- STANDBY
- ATTACHED IDLE (FRS Enabled)
- ATTACHED IDLE (FRS Disabled)
- ACTIVE

4.2.1 STANDBY

STANDBY is the lowest power functional state of the device. The majority of the device is powered off in this state. The internal CC comparator and 20 KHz oscillator are enabled in this state as well as requisite analog components (1.8V LDO, PORs, Biases, etc).

The CC lines are constantly monitored for an attach condition which shall result in an interrupt assertion to the host. If an attachment has been made, this state can detect a change in the partner's advertisement as well as a detach.

STANDBY is the power state that the MCP22301 device will be in when in USB Type-C™ Unattached.SRC.

4.2.2 ATTACHED IDLE (FRS ENABLED)

In this state, a USB Type-C™ device is connected and the USB PD bus is idle (no USB packets in transit). The CC signals are constantly being monitored for packet transmission and Fast Role Swap (FRS) signal detection is enabled.

4.2.3 ATTACHED IDLE (FRS DISABLED)

In this state, a USB Type-C™ device is connected and the USB PD bus is idle (no USB packets in transit). The CC signals are constantly being monitored for packet transmission and Fast Role Swap (FRS) signal detection is disabled.

4.2.4 ACTIVE

This state defines the condition of the device after an attachment occurred. In this state, Power Delivery communication is supported. This state is also used for any condition in which the 48 MHz Relaxation Oscillator must be enabled, such as when it is desired to debounce a GPIO within the micro-second range.

When transmitting a Power Delivery packet, an additional 5 mA may be consumed. Additional power consumption results from enabling the OCS comparator, VBUS comparator and other modules. When VCONN FETs are enabled, there is an additional 70 mW of power consumption.

This section details the functions that control and monitor the CC pins, monitor the **VBUS_DET** pin, control the VCONN FETs, and sample the **CFG_SEL** pin.

4.3 Cable Plug Orientation and Detection

4.3.1 CC COMPARATOR

The device integrates a comparator and DAC circuit to implement Type-C attach and detach functions. It supports up to eight programmable thresholds for attach detection between UFP and DFP. When operating as a UFP, the device supports detecting changes in the DFP's advertised thresholds to determine current sourcing capability. The default nominal values for the thresholds detected by the CC comparators are:

- 0.20 V
- 0.40 V
- 0.66 V
- 0.80 V
- 1.23 V
- 1.60 V
- 2.60 V
- 3.0 V Proprietary Mode

TABLE 4-1: CABLE DETECT SUMMARY

Parameter	Threshold CSR	Description	Min	Typ	Max
DFP_ACT_DEF	CC_THR0	Detecting an active cable when configured as DFP and advertising default USB current.	—	0.20 V	—
UFP_DFP_DEF	CC_THR0	Detecting DFP attach when configured as UFP and DFP is advertising default USB current.	—	0.20 V	—
DFP_ACT_1A5	CC_THR1	Detecting an active cable when configured as DFP and advertising 1.5A.	—	0.40 V	—
UFP_DFP_1A5	CC_THR2	Detecting DFP attach when configured as UFP and DFP is advertising 1.5A.	—	0.66 V	—
DFP_ACT_3A0	CC_THR3	Detecting an active cable when configured as DFP and advertising 3.0A.	—	0.80 V	—

© 2024 Microchip Technology Inc. and its subsidiaries

TABLE 4-1: CABLE DETECT SUMMARY (CONTINUED)

Parameter	Threshold CSR	Description	Min	Typ	Max
UFP_DFP_3A0	CC_THR4	Detecting DFP attach when configured as UFP and DFP is advertising 3.0A.	—	1.23 V	—
DFP_UFP_DEF	CC_THR5	Detecting UFP attach when configured as DFP advertising default USB current.	—	1.60 V	—
DFP_UFP_1A5	CC_THR5	Detecting UFP attach when configured as DFP advertising 1.5A.	—	1.60 V	—
DFP_UFP_3A0	CC_THR6	Detecting UFP attach when configured as DFP advertising 3.0A.	—	2.60 V	—

The following tables summarizes the expected thresholds to be matched for various configurations.

TABLE 4-2: DFP CC MATCH SUMMARY

CC State	CC THR0	CC THR1	CC THR2	CC THR3	CC THR4	CC THR5	CC THR6	CC THR7
Advertise Default USB Current and connected to powered cable	0	0	0	0	0	0	0	0
Advertise 1.5 A and connected to powered cable	0	0	0	0	0	0	0	0
Advertise 3.0 A and connected to powered cable	0	0	0	0	0	0	0	0
Advertise Default USB Current and connected to UFP	1	0	0	0	0	0	0	0
Advertise 1.5 A and connected to UFP	0	1	0	0	0	0	0	0
Advertise 3.0 A and connected to UFP	0	0	0	1	0	0	0	0
Advertise Default USB Current and no connect (vOpen)	1	0	0	0	0	1	0	0
Advertise 1.5 A and no connect (vOpen)	0	1	0	0	0	1	0	0
Advertise 3.0 A and no connect (vOpen)	0	0	0	1	0	0	1	0
Proprietary Mode and no connect (vOpen)	0	0	0	0	0	0	0	1

© 2024 Microchip Technology Inc. and its subsidiaries

TABLE 4-3: UFP CC MATCH SUMMARY

CC State	CC THR0	CC_ THR1	CC THR2	CC THR3	CC THR4	CC THR5	CC THR6	CC THR7
Powered cable detected.	0	0	0	0	0	0	0	0
No Connect (SNK.Open)	0	0	0	0	0	0	0	0
DFP Connected and advertising default USB current	1	0	0	0	0	0	0	0
DFP Connected and advertising 1.5 A	1	0	1	0	0	0	0	0
DFP Connected and advertising 3.0 A	1	0	1	0	1	0	0	0
DFP Connected and advertising proprietary current	1	0	1	0	1	0	0	1

4.3.2 DFP OPERATION

The device implements current sources to advertise current charging capabilities on both CC pins when operating as a DFP.

When a UFP connection is established, the current driven across the CC pins creates a voltage across the UFP's Rd pull-down that can be detected by the integrated CC comparator. The voltages monitored are summarized in Table 4-4. When connected to an active cable, an alternative pull-down (Ra) appears on the CC pin.

The DFP also integrates two 5V FETs for implementing the VCONN function. This is further discussed in Section 4.3.9, "VCONN Operation".

TABLE 4-4: SOURCE DETECTION

CC1	CC2	Connection State	CC Comparator State	VBUS	VCONN
Open	Open	Nothing Attached	Monitor both CC pins for attach	Off	Off
Rd	Open	UFP Attached	Monitor **CC1** for detach	On	Off
Open	Rd	UFP Attached	Monitor **CC2** for detach	On	Off
Ra	Open	Powered Cable, No UFP attached	Monitor **CC2** for UFP attach. Monitor **CC1** for cable detach.	Off	Off
Open	Ra	Powered Cable, No UFP attached	Monitor **CC1** for UFP attach. Monitor **CC2** for cable detach.	Off	Off
Ra	Rd	Powered Cable, UFP attached	Monitor **CC2** for UFP detach. **CC1** is not monitored for detach.	On	On
Rd	Ra	Powered Cable, UFP attached	Monitor **CC1** for UFP detach. **CC2** is not monitored for detach.	On	On
Rd	Rd	Debug accessory mode attached	Monitor both CC pins for detach	Off	Off
Ra	Ra	Audio accessory mode attached.	Monitor both CC pins for detach	Off	Off

4.3.3 RP CURRENT SOURCES

In order to advertise the current charging capabilities of the device via the integrated port power controller or external power circuit, Rp current sources are used. The current source can be selected by software. Table 4-5 summarizes the values supported by the current sources in regards to the programmed value.

TABLE 4-5: RP CURRENT SOURCES

DFP Advertisement	Current source (1.7V to 5.5V)	RPx Value
Disabled		00b
Default USB Power	80 µA +/-20%	01b
1.5A @ 5V	180 µA +/-8%	10b
3.0A @ 5V	330 µA +/-8%	11b

© 2024 Microchip Technology Inc. and its subsidiaries

The current source coupled with the CC pins for RP advertisement is also used for sampling the **CFG_SEL** pin. When the **CFG_SEL** pin is sampled, current is steered away from the CC pins and no RP value is advertised.

4.3.4 UFP OPERATION

When operating as a UFP, the device applies an Rd pull-down on both CC lines and waits for a DFP connection from the assertion of VBUS. The CC comparator is used to determine the advertised current charger capabilities supported by the DFP.

4.3.5 DRP OPERATION (LEGACY)

In this configuration, software utilizes the device to alternate between a Source and Sink advertisement with an interval of tDRP per the USB Type-C™ Specification.

4.3.6 DRP OFFLOAD

DRP offload enables the device to manage the DRP toggle. This is beneficial as it allows the host CPU to remain in a low power state until a connection is detected.

DRP offload toggles between Source and Sink advertisement by alternating between enabling Rp current sources and Rd pull-downs for a period of tDRP (DRP Time Register). The duty cycle between Source and Sink advertisement is determined by the DRP Duty Cycle Register. The DRP Time Register may be written by firmware or generated automatically via a pseudo random number generator. The latter approach should be used to reduce the probability of collisions when connecting. It is selectable whether the DRP cycle shall first advertise UFP or DFP.

A connection is detected after a successful debounce for a period defined by the Match Debounce Register. VBUS is checked to be below vSafe0v for the DFP case. This results in **IRQ_N** assertion and automatic disablement of the DRP toggle. Firmware must further debounces for the period tPDDebounce before determining if a valid match is present. If a match has not occurred, firmware will enable DRP again.

A pseudo random number generator, implemented via a LFSR, is utilized to generate the DRP period. The LFSR operates off of the 20 KHz clock and updates every 100 µs when enabled.

Hardware limits the total DRP period to be between 50 ms and 100 ms in order to comply with the USB Type-C™ specification.

4.3.7 COLLISION AVOIDANCE

An alternative mode of operation is required to enable the CC detection circuit to facilitate software implementation of collision detection which was incorporated into version 3.0 of the USB PD Specification.

In order to avoid message collisions due to asynchronous Messaging (AMS) sent from the Sink, the Source sets Rp to SinkTxOk (3A@5V) to indicate to the Sink that it is OK to initiate an AMS. When the Source wishes to initiate an AMS it sets Rp to SinkTxNG (1.5A@5V). When the Sink detects that Rp is set to SinkTxOk it may initiate an AMS. When the Sink detects that Rp is set to SinkTxNG it shall not initiate an AMS and shall only send Messages that are part of an AMS the Source has initiated.

When operating as a Sink, a mechanism is required for quickly determining whether the Source is advertising SinkTxNG or SinkTxOK on Rp.

A collision avoidance mechanism exists to enable software to instruct the device to sample only a single threshold on a single CC pin. This results in a cycle through both thresholds taking only 100 µs, making it easier for software to meet the timing constraints mandated by SinkTxOk in the specification.

4.3.8 FAST ROLE SWAP (FRS)

This feature is used to detect when a partner source has lost power. Upon detection of FRS signaling, the “Old Sink” transitions to be a Source and begins supplying VBUS.

When operating as a Sink, the FRS mode of operation enables detection of FRS signaling. Detection results in **IRQ_N** assertion and this event may also be mapped as a PIO override source. When operating as a Source, upon detection of loss of power, the device will transmit FRS signaling. This is initiated by either assertion of a selected PIO or a CSR write.

The following FRS related features are supported:

- Ability to detect reception of FRS signaling
- High bandwidth and current boost mode for CC comparator to increase sampling frequency
- Interrupt, and PIO, assertion upon FRS detection
- PIO override support for FRS detection as a source
- Ability to initiate FRS signaling via GPIO assertion or register write.
- Control 5 Ohm (Rsw) pull-down resistor

4.3.8.1 FRS Sink Operation

When operating as a Sink, the device is configured to detect FRS signaling by setting FRS Detect Enable (FRS_DET_EN) in FRS Control Register. The CC detection logic is programmed to detect three thresholds (SinkTxOK, SinkTXNG, FRSWAP) and samples each threshold in round robin fashion. The sampling rate is determined by CC Sample Clock Register.

When a match is detected on FRSWAP threshold, the CC detection logic will “park” at this threshold and continue monitoring the output of the comparator. While “parked” the output of the CC comparator will be

© 2024 Microchip Technology Inc. and its subsidiaries

sampled at an increased rate of 12 MHz. This higher sampling rate will prevent PD messages from inadvertently looking like FRS signaling which will happen on occasion when the sampling rate is similar or slower than the ~270 kbps rate of PD messages.

It will continue debouncing for the amount of time specified in FRS CC Debounce Register. The FRSWAP threshold is indicated by FRS Threshold Select Register.

If the debounce is successful, then the FRS_RCV_STS interrupt is asserted and the CC detection logic resumes sampling all enabled thresholds. If the FRS debounce fails, the CC detection logic resumes sampling all enabled thresholds.

In this mode of operation the CC Comparator operates at a faster rate in order to minimize the FRS detection latency. This is enabled by placing this the comparator into a high bandwidth mode.

After detecting the FRS signaling, the “old Sink” must start supplying vSafe5V at USB Type-C™ current VBUS no later than tSrcFRSwap (150 µs) after VBUS has dropped below vSafe5V. This must be accomplished via circuitry external to the device.

Note:	The upper threshold used for vSafe5V should be used for determining when VBUS has dropped below vSafe5v to help meet tSrcFRSwap requirement.

Note:	Matching of a VBUS threshold may be selected as a source to a PIO override. Additionally, VBUS threshold match ANDed with FRS signal detect may also be used as a PIO override source.

4.3.8.2 FRS Source Operation

The initial Source shall signal a FRS request by driving the CC pin to ground with a resistance of less than 5 Ohms for a period defined by FRS Transmission Length Register. The FRS request signaling is initiated by either a CSR write or GPIO assertion.

The former case is implemented by setting the FRS Request (FRS_REQ_EN) bit in FRS Control Register. This bit self clears after the FRS request is transmitted. For the latter case, the PIO is selected by the FRS Request PIO (FRS_REQ_PIO) field in FRS Control Register.

Transmission of FRS signaling will take precedence over PD MAC TX communication. The FRS PD resistor is enabled in tandem on the CC pin determined by FRS CC Select (FRS_CC_SEL) in FRS Control Register. This configuration remains until FRS transmission has completed.

4.3.8.3 Dead Battery (MCP22301-2 Only)

The MCP22301-2 device includes two variations of the Rd resistor implementation: Rd (Dead Battery) and Rd (Trimmed). The CC pins are configured to present either Hi-Z or an untrimmed Rd pull-down resistance when connected to a DFP advertising a pull-up resistance.

Figure 4-2 illustrates the configuration for supporting dead battery cases. The UFP pull-up activates the FET in series with RD_DB and enables the untrimmed dead battery pull-down.

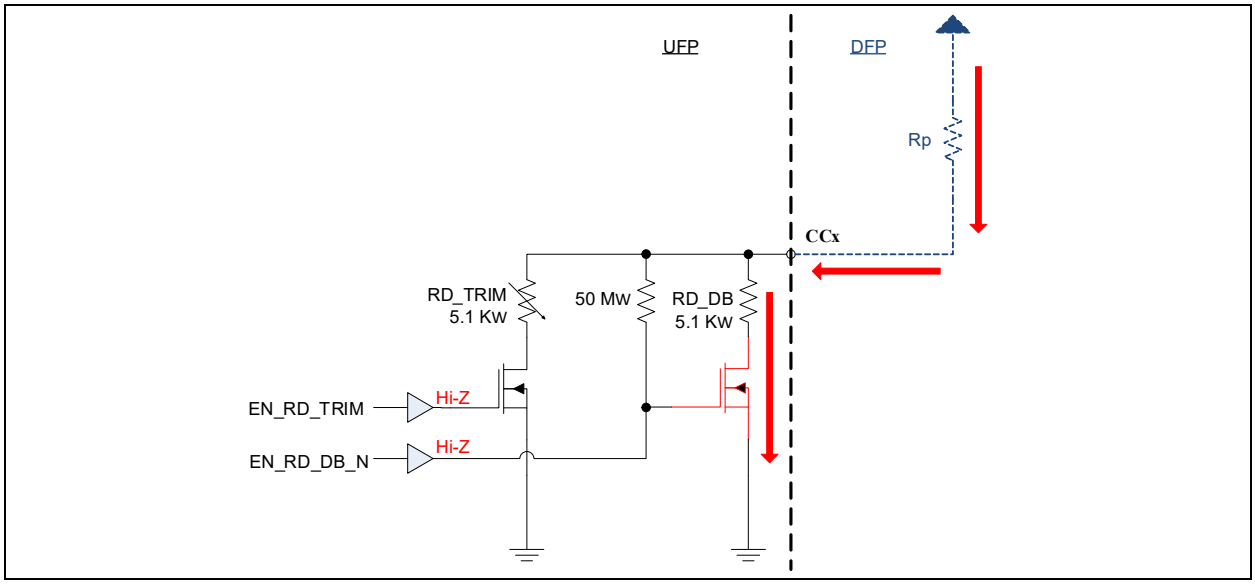

FIGURE 4-2: *CC RD (Dead Battery).*

Figure 4-3 illustrates operation after the UFP has been powered over VBUS by the DFP. After the device is powered, EN_RD_DB asserts by default to keep the RD_DB pull-down activated.

Upon powering the host CPU, software simultaneously deasserts EN_RD_DB and asserts EN_RD_TRIM. Going forward the device presents RD_TRIM.

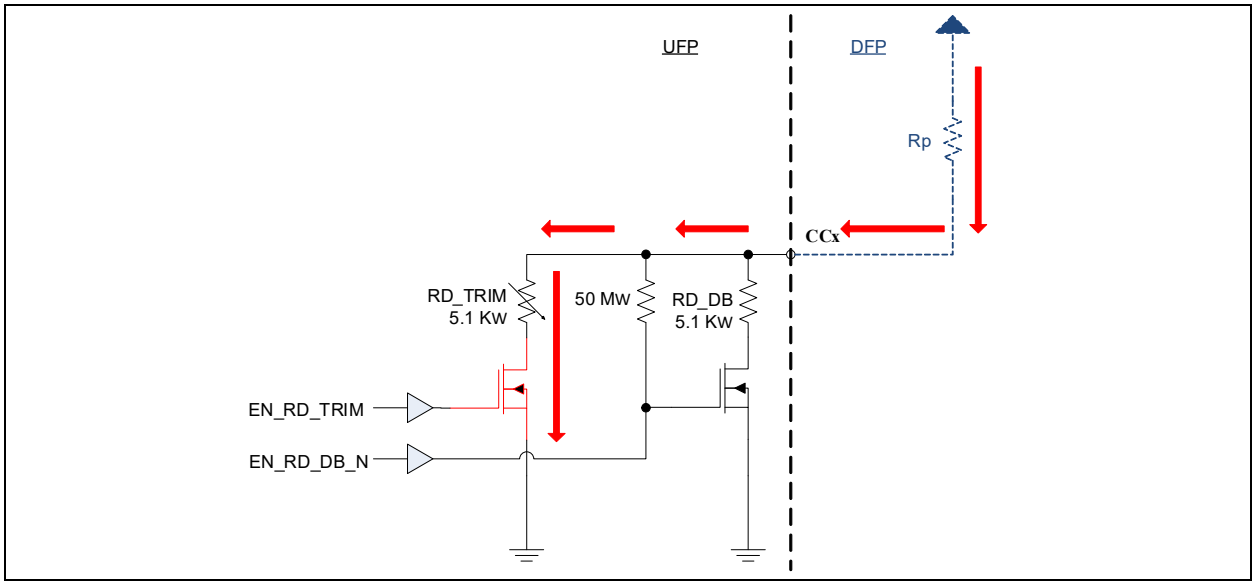

FIGURE 4-3: *CC RD (Trim).*

The Rd resistor presented, trimmed or untrimmed, is controlled by the CC1 and CC2 Pull-Down Values in the CC Control Register (CC_CTL). These register fields serve the basis for the EN_RD_TRIM and EN_RD_DB_N control signals depicted.

4.3.9 VCONN OPERATION

VCONN is a 5V supply that is used to power circuitry in the USB Type-C™ plug, which is required to implement Electronically Marked Cables. By default, the DFP always sources VCONN when connected to an active cable. However, this may be changed by software.

The VCONN FETs are enabled/disabled by software via the VCONN1 Control and VCONN2 Control control bits in the CC Control Register (CC_CTL).

Note:	It is not envisioned to ever enable both FETs simultaneously.

VCONN is monitored for an over current condition via an internal monitoring circuit. A VCONN over current condition is recognized when the event persists for a time longer than specified. When an over-current VCONN event is detected, an interrupt asserts. The device may be configured to automatically disable the VCONN FET upon detection of a CC1/CC2 Back-Drive Error or VCONN Discharge Error. In the event of the detection of a debounced over-current VCONN event, the enabled VCONN FET will be disabled.

4.3.10 VBUS DETECTION

The device implements a comparator for determining when VBUS is within a programmed range, vSafe5V, or vSafe0v. VBUS is divided down externally via a 1:9 resistor divider to generate **VBUS_DET_IN**. **VBUS_DET_IN** is compared with an 8-bit threshold generated by an integrated DAC. The comparator is also shared by the **CFG_SEL** pin which is sampled automatically after a system reset.

Figure 4-4 illustrates the **VBUS_DET_IN** circuit. In a typical use case, **VBUS_DET_IN** thresholds are programmed to track the following voltage ranges as defined in Table 4-5.

Note:	Table 4-5 illustrates the values of **VBUS_DET_IN** utilizing +/-1% accurate resistors where R1 is 10 kΩ and R2 is 90 kΩ.

© 2024 Microchip Technology Inc. and its subsidiaries

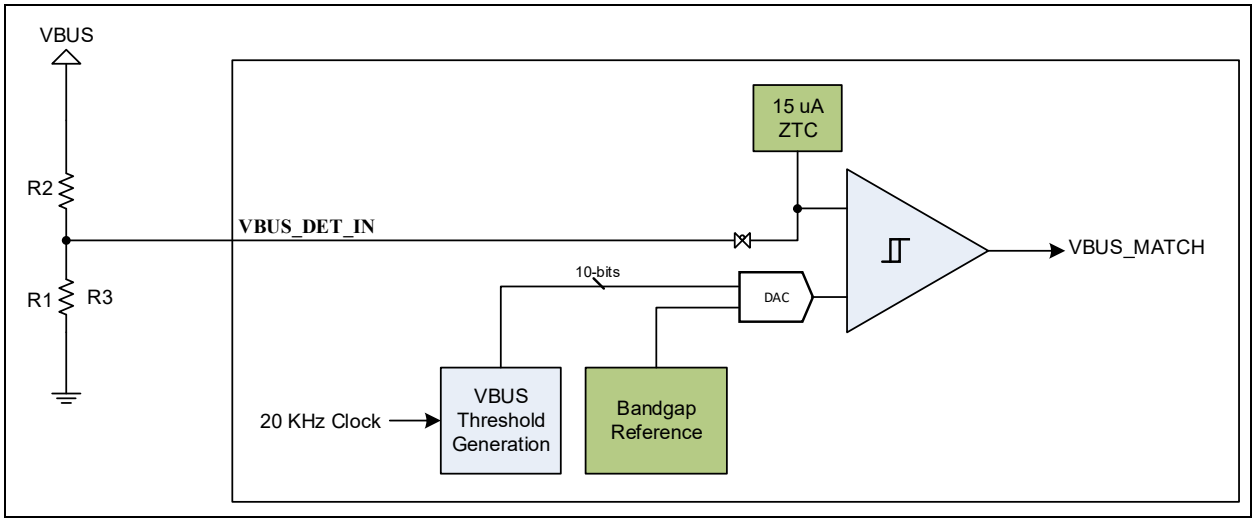

FIGURE 4-4: *VBUS_DET_IN Comparator.*

For a DFP, the VBUS comparator is useful to detect when VBUS is within the desired range per PD negotiations. This is the case when VBUS is generated by a source external to the device.

For a UFP, the VBUS comparator is required to determine when a DFP is attached or detached. It may also use the comparator to determine when VBUS is within a new voltage range negotiated via PD.

If supported, the ranges 8V, 12V and 20V may be programmed in VBUS Threshold 2 and VBUS Threshold 3 registers. Likewise 5V range, vSafe5v, can be programmed in VBUS Threshold 0 and VBUS Threshold 1 registers.

The threshold for vSafe0V is programmable.

VBUS_DET_IN monitoring logic operates off of the 20 KHz oscillator which cycles through each threshold. Including vSafe0v, a total of five values are compared.

The VBUS Match Register (VBUS_MATCH) indicates when the value on **VBUS_DET_IN** is higher than the corresponding programmed threshold and can therefore be used to determine if VBUS is in the desired range.

A change in the state of the VBUS match may trigger assertion of the **IRQ_N** pin if appropriately configured.

4.4 Baseband CC Interface (BCI)

The device integrates a Baseband CC Interface (BCI) to facilitate USB Power Delivery communication. This module bridges between the PD MAC/BMC and the analog front end. Baseband communication is initiated by the PD MAC, which interfaces to the BCI. The BCI implements the digital functions required to control TX baseband components.

4.4.1 BASEBAND TX DATA-FLOW

The key responsibility of the BCI is to generate the wave form required for baseband communication. To this end, the BMC has a group of eight registers that define the Lo-Hi and Hi-Lo transitions for the generated BMC signal.

When instructed to transition from Lo-Hi, the BCI steps through all BB TX Rise Registers. Likewise when instructed to transition from Hi-Lo, the BCI steps through all BB TX Fall Registers.

Note:	The user may replicate values if it is desired to use less than twelve unique values for this purpose.

4.4.2 BASEBAND RX DATA-FLOW

Baseband RX data is received by the BCI from the RX analog front end where it is compared to a threshold programmed by software. The CC RX DAC Value defines the trip point used for reception of baseband data. The field shall be programmed to be 175 mV below the RX Eye center, as defined in the PD Specification for the mode in which the device is operating (Sourcing Power, Sinking Power, Power Neutral).

4.5 Power Delivery MAC

The PD MAC implements certain features of the protocol layer and physical layer of the Universal Serial Bus Power Delivery Specification. On one end the PD MAC interfaces to the software implementing the bulk of protocol and higher level layers and on the other end it interfaces to a BMC encoder / decoder module.

In addition to the normal TX and RX functions, the PD MAC implements the test mode logic defined in the USB PD specification (BIST).

© 2024 Microchip Technology Inc. and its subsidiaries

The PD MAC supports the following features:

- Automatic TX Mode for packet framing and CRC32 insertion.
- Raw TX Mode for bit level packet control.
- Automatic GoodCRC response to received messages.
- Automatic BIST Error Count Message in BIST RX Mode.
- GoodCRCTimer implementation.
- Automatic retries with programmable retry count.
- Redundant receive packets automatically dropped in auto response mode.
- 74 byte TX queue.
- 128 byte RX queue.
- Programmable TX Bit-time. Allows for changing operating frequency.
- Programmable preamble length.
- BIST TX and RX logic.
- Programmable TX and RX queue modes - buffer mode and FIFO mode.
- CRC32 generator for TX.
- CRC32 calculator and comparator for RX.

4.5.1 PD MAC TRANSMITTER

The PD MAC transmitter is comprised of three major blocks:

- **TX Queue:**
  The TX Queue is where software loads the message to be transmitted.
- **TX Control:**
  The TX Control implements the necessary control logic. It is responsible for reading the data from the TX queue and based on the data processing mode (automatic or raw), processing the data to make it suitable (nibbles with control information) for use by the TX Comm. It is also responsible for generating packet framing and terminating the packet in automatic mode, and generating messages for automatic response (GoodCRC and BIST Error Count). TX Control also handles the selection of the SOP type that is to be transmitted.
- **TX Comm:**
  The TX Comm is comprised of a TX CRC generator, a 4b5b encoder, serializer, preamble generator, and TX bit timer. It takes the nibble data, computes and inserts the CRC, 5b encodes, and generates the baseband serial data. Preamble insertion is also performed by this logic.

4.5.2 PD MAC RECEIVER

The PD MAC receiver is comprised of three major blocks:

- **RX Queue:**
  The RX Queue is where software reads the received messages.
- **RX Control:**
  The RX Control implements the necessary control logic. It is responsible for validating the received packet, updating the RX Queue status, and triggering automatic responses, if required.
- **RX Comm:**
  The RX Comm is comprised of the Clock and Data Recovery (CDR), RX DES (de-serializer) (serial-to-parallel converter, 4b5b decoder, and framing detector), RX CRC32 (CRC calculator, receive timer), and other logic to detect valid packet reception.

4.5.3 PD MAC BIST

The PD MAC incorporates BIST functions as defined in the USB PD Specification. It is comprised of a TX and RX block.

The BIST TX block contains a PRBS (Pseudo Random Binary Sequence) generator, BIST pattern generation logic, and its own bit-timing logic. The SOP type used by TX BIST Test Frames is a 20-bit static vector which is created by multiplexing between the five SOP ordered sets based on a register setting. The resultant 20-bit vector is simply bit selected when the packet is transmitted.

The BIST RX block contains a PRBS generator and bit error detection logic. BIST RX is used only during the BIST Receiver Test.

© 2024 Microchip Technology Inc. and its subsidiaries

5.0 OPERATIONAL CHARACTERISTICS

5.1 Absolute Maximum Ratings †

Supply Voltage (**VCONN_IN**) (Note 1) . . . . . -0.3V to +6.0V

Supply Voltage (**VDD33_ALW_IN**, **VDD33_IO_IN**) (Note 1) . . . . . 0V to +6.0V

Supply Voltage (**VDD33_REG_IN**, **VDD33_ANA_IN**) (Note 1) . . . . . 0V to +3.8V

Supply Voltage (**VPP18**) (Note 1) . . . . . 0V to +7.75V

Pin voltage with respect to ground (Note 2) . . . . . **VSS**-0.6V to **VDD33_REG_IN**+0.6V

Pin voltage with respect to ground (**VBUS_DET_IN**) . . . . . -0.5V to +3.96V

Pin voltage with respect to ground (**CC1**, **CC2**, **SPI_MOSI_SI**, **EN_VBUS**, **RESET_N_COM**, **VBUS_DIS**) . . . . . -0.5V to +6.0V

Storage Temperature . . . . . -55°C to +150°C

Lead Temperature Range . . . . . Refer to JEDEC Spec. J-STD-020

HBM ESD Performance . . . . . +/-2 kV

† **Notice**: Stresses exceeding those listed in this section could cause permanent damage to the device. This is a stress rating only. Exposure to absolute maximum rating conditions for extended periods may affect device reliability. Functional operation of the device at any condition exceeding those indicated in Section 5.2, "Operating Conditions ‡", Section 5.4, "DC Characteristics", or any other applicable section of this specification is not implied.

Note 1: When powering this device from laboratory or system power supplies, it is important that the absolute maximum ratings not be exceeded or device failure can result. Some power supplies exhibit voltage spikes on their outputs when AC power is switched on or off. In addition, voltage transients on the AC power line may appear on the DC output. If this possibility exists, it is suggested to use a clamp circuit.

2: This rating does not apply to the following pins: **VBUS_DET_IN**, **CC1**, **CC2**, **SPI_MOSI_SI**, **EN_VBUS**, **RESET_N_IN**, **VBUS_DIS.**

5.2 Operating Conditions ‡

Supply Voltage (**VCONN_IN**) . . . . . +4.75V to +5.25V

Supply Voltage (**VDD33_ALW_IN**, **VDD33_IO_IN**) . . . . . +2.97V to +3.63V

Supply Voltage (**VDD33_REG_IN**, **VDD33_ANA_IN**) . . . . . +2.97V to +3.63V

Supply Voltage (**VPP18**) . . . . . +1.62V to +1.98V

Pin voltage with respect to ground (Note 1) . . . . . 0V to +2.00V

Positive pin voltage with respect to ground (**VBUS_DET_IN**) . . . . . **VDD33_IO_IN**-0.3V to **VDD33_IO_IN**+0.3V

Negative pin voltage with respect to ground (**VBUS_DET_IN**) . . . . . -0.33V to -0.27V

Positive pin voltage with respect to ground (**CC1**, **CC2**, **SPI_MOSI_SI**, **EN_VBUS**, **RESET_N_COM**, **VBUS_DIS**) . . . . . +2.97V to +3.63V

Negative pin voltage with respect to ground (**CC1**, **CC2**, **SPI_MOSI_SI**, **EN_VBUS**, **RESET_N_COM**, **VBUS_DIS**) . . . . . -0.33V to -0.27V

Power Supply Rise Time Max (T_{RT}) (**VDD33_IO_IN**) (Figure 5-1) . . . . . 100 ms

Power Supply Rise Rate Max (**VDD33_ANA_IN**, **VDD33_REG_IN**) . . . . . 0.1 V/µs

Ambient Operating Temperature in Still Air (T_A) . . . . . -40°C to +85°C

‡ **Notice**: Proper operation of the device is assured only within the ranges specified in this section.

Note 1: This rating does not apply to the following pins: **VBUS_DET_IN**, **CC1**, **CC2**, **SPI_MOSI_SI**, **EN_VBUS**, **RESET_N_COM**, **VBUS_DIS.**

© 2024 Microchip Technology Inc. and its subsidiaries

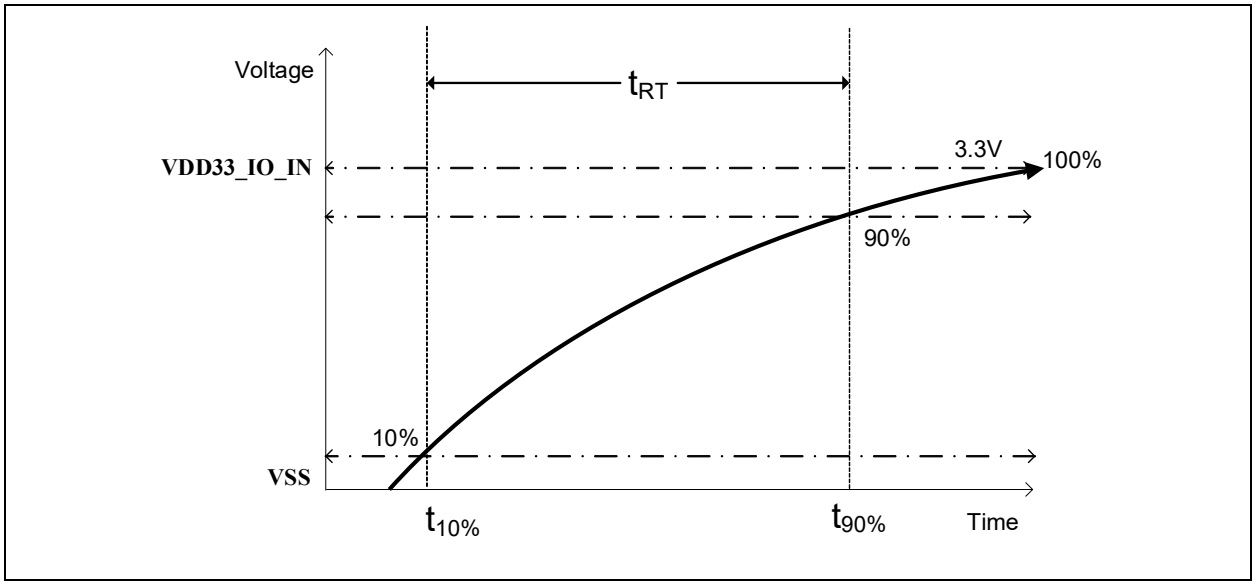

FIGURE 5-1: *Supply Rise Time Model.*

PACKAGE THERMAL SPECIFICATIONS

Parameter	Symbol	°C/W
Thermal Resistance Junction to Ambient (@ 0 air flow)	Θ_{JA}	36.6
Thermal Resistance Junction to Top of Case	Θ_{JC}	9.2
Thermal Resistance Junction to Board	Θ_{JB}	15.7
Thermal Resistance Junction to Bottom of Case (@ 0 air flow)	Ψ_{JT}	0.2

Note 1: Thermal parameters are measured or estimated for devices in a multi-layer 2S2P PCB per JESDN51.

TABLE 5-1: POWER DISSIPATION

Parameter	Symbol	Max	Units
Power Dissipation	P_{dis}	214	mW

Note:	This is the worst-case power dissipation as a consequence of maximum loading (before current-limiting protections take effect) upon the VCONN power switch, 3.3V power-ORing switch, analog blocks, and core digital logic.

© 2024 Microchip Technology Inc. and its subsidiaries

5.3 Current Consumption

TABLE 5-2: TYPICAL DEVICE CURRENT CONSUMPTION

Power State	3.3V Supply Current		
	Typical	Max	Units
RESET	1.27	—	mA
STANDBY (source)	7.49	—	mA
ATTACHED IDLE (source)	11.40	—	mA
ACTIVE (with PD packet transmitting)	-	23.84	mA

Note 1: This table details the power consumption of the MCP22301 device as measured during various modes of operation for a single port Source-Only implementation (i.e.: loading a PDS Source-only configuration and programming with default settings). The power consumption may vary significantly depending on the utilization SAMD20 MCU to handle any additional custom system-specific functions. Refer to the respective SAMD20E and MCP22350 data sheets for more details on the power consumption of these two devices under certain specific usage scenarios. Also refer to Section 4.2, "Power States" for additional information. Power dissipation is determined by temperature, supply voltage, and external source/sink requirements. Maximum values represent very short bursts of activity over a small amount of time. Typical values represent averaged current consumption over time.

2: **STANDBY** is equivalent to USB Type-C™ specification's Unattached.SRC.

3: Currents measured with all 3.3V rails tied together.

© 2024 Microchip Technology Inc. and its subsidiaries

5.4 DC Characteristics

TABLE 5-3: ELECTRICAL CHARACTERISTICS

Parameter	Symbol	Min.	Typ.	Max.	Units	Conditions
I Type Input Buffer						
Low Input Level	V_{IL}	—	—	0.3*VDD33_REG_IN	V	
High Input Level	V_{IH}	0.55*VDD33_REG_IN	—	—	V	
Input Leakage	I_{LEAK}	-1	±0.015	1	µA	
IS_1 Type Input Buffer						
Low Input Level	V_{IL}	—	—	0.3*VDD33_REG_IN	V	
High Input Level	V_{IH}	0.55*VDD33_REG_IN	—	—	V	
Input Leakage	I_{IH}	-1	±0.015	1	µA	
IS_2 Type Input Buffer						
Low Input Level	V_{ILI}	-0.3	—	0.8	V	
High Input Level	V_{IHI}	2.0	—	3.6	V	
Negative-Going Threshold	V_{ILT}	1.21	1.33	1.8	V	Schmitt trigger
Positive-Going Threshold	V_{IHT}	1.31	1.58	1.8	V	Schmitt trigger
Schmitt Trigger Hysteresis (V_{IHT} - V_{ILT})	V_{HYS}	100	133	200	mV	
Input Leakage (V_{IN} = VSS or VDD33_IO_IN)	I_{IH}	-10	—	10	µA	Note 1
Input Capacitance		—	—	3	pF	
O2 Type Output Buffer						
Low Output Level	V_{OL}	—	0.1*VDD33_REG_IN	0.2*VDD33_REG_IN	V	I_{OL} = -2 mA
High Output Level	V_{OH}	0.8*VDD33_REG_IN	0.9*VDD33_REG_IN	—	V	I_{OH} = 2 mA
OD2 Type Output Buffer						
Low Output Level	V_{OL}	—	0.1*VDD33_REG_IN	0.2*VDD33_REG_IN	V	I_{OL} = -2 mA
O8_1 Type Output Buffer						
Low Output Level	V_{OL}	—	0.1*VDD33_REG_IN	0.2*VDD33_REG_IN	V	I_{OL} = -8 mA
High Output Level	V_{OH}	0.8*VDD33_REG_IN	0.9*VDD33_REG_IN	—	V	I_{OH} = 8 mA
O8_2 Type Output Buffer						
Low Output Level	V_{OL}	—	—	0.4	V	I_{OL} = -8 mA
High Output Level	V_{OH}	VDD33_IO_IN - 0.4	—	—	V	I_{OH} = 8 mA

Note 1: This specification applies to all inputs and tri-stated bi-directional pins. Internal pull-down and pull-up resistors add +/- 50 µA per-pin (typical).

TABLE 5-4: VOLTAGE REGULATOR OPERATING RANGES

Pin Name	Parameter	Min	Typ	Max	Units
VDD18_CORE_OUT	DC uncalibrated output voltage	1.62	1.80	1.91	V
VDD12_CORE_OUT	DC calibrated output voltage	1.10	1.23	1.30	V

TABLE 5-5: VCONN SOURCE DC PARAMETERS

Parameter	Symbol	Min	Typ	Max	Units	Notes
ILIM	I_{LIM_VCONN}		600		mA	VCONN_IN = 5V
On Resistance	R_{ON_VCONN}		270		mΩ	

© 2024 Microchip Technology Inc. and its subsidiaries

5.5 AC Characteristics and Timing

This section details the various AC timing specifications of the device.

5.5.1 RESET_N TIMING

Figure 5-2 illustrates the **RESET_N** timing requirements. Assertion of **RESET_N** is not a requirement. However, if used, it must be asserted for the minimum period specified.

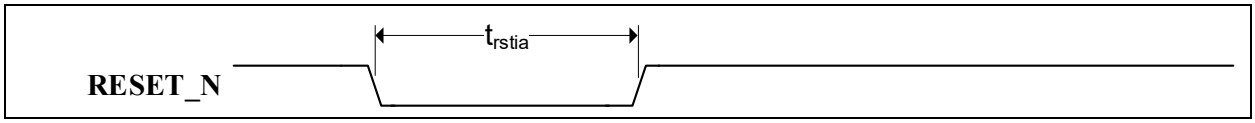

FIGURE 5-2: *RESET_N Timing.*

TABLE 5-6: RESET_N TIMING VALUES

Symbol	Description	Min	Typ	Max	Units
t_{rstia}	**RESET_N** input assertion time	1	—	—	µs

5.5.2 SPI TIMING

Figure 5-3 and Figure 5-4 illustrate the SPI host and client timing requirements, respectively. Refer to Section 4.1, "Serial Peripheral Interface (SPI)" for additional information.

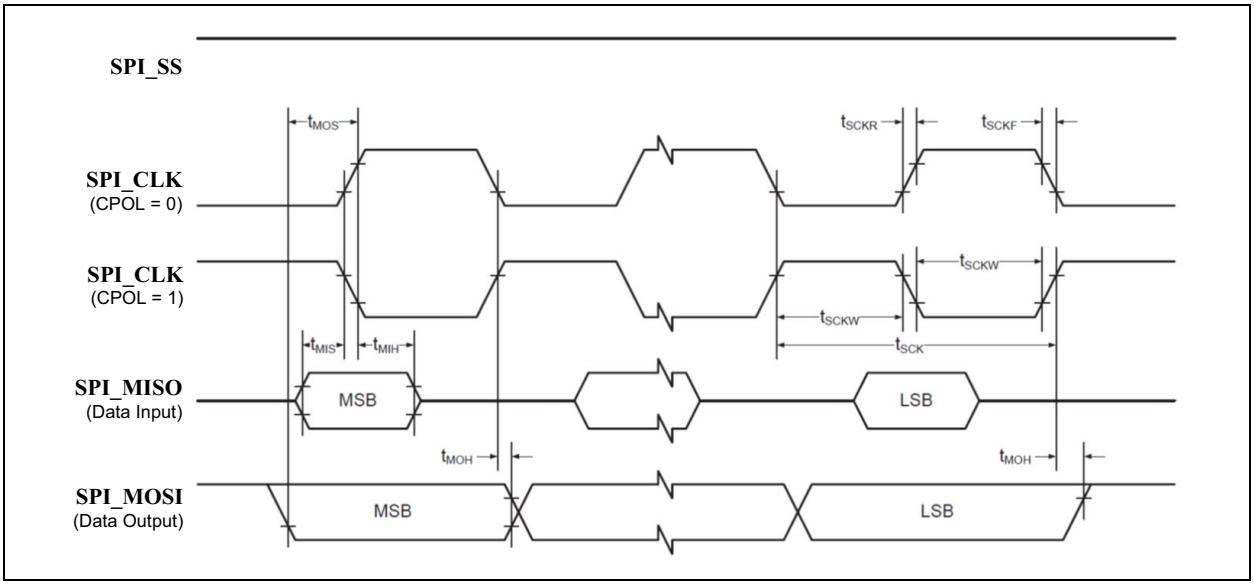

FIGURE 5-3: *SPI Host Timing.*

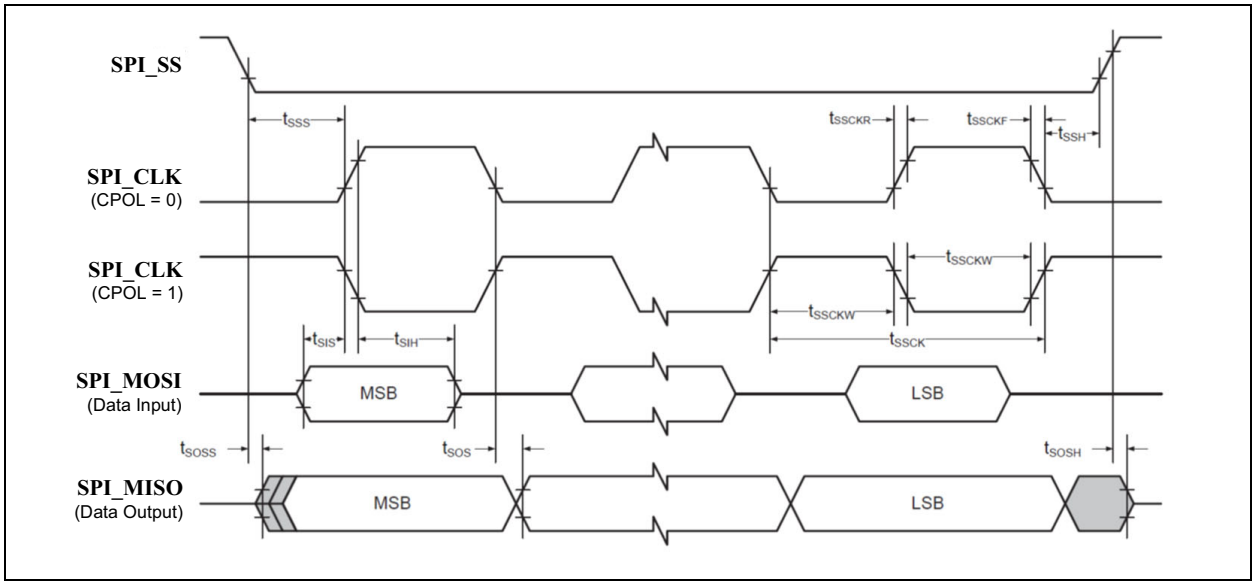

FIGURE 5-4: *SPI Client Timing.*

TABLE 5-7: SPI TIMING VALUES

Symbol	Description	Min	Typ	Max	Units
t_{SCK}	**SPI_CLK** period (Host)	—	84	—	
t_{SCKW}	**SPI_CLK** high/low width (Host)	—	0.5*t_{SCK}	—	
t_{SCKR}	**SPI_CLK** rise time (Host)	—	7	—	ns
t_{SCKF}	**SPI_CLK** fall time (Host)	—	9.5	—	ns
t_{MIS}	**SPI_MISO** setup to **SPI_CLK** (Host)	—	29	—	ns
t_{MIH}	**SPI_MISO** hold after **SPI_CLK** (Host)	—	8	—	ns
t_{MOS}	**SPI_MOSI** setup to **SPI_CLK** (Host)	—	t_{SCK}/2 - 16	—	ns
t_{MOH}	**SPI_MOSI** hold after **SPI_CLK** (Host)	—	16	—	ns
t_{SSCK}	**SPI_CLK** period (Client)	1*t_{CLK_APB}	—	—	ns
t_{SSCKW}	**SPI_CLK** high/low width (Client)	0.5*t_{SSCK}	—	—	ns
t_{SSCKR}	**SPI_CLK** rise time (Client)	—	7	—	ns
t_{SSCKF}	**SPI_CLK** fall time (Client)	—	9.5	—	ns
t_{SIS}	**SPI_MOSI** setup to **SPI_CLK** (Client)	t_{SSCK}/2-19	—	—	ns
t_{SIH}	**SPI_MOSI** hold after **SPI_CLK** (Client)	t_{SSCK}/2-5	—	—	ns
t_{SSS}	**SPI_SS** setup to **SPI_CLK** (Client, PRELOADEN=1)	2*t_{CLK_APB} + t_{SOS}	—	—	ns
	SPI_SS setup to **SPI_CLK** (Client, PRELOADEN=0)	t_{SOS}+7	—	—	ns
t_{SSH}	**SPI_SS** hold after **SPI_CLK** (Client)	t_{SIH}-4	—	—	ns
t_{SOS}	**SPI_MISO** setup to **SPI_CLK** (Client)	—	t_{SSCK}/2-20	—	ns
t_{SOH}	**SPI_MISO** hold after **SPI_CLK** (Client)	—	20	—	ns
t_{SOSS}	**SPI_MISO** setup after **SPI_SS** low (Client)	—	16	—	ns
t_{SOSH}	**SPI_MISO** setup after **SPI_SS** high (Client)	—	11	—	ns

© 2024 Microchip Technology Inc. and its subsidiaries

6.0 PACKAGE INFORMATION

6.1 Package Marking Information

40-Lead VQFN (6 x 6 mm)



Examples

MCP22301-1



MCP22301-2



Legend:	XX...X	Product code or customer-specific information
	Y	Year code (last digit of calendar year)
	YY	Year code (last 2 digits of calendar year)
	WW	Week code (week of January 1 is week ‘01’)
	NNN	Alphanumeric traceability code
	(e3)	Pb-free JEDEC® designator for Matte Tin (Sn)
	*	This package is Pb-free. The Pb-free JEDEC designator ((e3)) can be found on the outer packaging for this package.
	●, ▲, ▼	Pin one index is identified by a dot, delta up, or delta down (triangle mark).
Note:	In the event the full Microchip part number cannot be marked on one line, it will be carried over to the next line, thus limiting the number of available characters for customer-specific information. Package may or may not include the corporate logo. Underbar (_) and/or Overbar (¯) symbol may not be to scale.	

© 2024 Microchip Technology Inc. and its subsidiaries

40-Lead Very Thin Plastic Quad Flat, No Lead Package (KYX) - 6x6 mm Body [VQFN] With 4.6x4.6 mm Exposed Pad

Note: For the most current package drawings, please see the Microchip Packaging Specification located at http://www.microchip.com/packaging

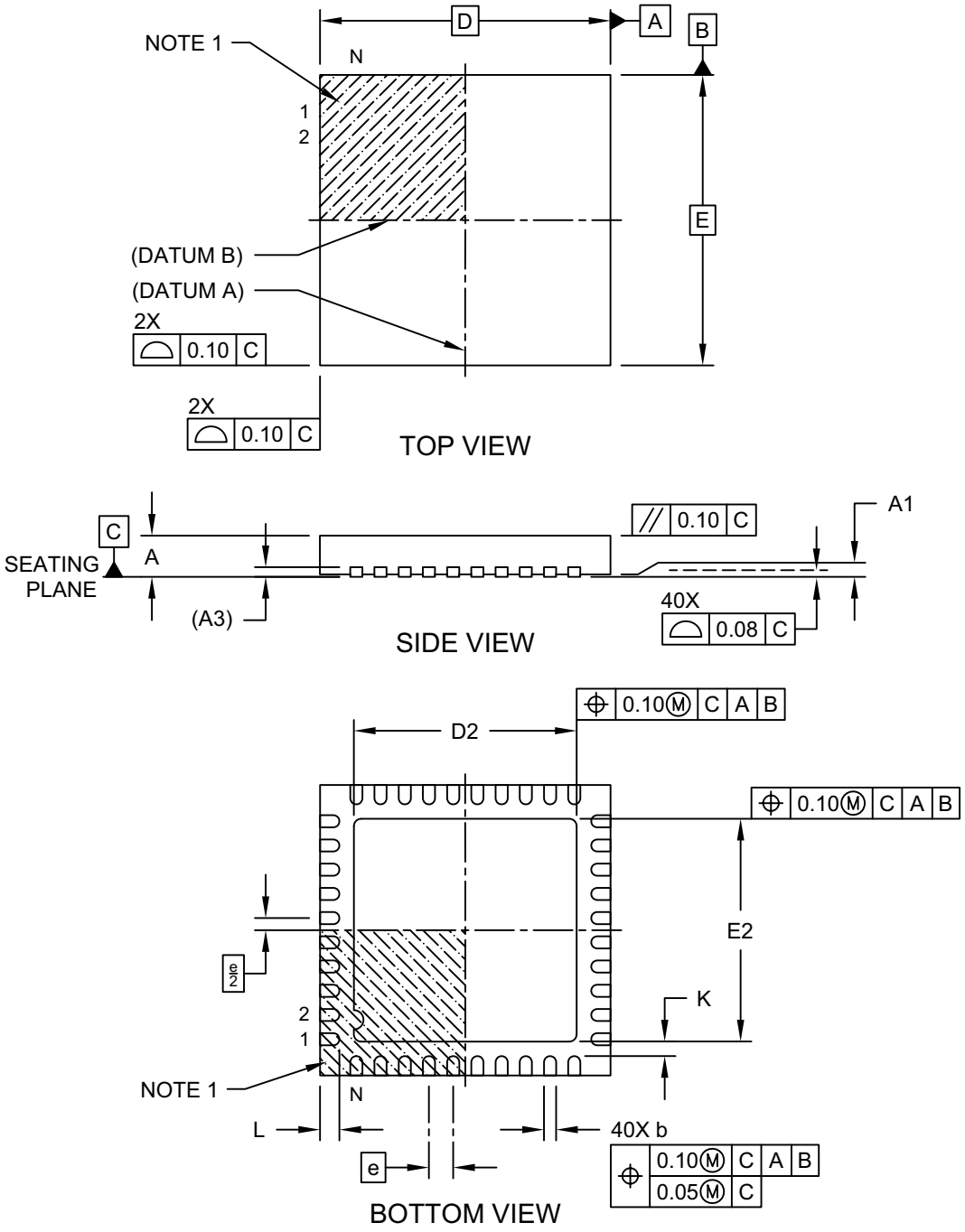

Microchip Technology Drawing C04-473 Rev. A Sheet 1 of 2

© 2024 Microchip Technology Inc. and its subsidiaries

40-Lead Very Thin Plastic Quad Flat, No Lead Package (KYX) - 6x6 mm Body [VQFN] With 4.6x4.6 mm Exposed Pad

Note: For the most current package drawings, please see the Microchip Packaging Specification located at http://www.microchip.com/packaging

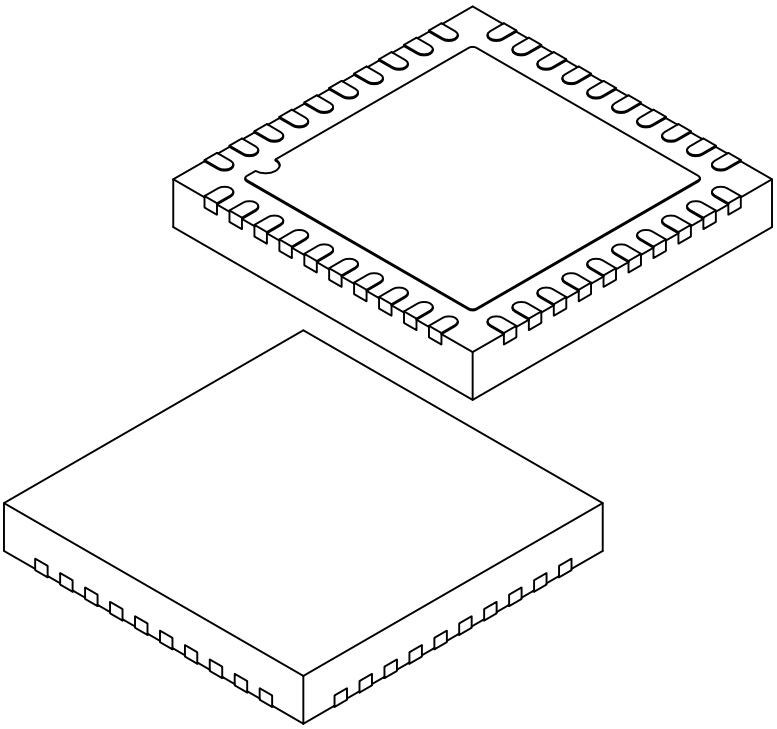

Units		MILLIMETERS		
Dimension Limits		MIN	NOM	MAX
Number of Terminals	N		40	
Pitch	e		0.50 BSC	
Overall Height	A	0.80	0.85	0.90
Standoff	A1	0.00	0.02	0.07
Terminal Thickness	A3		0.20 REF	
Overall Length	D		6.00 BSC	
Exposed Pad Length	D2	4.50	4.60	4.70
Overall Width	E		6.00 BSC	
Exposed Pad Width	E2	4.50	4.60	4.70
Terminal Width	b	0.20	0.25	0.30
Terminal Length	L	0.35	0.40	0.45
Terminal-to-Exposed-Pad	K	0.20	-	-

Notes:

1. Pin 1 visual index feature may vary, but must be located within the hatched area.
2. Package is saw singulated
3. Dimensioning and tolerancing per ASME Y14.5M
   BSC: Basic Dimension. Theoretically exact value shown without tolerances.
   REF: Reference Dimension, usually without tolerance, for information purposes only.

Microchip Technology Drawing C04-473 Rev. A Sheet 2 of 2

© 2024 Microchip Technology Inc. and its subsidiaries

40-Lead Very Thin Plastic Quad Flat, No Lead Package (KYX) - 6x6 mm Body [VQFN] With 4.6x4.6 mm Exposed Pad

Note: For the most current package drawings, please see the Microchip Packaging Specification located at http://www.microchip.com/packaging

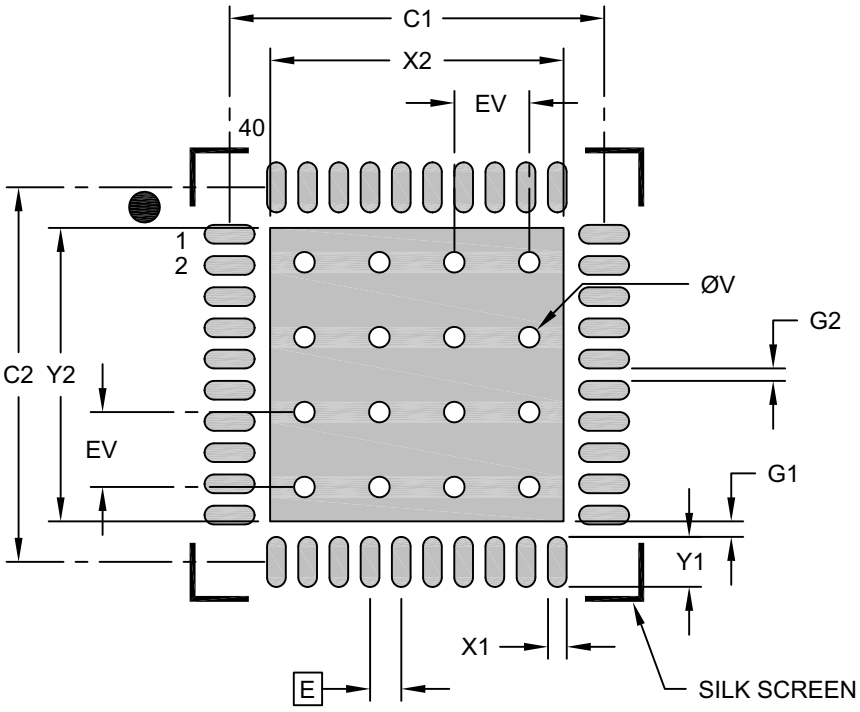

RECOMMENDED LAND PATTERN

Units		MILLIMETERS		
Dimension Limits		MIN	NOM	MAX
Contact Pitch	E	0.50 BSC		
Optional Center Pad Width	X2			4.70
Optional Center Pad Length	Y2			4.70
Contact Pad Spacing	C1		6.00	
Contact Pad Spacing	C2		6.00	
Contact Pad Width (X40)	X1			0.30
Contact Pad Length (X40)	Y1			0.80
Contact Pad to Center Pad (X40)	G1	0.20		
Contact Pad to Contact Pad (X36)	G2	0.20		
Thermal Via Diameter	V		0.33	
Thermal Via Pitch	EV		1.20	

Notes:

1. Dimensioning and tolerancing per ASME Y14.5M

   BSC: Basic Dimension. Theoretically exact value shown without tolerances.

2. For best soldering results, thermal vias, if used, should be filled or tented to avoid solder loss during reflow process

Microchip Technology Drawing C04-2473 Rev. A

© 2024 Microchip Technology Inc. and its subsidiaries

APPENDIX A: REVISION HISTORY

Revision A (May 2024)

- Initial release of this document.

NOTES:

© 2024 Microchip Technology Inc. and its subsidiaries

PRODUCT IDENTIFICATION SYSTEM

To order or obtain information, e.g., on pricing or delivery, refer to the factory or the listed sales office.

PART NO.	[X](1)	-X	[X]	/XX
Device	Tape & Reel Option	Version	Temperature Range	Package

Device:	MCP22301: Stand-alone USB Type-C™ Power Delivery 3.1 Controller	
Tape and Reel Option:	Blank T	= Standard packaging (Tube/Tray) = Tape and Reel (Note 1)
Version:	1 2	= No Dead Battery Support = With Dead Battery Support
Temperature Range:	I	= -40°C to +85°C (Industrial)
Package:	KYX	= 40-pin 6 mm x 6 mm VQFN

Examples:

a) MCP22301-1I/KYX
No Dead Battery Support, Standard Packaging, -40°C to +85°C, 40-pin VQFN Package

b) MCP22301-2I/KYX
With Dead Battery Support, Standard Packaging, -40°C to +85°C, 40-pin VQFN Package

c) MCP22301T-1I/KYX
No Dead Battery Support, Tape and Reel, -40°C to +85°C, 40-pin VQFN Package

d) MCP22301T-2I/KYX
With Dead Battery Support, Tape and Reel, -40°C to +85°C, 40-pin VQFN Package

Note 1: Tape and Reel identifier only appears in the catalog part number description. This identifier is used for ordering purposes and is not printed on the device package. Check with your Microchip Sales Office for package availability with the Tape and Reel option.

© 2024 Microchip Technology Inc. and its subsidiaries

NOTES:

© 2024 Microchip Technology Inc. and its subsidiaries

Note the following details of the code protection feature on Microchip products:

- Microchip products meet the specifications contained in their particular Microchip Data Sheet.
- Microchip believes that its family of products is secure when used in the intended manner, within operating specifications, and under normal conditions.
- Microchip values and aggressively protects its intellectual property rights. Attempts to breach the code protection features of Microchip product is strictly prohibited and may violate the Digital Millennium Copyright Act.
- Neither Microchip nor any other semiconductor manufacturer can guarantee the security of its code. Code protection does not mean that we are guaranteeing the product is "unbreakable" Code protection is constantly evolving. Microchip is committed to continuously improving the code protection features of our products.

This publication and the information herein may be used only with Microchip products, including to design, test, and integrate Microchip products with your application. Use of this information in any other manner violates these terms. Information regarding device applications is provided only for your convenience and may be superseded by updates. It is your responsibility to ensure that your application meets with your specifications. Contact your local Microchip sales office for additional support or, obtain additional support at https://www.microchip.com/en-us/support/design-help/client-support-services.

THIS INFORMATION IS PROVIDED BY MICROCHIP "AS IS". MICROCHIP MAKES NO REPRESENTATIONS OR WARRANTIES OF ANY KIND WHETHER EXPRESS OR IMPLIED, WRITTEN OR ORAL, STATUTORY OR OTHERWISE, RELATED TO THE INFORMATION INCLUDING BUT NOT LIMITED TO ANY IMPLIED WARRANTIES OF NON-INFRINGEMENT, MERCHANTABILITY, AND FITNESS FOR A PARTICULAR PURPOSE, OR WARRANTIES RELATED TO ITS CONDITION, QUALITY, OR PERFORMANCE.

IN NO EVENT WILL MICROCHIP BE LIABLE FOR ANY INDIRECT, SPECIAL, PUNITIVE, INCIDENTAL, OR CONSEQUENTIAL LOSS, DAMAGE, COST, OR EXPENSE OF ANY KIND WHATSOEVER RELATED TO THE INFORMATION OR ITS USE, HOWEVER CAUSED, EVEN IF MICROCHIP HAS BEEN ADVISED OF THE POSSIBILITY OR THE DAMAGES ARE FORESEEABLE. TO THE FULLEST EXTENT ALLOWED BY LAW, MICROCHIP'S TOTAL LIABILITY ON ALL CLAIMS IN ANY WAY RELATED TO THE INFORMATION OR ITS USE WILL NOT EXCEED THE AMOUNT OF FEES, IF ANY, THAT YOU HAVE PAID DIRECTLY TO MICROCHIP FOR THE INFORMATION.

Use of Microchip devices in life support and/or safety applications is entirely at the buyer's risk, and the buyer agrees to defend, indemnify and hold harmless Microchip from any and all damages, claims, suits, or expenses resulting from such use. No licenses are conveyed, implicitly or otherwise, under any Microchip intellectual property rights unless otherwise stated.

For information regarding Microchip's Quality Management Systems, please visit www.microchip.com/quality.

Trademarks

The Microchip name and logo, the Microchip logo, Adaptec, AVR, AVR logo, AVR Freaks, BesTime, BitCloud, CryptoMemory, CryptoRF, dsPIC, flexPWR, HELDO, IGLOO, JukeBlox, KeeLoq, Kleer, LANCheck, LinkMD, maXStylus, maXTouch, MediaLB, megaAVR, Microsemi, Microsemi logo, MOST, MOST logo, MPLAB, OptoLyzer, PIC, picoPower, PICSTART, PIC32 logo, PolarFire, Prochip Designer, QTouch, SAM-BA, SenGenuity, SpyNIC, SST, SST Logo, SuperFlash, Symmetricom, SyncServer, Tachyon, TimeSource, tinyAVR, UNI/O, Vectron, and XMEGA are registered trademarks of Microchip Technology Incorporated in the U.S.A. and other countries.

AgileSwitch, ClockWorks, The Embedded Control Solutions Company, EtherSynch, Flashtec, Hyper Speed Control, HyperLight Load, Libero, motorBench, mTouch, Powermite 3, Precision Edge, ProASIC, ProASIC Plus, ProASIC Plus logo, Quiet-Wire, SmartFusion, SyncWorld, TimeCesium, TimeHub, TimePictra, TimeProvider, and ZL are registered trademarks of Microchip Technology Incorporated in the U.S.A.

Adjacent Key Suppression, AKS, Analog-for-the-Digital Age, Any Capacitor, AnyIn, AnyOut, Augmented Switching, BlueSky, BodyCom, Clockstudio, CodeGuard, CryptoAuthentication, CryptoAutomotive, CryptoCompanion, CryptoController, dsPICDEM, dsPICDEM.net, Dynamic Average Matching, DAM, ECAN, Espresso T1S, EtherGREEN, EyeOpen, GridTime, IdealBridge, IGaT, In-Circuit Serial Programming, ICSP, INICnet, Intelligent Paralleling, IntelliMOS, Inter-Chip Connectivity, JitterBlocker, Knob-on-Display, MarginLink, maxCrypto, maxView, memBrain, Mindi, MiWi, MPASM, MPF, MPLAB Certified logo, MPLIB, MPLINK, mSiC, MultiTRAK, NetDetach, Omniscient Code Generation, PICDEM, PICDEM.net, PICkit, PICtail, Power MOS IV, Power MOS 7, PowerSmart, PureSilicon, QMatrix, REAL ICE, Ripple Blocker, RTAX, RTG4, SAM-ICE, Serial Quad I/O, simpleMAP, SimpliPHY, SmartBuffer, SmartHLS, SMART-I.S., storClad, SQI, SuperSwitcher, SuperSwitcher II, Switchtec, SynchroPHY, Total Endurance, Trusted Time, TSHARC, Turing, USBCheck, VariSense, VectorBlox, VeriPHY, ViewSpan, WiperLock, XpressConnect, and ZENA are trademarks of Microchip Technology Incorporated in the U.S.A. and other countries.

SQTP is a service mark of Microchip Technology Incorporated in the U.S.A.

The Adaptec logo, Frequency on Demand, Silicon Storage Technology, and Symmcom are registered trademarks of Microchip Technology Inc. in other countries.

GestIC is a registered trademark of Microchip Technology Germany II GmbH & Co. KG, a subsidiary of Microchip Technology Inc., in other countries.

All other trademarks mentioned herein are property of their respective companies.
© 2024, Microchip Technology Incorporated and its subsidiaries.

All Rights Reserved.

ISBN:

Worldwide Sales and Service

AMERICAS

Corporate Office
2355 West Chandler Blvd.
Chandler, AZ 85224-6199
Tel: 480-792-7200
Fax: 480-792-7277
Technical Support:
http://www.microchip.com/support
Web Address:
www.microchip.com

Atlanta
Duluth, GA
Tel: 678-957-9614
Fax: 678-957-1455

Austin, TX
Tel: 512-257-3370

Boston
Westborough, MA
Tel: 774-760-0087
Fax: 774-760-0088

Chicago
Itasca, IL
Tel: 630-285-0071
Fax: 630-285-0075

Dallas
Addison, TX
Tel: 972-818-7423
Fax: 972-818-2924

Detroit
Novi, MI
Tel: 248-848-4000

Houston, TX
Tel: 281-894-5983

Indianapolis
Noblesville, IN
Tel: 317-773-8323
Fax: 317-773-5453
Tel: 317-536-2380

Los Angeles
Mission Viejo, CA
Tel: 949-462-9523
Fax: 949-462-9608
Tel: 951-273-7800

Raleigh, NC
Tel: 919-844-7510

New York, NY
Tel: 631-435-6000

San Jose, CA
Tel: 408-735-9110
Tel: 408-436-4270

Canada - Toronto
Tel: 905-695-1980
Fax: 905-695-2078

ASIA/PACIFIC

Australia - Sydney
Tel: 61-2-9868-6733

China - Beijing
Tel: 86-10-8569-7000

China - Chengdu
Tel: 86-28-8665-5511

China - Chongqing
Tel: 86-23-8980-9588

China - Dongguan
Tel: 86-769-8702-9880

China - Guangzhou
Tel: 86-20-8755-8029

China - Hangzhou
Tel: 86-571-8792-8115

China - Hong Kong SAR
Tel: 852-2943-5100

China - Nanjing
Tel: 86-25-8473-2460

China - Qingdao
Tel: 86-532-8502-7355

China - Shanghai
Tel: 86-21-3326-8000

China - Shenyang
Tel: 86-24-2334-2829

China - Shenzhen
Tel: 86-755-8864-2200

China - Suzhou
Tel: 86-186-6233-1526

China - Wuhan
Tel: 86-27-5980-5300

China - Xian
Tel: 86-29-8833-7252

China - Xiamen
Tel: 86-592-2388138

China - Zhuhai
Tel: 86-756-3210040

ASIA/PACIFIC

India - Bangalore
Tel: 91-80-3090-4444

India - New Delhi
Tel: 91-11-4160-8631

India - Pune
Tel: 91-20-4121-0141

Japan - Osaka
Tel: 81-6-6152-7160

Japan - Tokyo
Tel: 81-3-6880- 3770

Korea - Daegu
Tel: 82-53-744-4301

Korea - Seoul
Tel: 82-2-554-7200

Malaysia - Kuala Lumpur
Tel: 60-3-7651-7906

Malaysia - Penang
Tel: 60-4-227-8870

Philippines - Manila
Tel: 63-2-634-9065

Singapore
Tel: 65-6334-8870

Taiwan - Hsin Chu
Tel: 886-3-577-8366

Taiwan - Kaohsiung
Tel: 886-7-213-7830

Taiwan - Taipei
Tel: 886-2-2508-8600

Thailand - Bangkok
Tel: 66-2-694-1351

Vietnam - Ho Chi Minh
Tel: 84-28-5448-2100

EUROPE

Austria - Wels
Tel: 43-7242-2244-39
Fax: 43-7242-2244-393

Denmark - Copenhagen
Tel: 45-4485-5910
Fax: 45-4485-2829

Finland - Espoo
Tel: 358-9-4520-820

France - Paris
Tel: 33-1-69-53-63-20
Fax: 33-1-69-30-90-79

Germany - Garching
Tel: 49-8931-9700

Germany - Haan
Tel: 49-2129-3766400

Germany - Heilbronn
Tel: 49-7131-72400

Germany - Karlsruhe
Tel: 49-721-625370

Germany - Munich
Tel: 49-89-627-144-0
Fax: 49-89-627-144-44

Germany - Rosenheim
Tel: 49-8031-354-560

Israel - Ra'anana
Tel: 972-9-744-7705

Italy - Milan
Tel: 39-0331-742611
Fax: 39-0331-466781

Italy - Padova
Tel: 39-049-7625286

Netherlands - Drunen
Tel: 31-416-690399
Fax: 31-416-690340

Norway - Trondheim
Tel: 47-7288-4388

Poland - Warsaw
Tel: 48-22-3325737

Romania - Bucharest
Tel: 40-21-407-87-50

Spain - Madrid
Tel: 34-91-708-08-90
Fax: 34-91-708-08-91

Sweden - Gothenberg
Tel: 46-31-704-60-40

Sweden - Stockholm
Tel: 46-8-5090-4654

UK - Wokingham
Tel: 44-118-921-5800
Fax: 44-118-921-5820

© 2024 Microchip Technology Inc. and its subsidiaries