MCP22350

Highly Integrated Small Form Factor USB Type-C® Power Delivery 3.1 Port Controller

Highlights

- Companion PD Controller for Microchip MCU or SoC
- Small Form Factor QFN Package
- Integrated Analog Discrete Components Reduce Bill of Materials and Design Footprint
- USB Power Delivery 3.1 Compliant MAC
- USB Type-C®(1) Connector Support with Connection Detection and Control
- SPI Interface for CPU/SoC Communication
- USB Type-C Alternate Mode Support
- Dual Role Port (DRP) and Fast Role Swap (FRS) Support with DRP Offload Mode

Target Applications

- Notebook Computers
- All-in-One/Desktop PCs
- Smartphones
- Tablets
- Monitors
- Docking Stations
- HDTVs
- Printers
- Multi-Port Chargers

Key Benefits

- Integrated Analog Discrete Components
  - VCONN FETs with Rp/Rd switching
  - Dead battery Rd termination
  - Programmable current sense for overcurrent conditions
  - Voltage sense for overvoltage conditions
- Integrated 3.3V Power Switch
  - Provides dead battery support (MCP22350-2 only)
  - Automatically switch between VBUS and main +3.3V
- USB Power Delivery MAC
  - Compliant with USB Power Delivery specification revision 3.1
  - Power Delivery packet framing
  - CRC Checking/generation
  - 4B/5B encoding/decoding
  - BMC encoding/decoding
  - EOP/SOP generation for PD frames
  - SOP detection and SOP header processing
  - Separate RX/TX FIFOs
  - Automatic GoodCRC message generation
  - Automatic retry generation
  - Error handling
  - Low standby power support
- USB Type-C Cable Detect Logic
  - Auto cable attach and orientation detection
  - Routes baseband communication to respective CC pin per detected orientation
  - VCONN supply control for active cable
  - Configurable Downstream Facing Port (DFP) and Upstream Facing Port (UFP) modes
  - Charging current capability detection
  - Detection of Debug Accessory mode, Audio Adapter Accessory mode
- SPI Interface Supports Communication/ Configuration via Microchip MCU or SoC
- Alternate Mode Support
  - DisplayPort™ and other major protocols
- **CFG_SEL** Pin for Selection of Device Mode
- Power and I/Os
  - Integrated 1.8V voltage regulator
  - 8 Configurable general purpose I/O pins
- Package
  - 28-QFN (4.0mm x 4.0mm)
- Environmental
  - Industrial temperature range (-40°C to +85°C)

1. USB Type-C® and USB-C® are trademarks of USB Implementers Forum.

© 2024 Microchip Technology Inc. and its subsidiaries

1.0 PREFACE

1.1 Glossary of Terms

TABLE 1-1: GLOSSARY OF TERMS

Term	Definition
ADC	Analog to Digital Converter
AFE	Analog Front End
BCI	Baseband CC Interface
Billboard	USB Billboard Device. A required USB device class for UFPs which support Alternate modes in order to provide product information to the USB host.
BIST	Built-In Self Test
BMC	Bi-phase Mark Coding
Byte	8-bits
CC	Generic reference to USB Type-C Cable / Connector CC1/CC2 pins
CSR	Control and Status Register
DB	Dead Battery
DFP	Downstream Facing Port (USB Type-C Specification definition)
DP	DisplayPort (a VESA standard interface)
DPM	Device Policy Manager (PD Specification definition)
DRP	Dual Role Power (USB Type-C Specification definition)
DWORD	32-bits
EC	Embedded Controller
EP	USB Endpoint
FIFO	First In First Out buffer
FW	Firmware
FS	Full-Speed
Host	External system (Includes processor, application software, etc.)
HPD	Hot-Plug Detect functionality as defined by DisplayPort and DisplayPort Alternate Mode specifications
HS	High-Speed
HW	Hardware (Refers to function implemented by the device)
IC	Integrated Circuit
IFC	InterFrame Gap
LDO	Linear Drop-Out regulator
MAC	Media Access Controller
Microchip	Microchip Technology Incorporated
N/A	Not Applicable
OCS	Over-Current Sense
PCS	Physical Coding Sublayer
PD / UPD	USB Power Delivery
PIO	General Purpose I/O
PMIC	Power Management Integrated Circuit
POR	Power-On Reset
PRBS	Pseudo Random Binary Sequence
QWORD	64-bits
SA	Source Address

© 2024 Microchip Technology Inc. and its subsidiaries

TABLE 1-1: GLOSSARY OF TERMS (CONTINUED)

Term	Definition
SBU	SideBand Use
SCSR	System Control and Status Register
SPM	System Policy Manager (PD Specification definition)
SS	SuperSpeed
SVDM	Standard/Vendor Defined Message (PD Specification definition)
SVID	Standard/Vendor IDentity (PD Specification definition)
TCPC	USB Type-C Port Controller
UFP	Upstream Facing Port (USB Type-C Specification definition)
USB	Universal Serial Bus
USB Type-C	USB Type-C Cable / Connector
VDO	Vendor-defined Object (PD Specification definition)
VSM	Vendor Specific Messaging
WORD	16-bits
ZLP	Zero Length USB Packet

1.2 Buffer Types

TABLE 1-2: BUFFER TYPES

Buffer Type	Description
IS	Schmitt-Triggered input
O8	Output with 8 mA sink and 8 mA source
OD8	Open-drain output with 8 mA sink
PU	70k (typical) internal pull-up. Unless otherwise noted in the pin description, internal pull-ups are always enabled. **Note:** Internal pull-up resistors prevent unconnected inputs from floating. Do not rely on internal resistors to drive signals external to the device. When connected to a load that must be pulled high, an external resistor must be added.
AIO	Analog bidirectional
P	Power pin

Note: Digital signals are not 5V tolerant unless specified.

Note: Refer to Section 14.5, "DC Characteristics," on page 178 for the electrical characteristics of the various buffers.

© 2024 Microchip Technology Inc. and its subsidiaries

1.3 Register Nomenclature

TABLE 1-3: REGISTER NOMENCLATURE

Register Bit Type Notation	Register Bit Description
R	**Read:** A register or bit with this attribute can be read.
W	**Write:** A register or bit with this attribute can be written.
RO	**Read only:** Read only. Writes have no effect.
RS	**Read to Set:** This bit is set on read.
WO	**Write only:** If a register or bit is write-only, reads will return unspecified data.
W1S	**Write One to Set:** Writing a one sets the value. Writing a zero has no effect.
W1C	**Write One to Clear:** Writing a one clears the value. Writing a zero has no effect.
WC	**Write Anything to Clear:** Writing anything clears the value.
LL	**Latch Low:** Clear on read of register.
LH	**Latch High:** Clear on read of register.
SC	**Self-Clearing:** Contents are self-cleared after the being set. Writes of zero have no effect. Contents can be read.
RO/LH	**Read Only, Latch High:** Bits with this attribute will stay high until the bit is read. After it is read, the bit will remain high, but will change to low if the condition that caused the bit to go high is removed. If the bit has not been read, the bit will remain high regardless of a change to the high condition.
NASR	**Not Affected by Software Reset.** The state of NASR bits do not change on assertion of a software Reset.
RESERVED	**Reserved Field:** Reserved fields must be written with zeros, unless otherwise indicated, to ensure future compatibility. The value of reserved bits is not guaranteed on a read.

1.4 References

- USB Power Delivery and USB Type-C® Specifications: http://www.usb.org/
- VESA DisplayPort Alternate Mode Specification 1.0: http://www.vesa.org

© 2024 Microchip Technology Inc. and its subsidiaries

2.0 INTRODUCTION

2.1 General Description

The MCP22350 is a highly integrated, small form factor USB Type-C Power Delivery (PD) Port Controller designed to adhere to the *USB Type-C® Cable and Connector Specification* and *USB Power Delivery 3.1 Specification*. The MCP22350 provides cable plug orientation and detection for a USB Type-C receptacle and implements baseband communication with a partner USB Type-C device via the integrated USB Power Delivery 3.1 MAC. The MCP22350 is designed to function as a Companion Power Delivery Controller to an external Microchip MCU/SoC using the integrated SPI interface. The device is capable of controlling the Power Delivery current and voltage using an external power device.

The MCP22350 integrates many of the analog discrete components required for USB Type-C PD applications, including two VCONN FETs with Rp/Rd switching, a power switch, and current and voltage sense circuitry for overvoltage/current detection. By integrating many of the analog discrete components required for USB Type-C PD applications, the MCP22350 provides a low cost, low power, small footprint solution for consumer (notebooks, desktop PCs, smartphones, tablets, monitors, docking stations) and industrial applications.

To enable the MCP22350 to efficiently support dead battery use cases, an integrated power switch is provided to select between two external 3.3V supplies (VBUS and main). This effectively allows connection detection and system wakeup without external processor intervention (external processor in Sleep mode).

The MCP22350 is capable of negotiating alternate modes over USB Type-C connectors using the Power Delivery 3.1 protocol. DisplayPort operation over USB Type-C connectors is supported in addition to other major protocols.

A system diagram utilizing the MCP22350 is shown in Figure 2-1. An internal block diagram of the MCP22350 is shown in Figure 2-3.

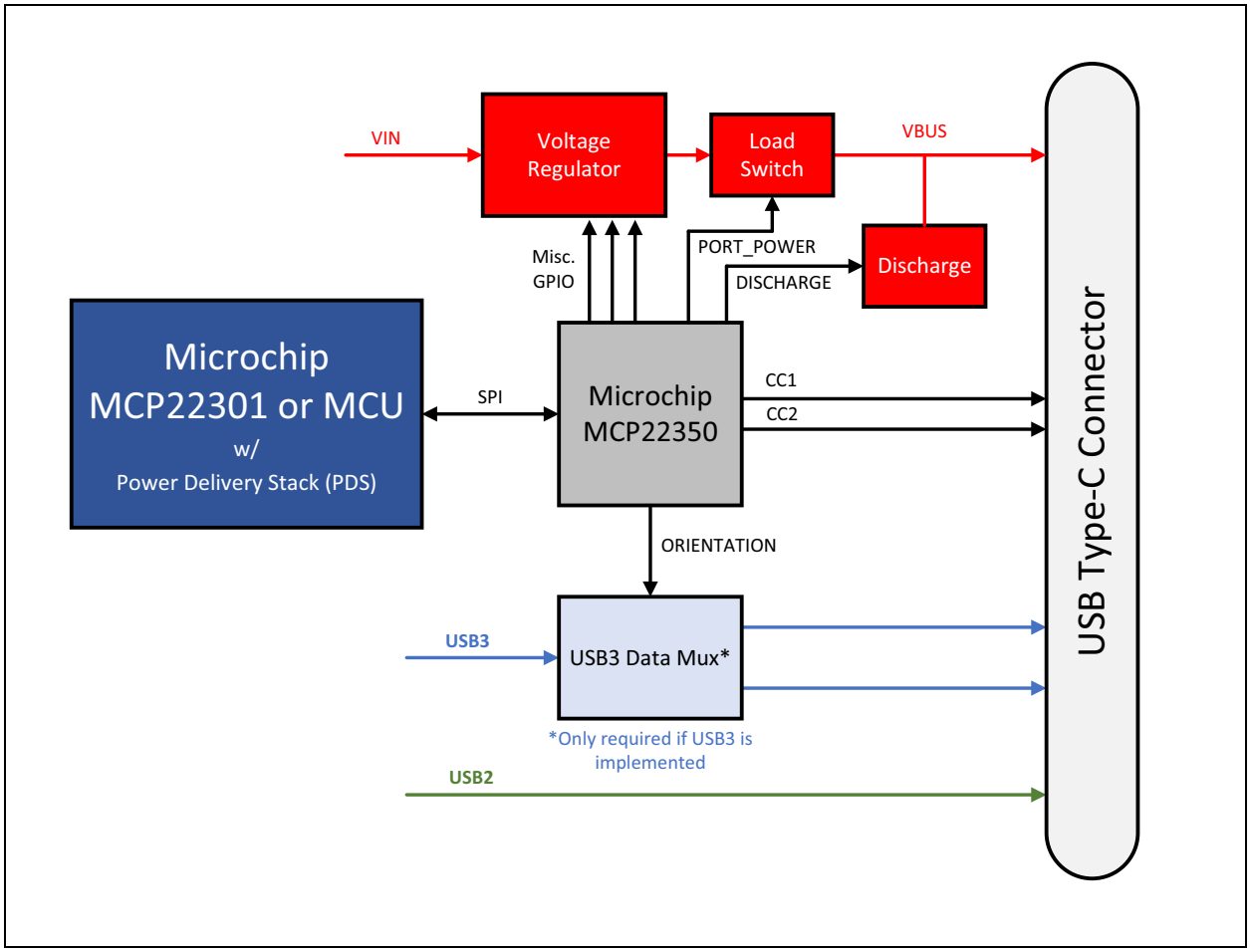

FIGURE 2-1: *Typical USB Power Delivery Source Application System Diagram.*

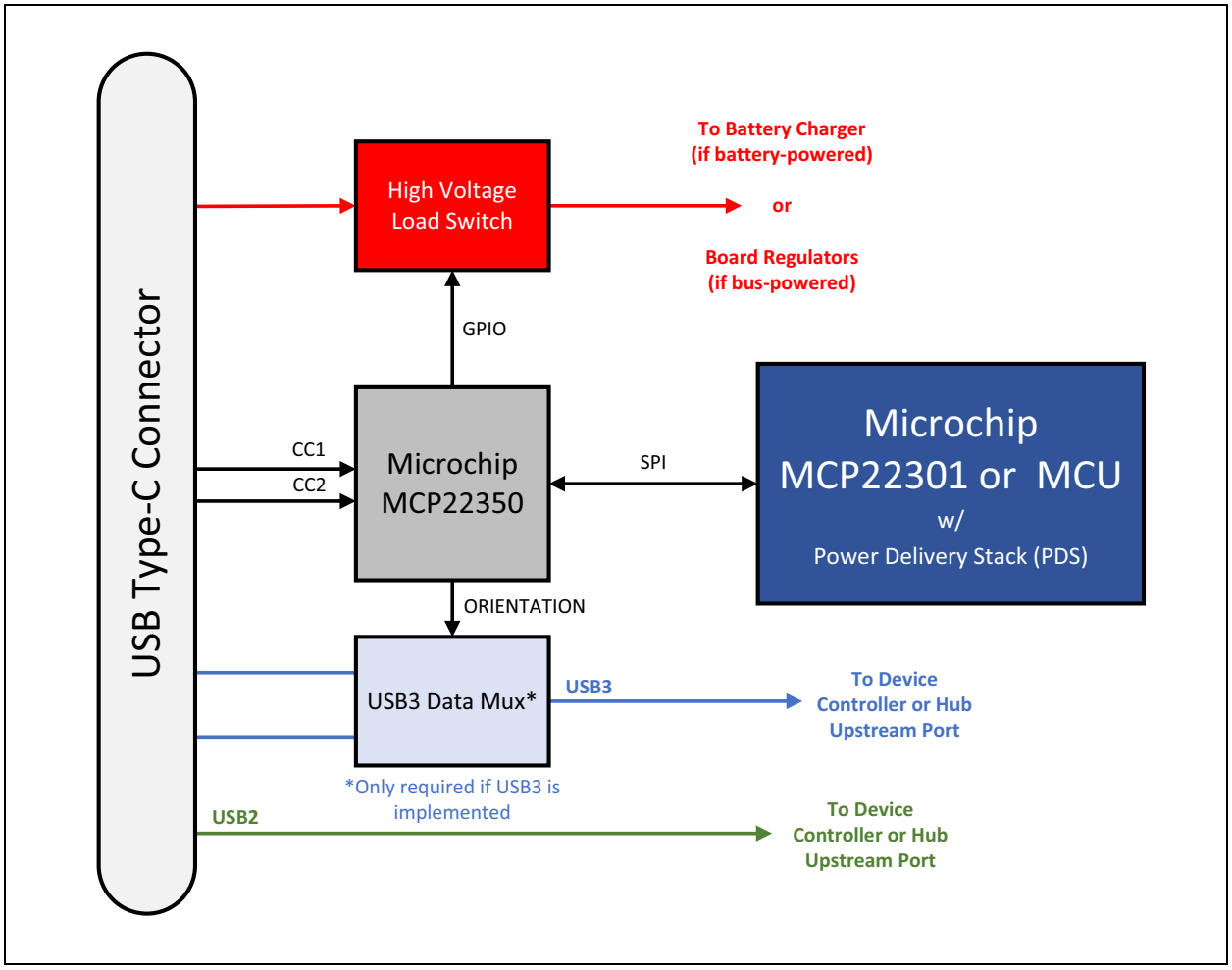

FIGURE 2-2: *Typical USB Power Delivery Sink Application System Diagram.*

© 2024 Microchip Technology Inc. and its subsidiaries

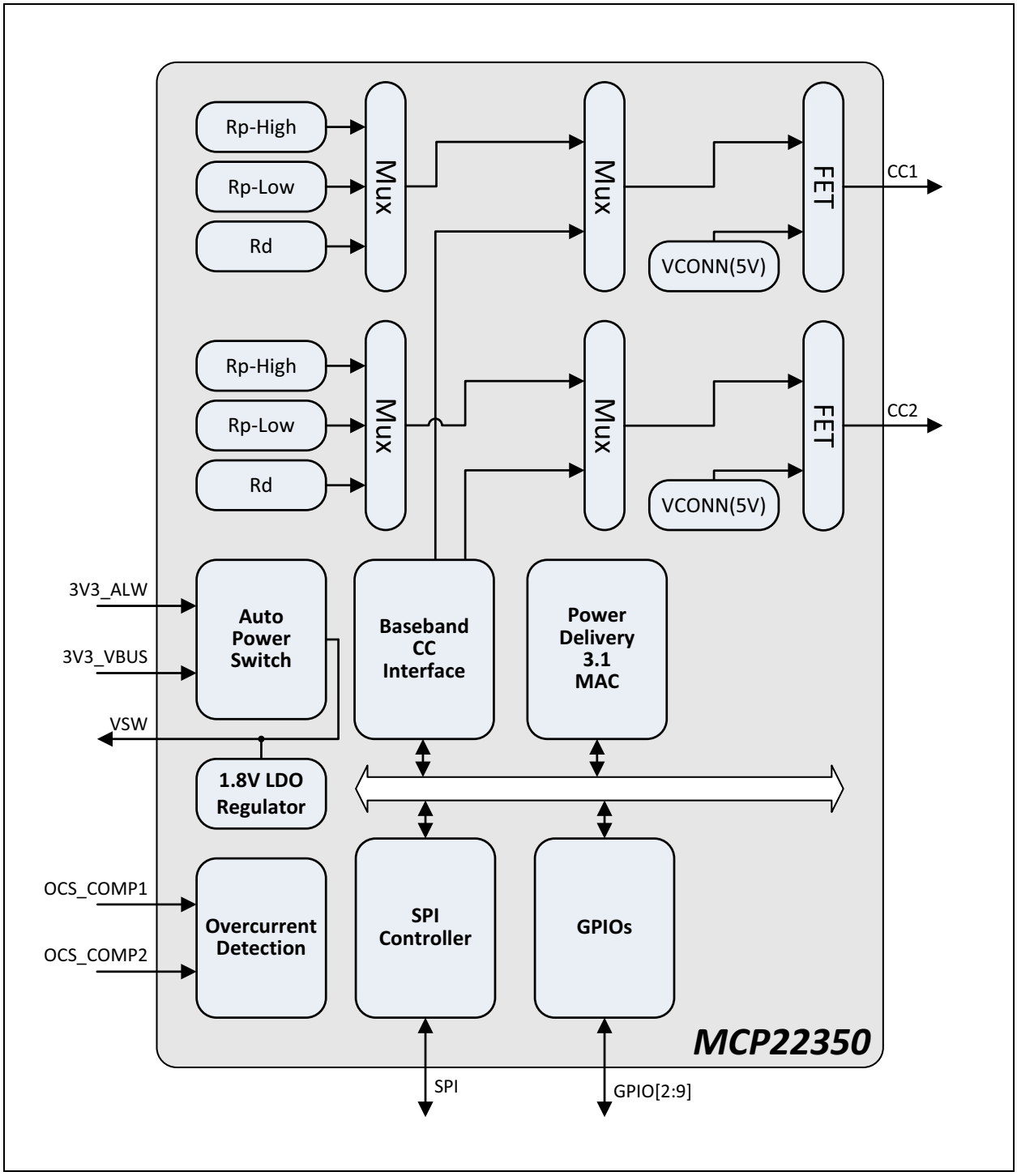

FIGURE 2-3: *Internal Block Diagram.*

2.2 MCP22350 Family Differences

The MCP22350 is available in two versions:

- MCP22350-1, without dead battery support in hardware
- MCP22350-2, with dead battery support in hardware

© 2024 Microchip Technology Inc. and its subsidiaries

3.0 PIN DESCRIPTIONS AND CONFIGURATION

3.1 Pin Assignments

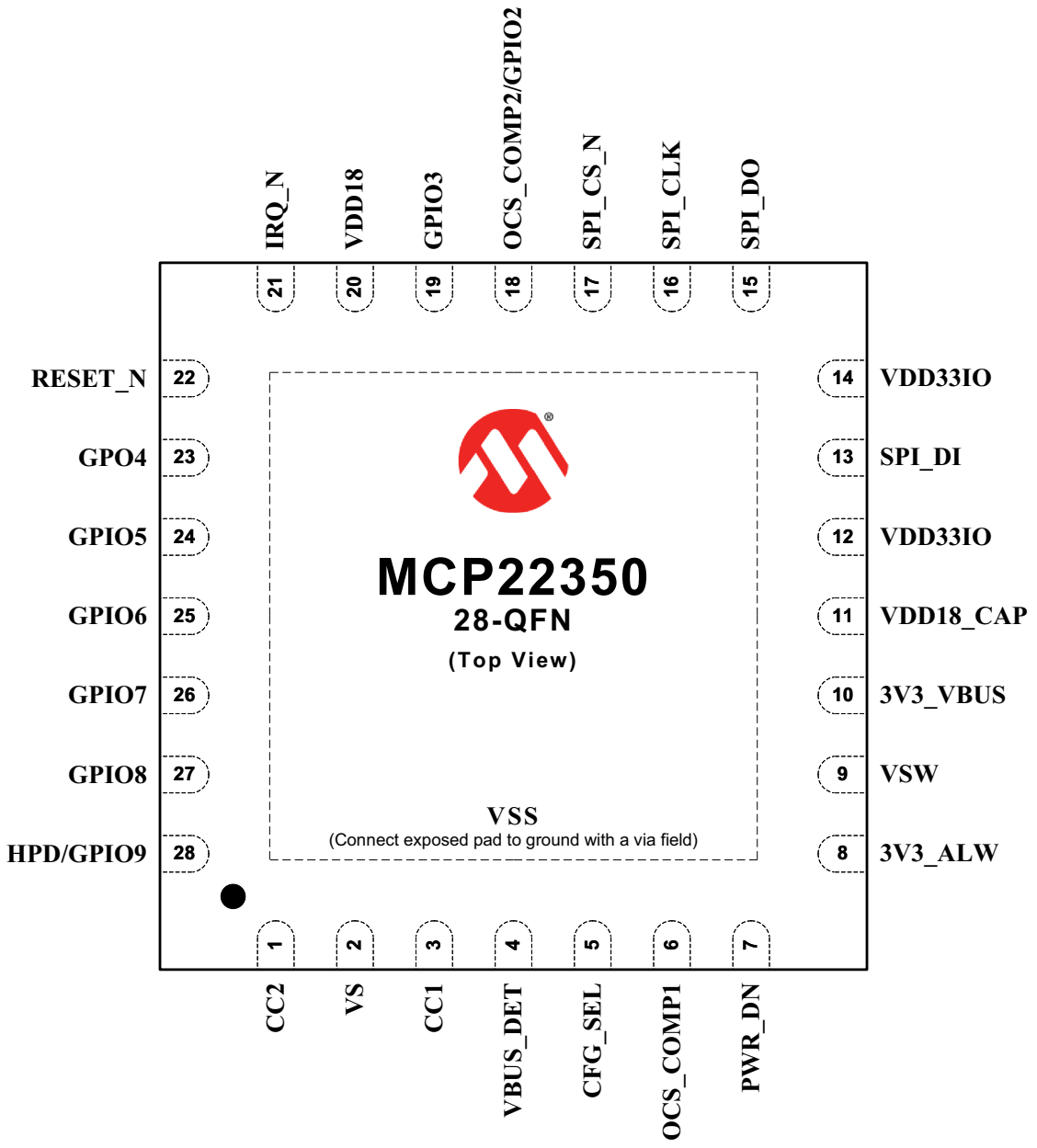

Note: Exposed pad (VSS) on bottom of package must be connected to ground with a via field.

FIGURE 3-1: *MCP22350 Pin Assignments (Top View).*

© 2024 Microchip Technology Inc. and its subsidiaries

TABLE 3-1: MCP22350 PIN ASSIGNMENTS

Pin	Pin Name	Pin	Pin Name
1	CC2	15	SPI_DO
2	VS	16	SPI_CLK
3	CC1	17	SPI_CS_N
4	VBUS_DET	18	OCS_COMP2/GPIO2
5	CFG_SEL	19	GPIO3
6	OCS_COMP1	20	VDD18
7	PWR_DN	21	IRQ_N
8	3V3_ALW	22	RESET_N
9	VSW	23	GPO4
10	3V3_VBUS	24	GPIO5
11	VDD18_CAP	25	GPIO6
12	VDD33IO	26	GPIO7
13	SPI_DI	27	GPIO8
14	VDD33IO	28	HPD/GPIO9

3.2 Pin Descriptions

This sections details the functions of the various device signals.

TABLE 3-2: PIN DESCRIPTIONS

Name	Symbol	Buffer Type	Description
USB Type-C®			
Configuration Channel 1	CC1	AIO	Configuration Channel (CC) used in the discovery, configuration and management of connections across a USB Type-C cable. Refer to Section “CC Comparator” for additional information.
Configuration Channel 2	CC2	AIO	Configuration Channel (CC) used in the discovery, configuration and management of connections across a USB Type-C cable. Refer to Section “CC Comparator” for additional information.
SPI Interface			
SPI Clock	SPI_CLK	IS	SPI clock. The maximum supported SPI clock frequency is 25 MHz.
SPI Data Out	SPI_DO	O8	SPI output data.
SPI Data In	SPI_DI	IS	SPI input data.
SPI Chip Enable	SPI_CS_N	IS	Active low SPI chip enable input.
Power Delivery Control			
Hot Plug Detect	HPD	IS/O8	DisplayPort Hot Plug Detection. Refer to Section “HDMI/ DisplayPort Hot Plug Detect (HPD)” for additional information.
Miscellaneous			
Interrupt	IRQ_N	OD8	Active low interrupt signal.

TABLE 3-2: PIN DESCRIPTIONS (CONTINUED)

Name	Symbol	Buffer Type	Description
VBUS Detection	**VBUS_DET**	AIO	Scaled down version of VBUS. Tie this signal to VBUS via a resistor divider. **APPLICATION NOTE:** The recommended values for the VBUS resistor divider are 90.9k over 10k to form a 10:1 scaled version of VBUS.
Configuration Select	**CFG_SEL**	AIO	This multi-level configuration signal is sampled after a system Reset to select the device's default mode of operation based on the connected 1% precision resistor value. **Note:** This pin can be used for customer specific purposes to provide a discrete value (0-15) based upon the attached resistor value.
General Purpose I/O 0-9	**GPIO2**, **GPIO3**, **GPO4**, **GPIO5**, **GPIO6**, **GPIO7**, **GPIO8**, **GPIO9**	IS/O8/ OD8 (PU)	The general purpose I/O signals are fully programmable as either a push-pull output, an open-drain output, or a Schmitt-Triggered input (except **GPO4**). A programmable pull-up may optionally be enabled. **Note:** The functionality of these GPIOs is defined and controlled by USB Power Delivery firmware executed external to the MCP22350 (in the Microchip MCU or SoC). **Note:** The **GPO4** general purpose signal must be augmented with a weak pull-down in order to prevent the device from entering a test mode on start-up. **Note:** These signals should be tied to ground when unused. **Note:** External pull-ups and pull-downs shall be placed on GPIO pins to ensure that when in the Reset state the inputs to external devices are driven to a valid state.
System Reset	**RESET_N**	IS	Active low system Reset. **Note:** If this signal is unused, it must be pulled up to **VDD33IO**.
Power Down	**PWR_DN**	AI	When asserted, this signal places the device into the power-down state. **Note:** Tie this signal to ground when unused.
Over-Current Sense Comparator 1	**OCS_COMP1**	AI	This pin is used by the integrated OCS comparator to detect for error conditions. The range of operation is 0V – 2.5V and the comparator thresholds are fully software configurable. **Note:** Tie this signal to ground when unused.
Over-Current Sense Comparator 2	**OCS_COMP2**	AI	This pin is used by the integrated OCS comparator to detect for error conditions. The range of operation is 0V – 2.5V and the comparator thresholds are fully software configurable. **Note:** Tie this signal to ground when unused.

© 2024 Microchip Technology Inc. and its subsidiaries

TABLE 3-2: PIN DESCRIPTIONS (CONTINUED)

Name	Symbol	Buffer Type	Description
Power/Ground			
+3.3V Voltage Switch Supply	**VSW**	P	+3.3V power supply output from the integrated power switch. **Note:** This pin also provides capacitance for the integrated power switch and must be connected to a 1 uF (<100 Mohm ESR) capacitor to ground.
+3.3V VBUS Supply	**3V3_VBUS**	P	+3.3V main power supply input derived from VBUS to the integrated power switch. **Note:** The 2.2 µF capacitor is only required for the MCP22350-2.
+3.3V Always Supply	**3V3_ALW**	P	+3.3V main power supply input to the integrated power switch. **Note:** This pin must be connected to a 2.2 µF capacitor to ground.
+3.3V I/O Power Supply Input	**VDD33IO**	P	+3.3V I/O power supply input.
+1.8V Core Voltage Power Supply Input	**VDD18**	P	+1.8V core voltage power supply input.
+1.8V Digital Core Power Supply Capacitor	**VDD18_CAP**	P	+1.8V digital core power supply capacitor. This signal must be connected to a 1 µF capacitor to ground for proper operation.
+5V VS Power Supply Input	**VS**	P	+5V VCONN FET power source.
Ground	**VSS**	P	Ground pins.

3.3 Power Connections

The MCP22350 requires power from a 3.3V domain. It has an integrated 1.8V regulator.

The MCP22350 also has an integrated 3.3V power switch which can be used to allow for multiple system power sources when implemented within a battery-powered system which may be charged from the Type-C port. Typically, an application which utilizes the integrated 3.3V power switch will also require the dead battery support available in the MCP22350-2.

© 2024 Microchip Technology Inc. and its subsidiaries

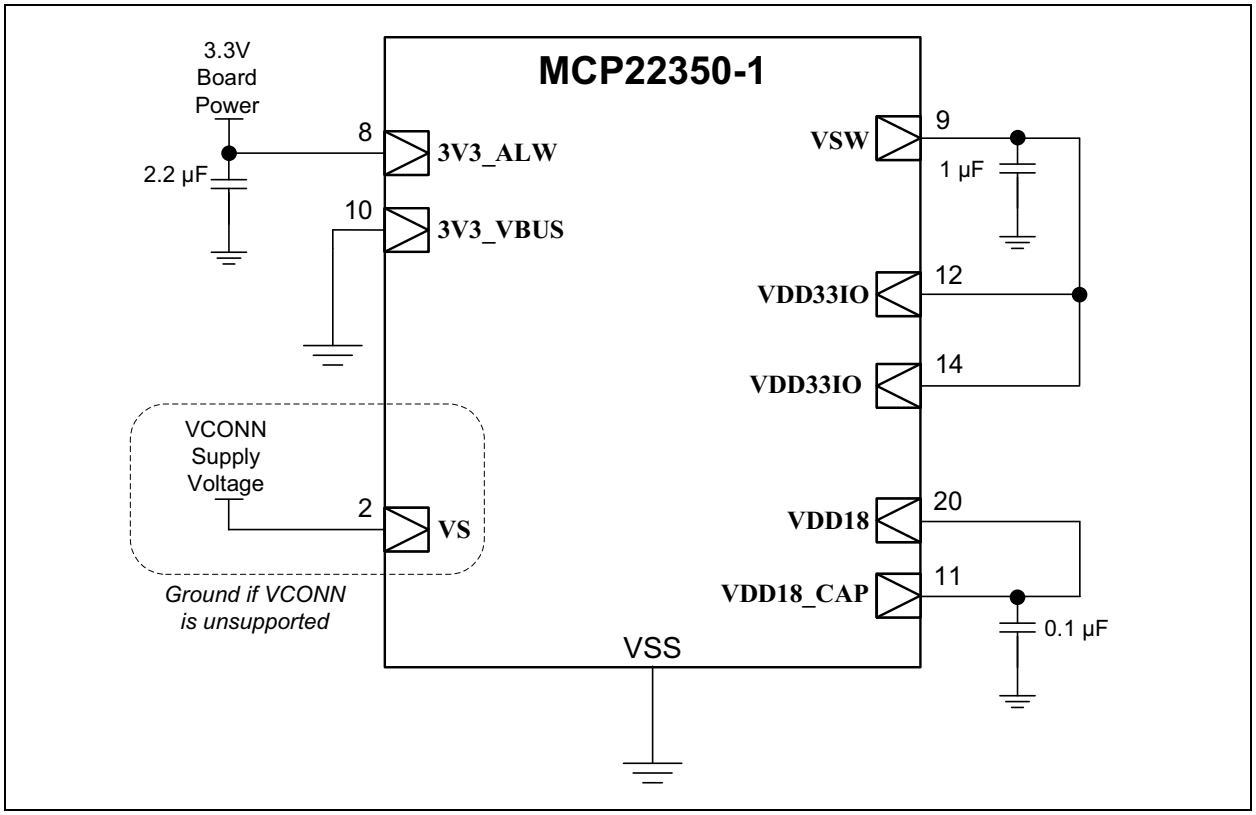

FIGURE 3-2: *Power Connections for MCP22350-1.*

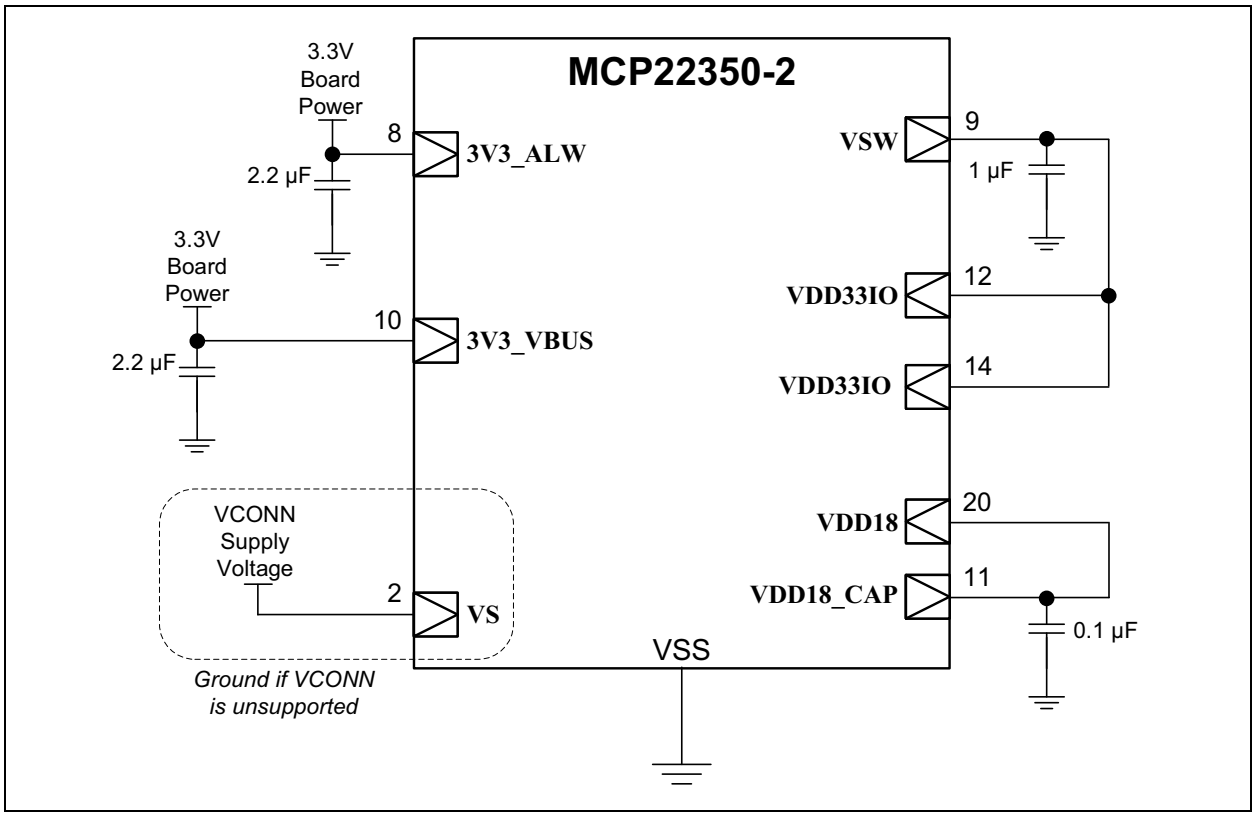

FIGURE 3-3: *Power Connections for MCP22350-2.*

© 2024 Microchip Technology Inc. and its subsidiaries

4.0 REGISTER MAP

This chapter provides the device register map, summarizing the various directly addressable System Control and Status Registers (CSRs). All CSRs are directly accessible via the device's internal SPI Client Controller. Detailed descriptions of the System CSRs are provided in the chapters corresponding to their function. Table 4-1 provides a summary of all directly addressable CSRs and their corresponding addresses.

Note: Register bit type definitions are provided in Section 1.3, "Register Nomenclature," on page 4.

TABLE 4-1: DEVICE REGISTER MAP

Address	Registers
3400h-FFFFh	RESERVED
3000h-33FFh	Watchdog Timer Registers
2C00h-2FFFh	RESERVED
2800h-2BFFh	Baseband CC Interface Registers
2000h-27FFh	RESERVED
1C00h-1FFFh	Power Switch Registers
1800h-1BFFh	Power Delivery MAC Registers
1400h-17FFh	RESERVED
1000h-13FFh	Clocks and Power Management Registers
0C00h-0FFFh	DisplayPort HPD Registers
0800h-0BFFh	Cable Orientation and Detection Registers
0400h-07FFh	RESERVED
0000h-03FFh	System Control Registers

Note: RESERVED address space must not be written under any circumstances. Failure to heed this warning may result in untoward operation and unexpected results.

© 2024 Microchip Technology Inc. and its subsidiaries

5.0 SPI CLIENT CONTROLLER

This chapter details the integrated SPI client controller (**SPI_DI**, **SPI_DO**, **SPI_CLK**, and **SPI_CS_N**). The SPI client controller can be used for host CPU serial management and data transfer, and it allows host access to all device Configuration and Status Registers.

5.1 SPI Overview

The SPI client module provides a low pin count synchronous client interface that facilitates communication between the device and a host system. The SPI client allows access to the System CSRs, internal FIFOs and memories. It supports single and multiple register read and write commands with incrementing, decrementing and static addressing. Only a Single bit lane is supported in SPI mode at up to 25 MHz.

The following is an overview of the functions provided by the SPI Client:

- **Fast Read:** Four-wire (clock, select, data in and data out) reads. Executes serial commands, address processing and data retrieval. This is called “fast” read for historical reasons, and is the only read command supported. There is a single dummy byte required for first access. Single and multiple register reads with incrementing, decrementing or static addressing.
- **Write:** Four-wire (clock, select, data in and data out) writes at up to 25 MHz. Executes serial commands, address processing and data retrieval. Single and multiple register writes with incrementing, decrementing or static addressing.

5.2 SPI Client Operation

A SPI frame starts on the falling edge of **SPI_CS_N** and ends with **SPI_CS_N** rising. At the edges of **SPI_CS_N**, the **SPI_CLK** clock may be at its Reset state of either low (Mode 0) or high (Mode 3), at the option of the host.

Input data on the **SPI_DI** pin (often called “MOSI”) is sampled on the rising edge of the **SPI_CLK** input clock. Output data is launched on the **SPI_DO** pin (often called “MISO”) with the falling edge of the clock. While the **SPI_CS_N** chip select input is high, the **SPI_DI** and **SPI_CLK** inputs are ignored and the **SPI_DO** output is floating.

Each frame starts with an 8-bit instruction byte, transmitted by the host, and it is accepted on **SPI_DI** starting at the first rising edge of the input clock after **SPI_CS_N** goes active.

For both write and (fast) read instructions, two address bytes follow the instruction byte. The address field expresses a byte address. Fourteen address bits specify the address. The remaining two bits [15:14] constitute the DIR subfield of the address field, which specifies whether the address is Auto-Incremented (00b) or Auto-Decremented (10b) for consecutive data bytes in the frame. A special static address coding (11b) keeps the address static throughout the frame of data, causing a single byte address to be accessed repeatedly if multiple bytes are transferred in the frame. To minimize the effect of a software error that increments beyond the address space, the DIR subfield encoding 01b is reserved and should be decoded in implementation to be the same as 00b.

For the fast read instruction, one dummy byte follows the address bytes. The dummy byte occupies 8 bits, one per clock.

The device will normally not drive **SPI_DO** during the instruction, address or dummy byte cycles, but see Section 5.2.2, "Access During and Following Power Management," on page 15 for a special case.

For fast read instructions, one or more 8-bit data fields follow the dummy byte. For write instructions, they immediately follow the address bytes.

Individual bytes in instruction, address and data fields are transferred with the Most Significant bit (MSb) first. The two-byte address field is transferred with the Most Significant Byte (MSB) first. Multi-byte data values are transferred in the order specified by the DIR subfield of the address field (bits [15:14]), so their order can be effectively selected by using Increment mode (starting from the lowest byte address) or Decrement mode (starting from the highest byte address).

The SPI interface supports a minimum time of 50ns between successive commands (a minimum **SPI_CS_N** inactive time of 50ns).

The instructions supported by the SPI client controller are listed in Table 5-1. Unsupported instructions are reserved and must not be used.

TABLE 5-1: SPI INSTRUCTIONS

Instruction	Description	Bus Bit Width	Inst. Code	Address Bytes	Dummy Bytes	Data bytes	Max Freq.
Read							
FASTREAD	Read, higher speed format	1	0Bh	2	1	1 to ∞	25 MHz
Write							
WRITE	Write	1	02h	2	0	1 to ∞	25 MHz

© 2024 Microchip Technology Inc. and its subsidiaries

5.2.1 DEVICE INITIALIZATION

Until the device has been initialized to the point where the various configuration inputs are valid, the SPI interface will not respond to or be affected by any external pin activity.

Once device initialization completes, the SPI interface will ignore the pins until a rising edge of **SPI_CS_N** is detected.

If the device initialization completes during an active cycle (**SPI_CS_N** low), the trailing end of the frame must be seen (**SPI_CS_N** returning high) before any internal registers are affected or the state of the SPI interface changes.

The first SPI access after device initialization must always be a dummy read to the SPI Test Register (SPI_TEST).

5.2.1.1 SPI Client Read Polling for Initialization Complete

With an external weak pull-up resistor present on **SPI_DO**, a value of FFh will appear to have been read from any internal register while the device is uninitialized. By verifying that the SPI Test Register (SPI_TEST) has at least one “0” bit in it, it is possible to tell when the device is initialized.

5.2.2 ACCESS DURING AND FOLLOWING POWER MANAGEMENT

During any power management mode other than D0, reads and writes are ignored internally except to begin a wake of the device internally on the falling edge of **SPI_CS_N**. The wake event on SPI traffic is local to the specific device, and does not affect the states of other devices even on the same SPI bus. Until waking is complete (up to oscillator lock), the SPI interface holds the **SPI_DO** pin low for the duration of the **SPI_CS_N** low time.

Until the device is awake, any read access performed by the host will appear to have returned all ‘1’ bits. To determine when the device is awake and the SPI interface functional, the SPI Test Register (SPI_TEST) should be repeatedly polled by the host in separate frames (**SPI_CS_N** low then high). Once a correct, non-zero value is read, the interface can be considered functional. As an alternative to polling, an **IRQ_N** pin assertion can be used to indicate the device is ready.

Once the power management mode changes back to ACTIVE, the SPI interface will still ignore the **SPI_CLK** and **SPI_DI** pins, following **SPI_CS_N** low with **SPI_DO** low, until **SPI_CS_N** is seen high. At the next **SPI_CS_N** falling edge, SPI communication will continue normally.

At any time after performing SPI traffic, the device will not go back to a non-communicating power state until explicitly allowed to do so by a command from the SPI host.

Figure 5-1 illustrates the sequence of waking from SPI traffic.

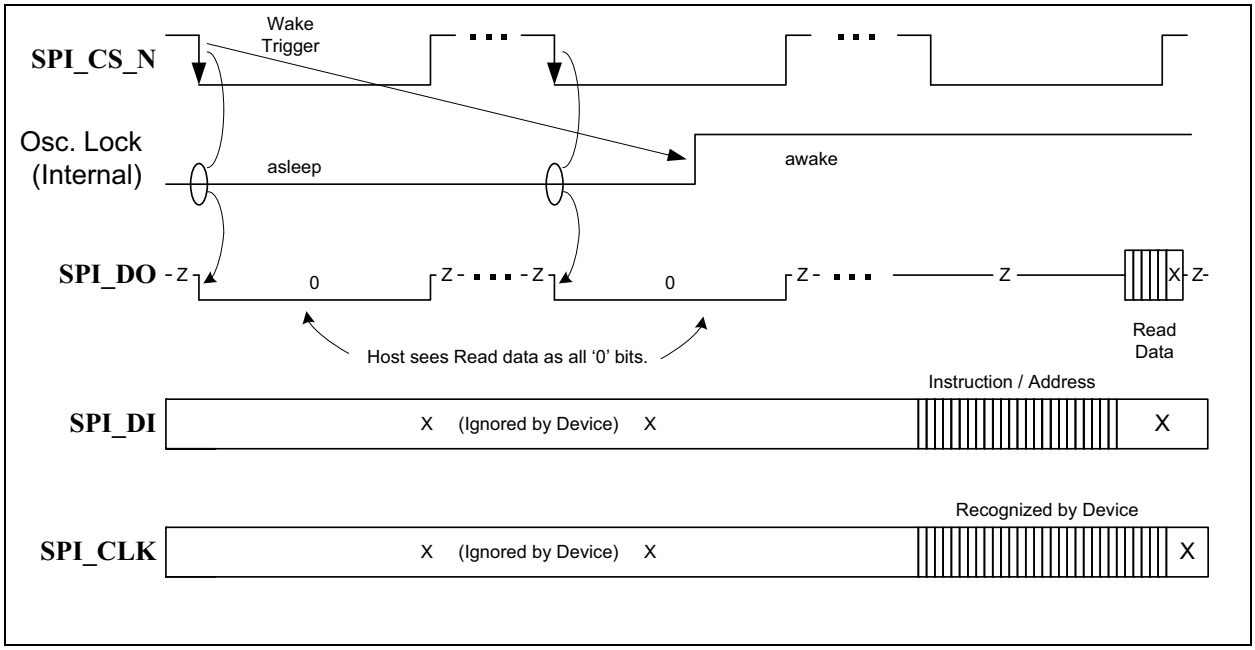

FIGURE 5-1: *Power Management Wake on SPI Traffic.*

5.2.3 SPI READ COMMAND (FAST READ)

The fast read command is supported by the SPI client. A single byte, or multiple bytes, may be read in a single frame (**SPI_CS_N** low).

Fast read is the only form of read access supported by the device. The instruction inputs the instruction code, the address and a dummy byte on **SPI_DI**, and outputs the data one bit per clock on **SPI_DO**.

The SPI client interface is selected by first bringing **SPI_CS_N** active. The 8-bit FASTREAD instruction, 0Bh, is input into the **SPI_DI** pin, followed by the two address bytes and one dummy byte. The address bytes specify a byte register address within the device, and also specify how addresses are sequenced for successive bytes in a multiple byte read (below). The contents of the dummy byte are don't-care.

On the falling clock edge following the rising edge of the last dummy bit, the **SPI_DO** pin is driven starting with the MSb of the selected register byte. The remaining register bits are shifted out on subsequent falling clock edges.

The **SPI_CS_N** input is brought inactive to conclude the cycle. The **SPI_DO** pin is floated by the device in response.

5.2.3.1 Multiple Byte Reads

Additional byte reads beyond the first are performed by the host by continuing the clock pulses while **SPI_CS_N** is active. The upper two bits [15:14] (DIR subfield) of the address specify Auto-Incrementing (DIR=00b) or Auto-Decrementing (DIR=10b) or Static (fixed) (DIR=11b) for successive bytes read. Maintaining a static internal address is provided for FIFO read/write or low-level register polling within a single frame, if the host supports it.

Towards the end of the current one-byte output shift, the address is incremented or decremented, if appropriate, and another synchronized capture sequence is done.

5.2.3.2 Fast Read

Figure 5-2 illustrates a typical single and multiple register fast read for SPI mode.

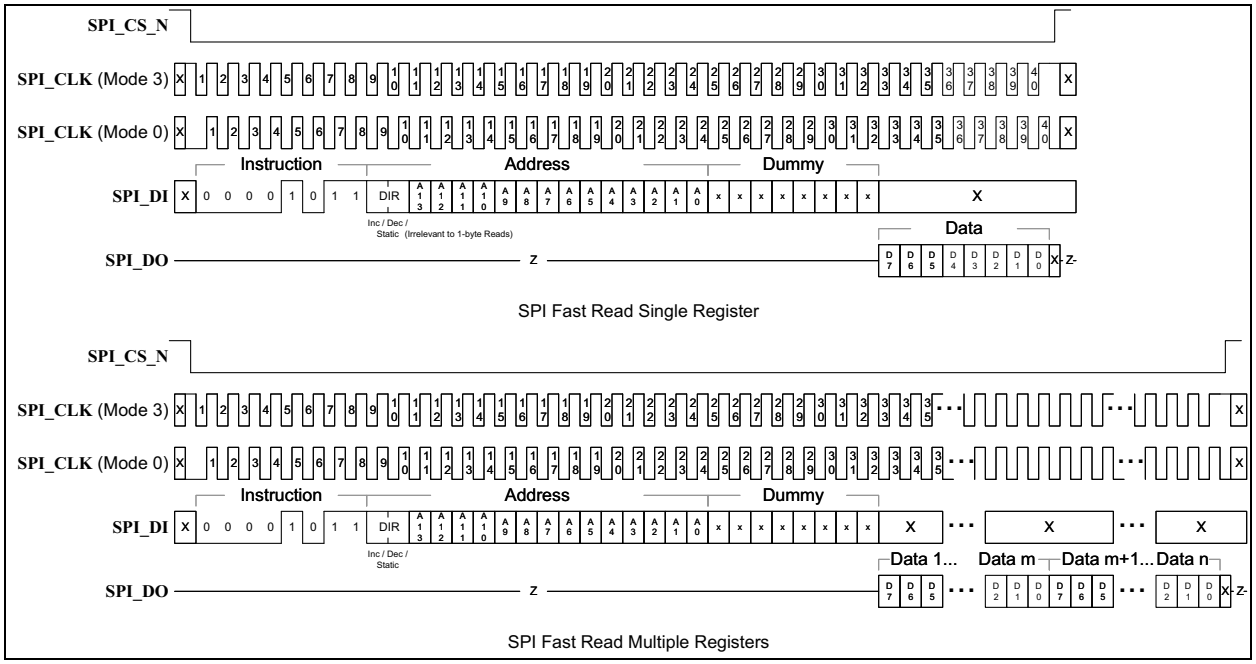

FIGURE 5-2: *SPI Fast Read.*

5.2.4 SPI WRITE COMMANDS

The following write commands are supported by the SPI client controller:

- Write
- Multiple Writes

5.2.4.1 Write

The Write instruction provides the instruction code, address and data bytes on the **SPI_DI** pin, one bit per clock.

The SPI transfer is started by the host first driving **SPI_CS_N** active. The 8-bit WRITE instruction, 02h, is given on the **SPI_DI** pin, followed by the two address bytes. The address bytes specify a byte address within the device, and a direction control subfield (DIR).

© 2024 Microchip Technology Inc. and its subsidiaries

The data immediately follows the address bytes on the **SPI_DI** pin, starting with the MSb of the first byte. The device inputs the data from the **SPI_DI** pin, shifted in on each subsequent rising clock edge.

5.2.4.2 Multiple Writes

Multiple writes are performed by the host by continuing the clock pulses and **SPI_DI** data while **SPI_CS_N** remains active. The upper two bits [15:14] of the address constitute the DIR subfield, and specify Auto-Incrementing (DIR=00b), Auto-Decrementing (DIR=10b) or Static Addressing. The internal byte address is incremented, decremented, or kept fixed (static) based on these bits. Maintaining a fixed internal address may be useful for FIFO access, register "bit-banging" or other repeated activity.

The data write to the register occurs after the full register contents are input: this depends on the defined size of the register. In the event that the full register is not written when **SPI_CS_N** is returned high, the write is considered invalid and the register is not affected.

The **SPI_CS_N** input is then brought inactive to conclude the cycle.

Figure 5-3 illustrates a typical SPI single and multiple register write.

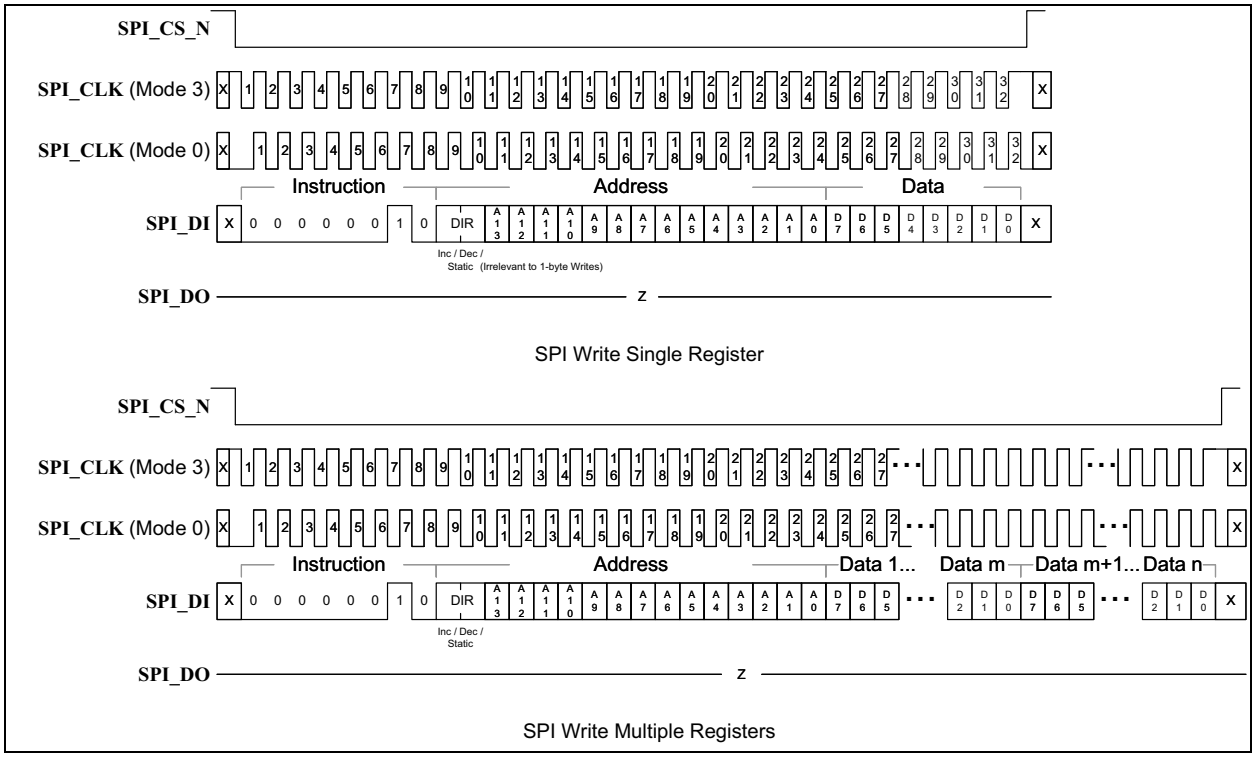

FIGURE 5-3: *SPI Write.*

5.2.5 SPECIAL CSR HANDLING

5.2.5.1 Live Bits

Register values are latched (registered) at the beginning of each register read to prevent the host from reading a changing value. The latching occurs individually per register in a multiple register read sequence.

5.2.5.2 Change-on-Read Registers and FIFOs

Any single-byte register that triggers a side effect from a read operation (for example, containing "clear on read" bits or advancing a FIFO structure) triggers only after the host has begun accessing the value. The value seen by the host will always be the original value and never the updated result of the side effect.

For a multiple-byte register that is considered a single unit, the change may be delayed until all bytes of the register have been read. In the event that the host sends a no-acknowledge on one of the first bytes of a multi-byte register, or a start or stop condition occurs unexpectedly before the acknowledge of the full register, the read may be considered invalid and the side effect not triggered.

Registers read in multiple-register read access will trigger multiple side effects, occurring as they are read. The following register has read side effects:

Watchdog Count Register (WDT_COUNT)

5.2.5.3 Live Bits that are also Change-on-Read

As described above, the current value from a register with live bits (as is the case of any register) is captured and latched as output data, and Change on Read bits are then changed in the original register. To prevent loss of a hardware event that occurs following the data capture but before the Change on Read, these hardware events are held pending until after the read action and after any change due to the read. This sequence also ensures an edge in the bit due to the hardware event.

© 2024 Microchip Technology Inc. and its subsidiaries

6.0 CLOCKS, RESETS, AND POWER MANAGEMENT

This section details the various clocks, Resets, and power managements states of the device:

6.1 Clocks

The following internal clocks are generated by the device:

- **48 MHz Relaxation Oscillator**
- **20 KHz Keep Alive Oscillator**
- **Ring Oscillator**

These oscillators can be manually enabled/disabled via software in the Clock Control Register (CLK_CTL).

6.2 Power States

The device supports the following power states, as defined in their respective sub-sections:

- SLEEP
- HIBERNATE
- STANDBY
- ATTACHED IDLE (FRS Enabled)
- ATTACHED IDLE (FRS Disabled)
- ACTIVE

6.2.1 SLEEP

This is the lowest power state of the device. The SLEEP state is entered via assertion of the **PWR_DN** pin. Virtually all of the device is powered off in this mode with minimal circuity in the 3.3V domain to detect deassertion of **PWR_DN**.

This mode is intended to minimize power consumption when the device is not being used in battery-powered applications. In these applications, a wake-up event such as a button press can cause the host CPU to deassert **PWR_DN**.

6.2.2 HIBERNATE

In this state, the port is disabled by the USB PD firmware and the **PWR_DN** pin is low. Attach detection is disabled due to CC terminations in the high-impedance state.

6.2.3 STANDBY

STANDBY is the lowest power functional state of the device. The majority of the device is powered off in this state. The internal CC comparator and 20 KHz oscillator are enabled in this state as well as requisite analog components (1.8V LDO, PORs, Biases, etc).

The CC lines are constantly monitored for an attach condition which shall result in an interrupt assertion to the host. If an attachment has been made, this state can detect a change in the partner's advertisement as well as a detach.

STANDBY is the power state that the MCP22350 device will be in when in USB Type-C Unattached.SRC/SNK.

6.2.4 ATTACHED IDLE (FRS ENABLED)

In this state, a USB Type-C device is connected and the USB PD bus is idle (no USB packets in transit). The CC signals are constantly being monitored for packet transmission and Fast Role Swap (FRS) signal detection is enabled.

6.2.5 ATTACHED IDLE (FRS DISABLED)

In this state, a USB Type-C device is connected and the USB PD bus is idle (no USB packets in transit). The CC signals are constantly being monitored for packet transmission and Fast Role Swap (FRS) signal detection is disabled.

The following asynchronous wake-ups are supported from this state:

- Asynchronous SPI Wakeup
- Power Delivery MAC Wakeup

6.2.6 ACTIVE

This state defines the condition of the device after an attachment occurred. In this state, Power Delivery communication is supported. This state is also used for any condition in which the 48 MHz Relaxation Oscillator must be enabled, such as when it is desired to debounce a GPIO within the micro-second range.

When transmitting a Power Delivery packet, an additional 5 mA may be consumed. Additional power consumption results from enabling the OCS comparator, VBUS comparator and other modules. When VCONN FETs are enabled, there is an additional 70 mW of power consumption.

6.3 Asynchronous SPI Wakeup

MCP22350 supports asynchronous wakes on the SPI interface. The SPI protocol for this device is defined such that there is no requirement that the SPI transaction must be repeated.

The following steps illustrate the SPI wake function. Initially the Ring Oscillator and 48 MHz Oscillator are disabled.

1. The device is powered down.
2. The host initiates an SPI transaction to the SPI Test Register (SPI_TEST) which, when the device is operational, returns a non-zero value. The device drives **SPI_DO** to 0b while in power-down.
3. The device detects reception of an SPI message. The Ring Oscillator is asynchronously enabled and used as a clock source for the power management logic.

© 2024 Microchip Technology Inc. and its subsidiaries

4. After a delay of approximately 5 us the oscillator stabilizes and clocks the SPI controller.
5. The device processes the next received SPI transaction.
6. The SPI transaction(s) complete(s).
7. The host checks the device status to see if there are any pending transactions. The SPI transaction may have initiated a PD transmission or conversely a coincident PD transaction may be in the process of being received.
8. After the host confirms the device has no pending transactions, it powers down the device by disabling the Ring Oscillator and 48 MHz Relaxation Oscillator via the Clock Control Register (CLK_CTL).
9. The device drives **SPI_DO** to 0b and awaits an asynchronous SPI wake.

6.4 Power Delivery MAC Wakeup

The PD MAC is capable of asynchronous wake up upon reception of a PD packet. This enables the device to be placed in STANDBY mode and minimize power consumption.

The following steps illustrate the RX PD MAC wake function. Initially, the Ring Oscillator and the 48 MHz Relaxation Oscillator are disabled. The 20 KHz Keep Alive Oscillator is enabled but not used in the wake process.

1. In order to receive a PD message, the RX AFE is enabled via software and the trip point is set via the CC RX DAC Control Register (CC_RX_DAC_CTL) and CC RX DAC Filter Register (CC_RX_DAC_FILT).
2. The PD MAC is configured and enabled via software.
3. The device is powered down. Software disables the 48 MHz Relaxation Oscillator and Ring Oscillator if enabled via the Clock Control Register (CLK_CTL).
4. After some time elapses, the device receives a PD message from the attached partner.
5. The PD MAC asynchronously detects preamble activity on the CC line and enables the 48 MHz Relaxation Oscillator.
6. The oscillator is operational in approximately 5 us, at which point the PD MAC is operational.
7. The PD MAC receives the remainder of the preamble and stores the message into the RX FIFO, and in accordance with the PD protocol, responds with GoodCRC as required.
8. An interrupt is issued via assertion of the **IRQ_N** pin.
9. Software services the interrupt via SPI, reads the PD message and responds as required.
10. The device is then powered down. Software disables the 48 MHz Relaxation Oscillator and Ring Oscillator via the Clock Control Register (CLK_CTL).
11. The device remains powered down until the next PD message is received.

6.5 Interrupt Assertion from STANDBY

When the device is in STANDBY, it is able to detect a number of events that may be configured to assert the **IRQ_N** pin upon being appropriately programmed via software. The logic detecting such events operates off of the 20 KHz Keep Alive Oscillator.

Upon the occurrence of an event, which is programmed to assert **IRQ_N**, the 48 MHz Relaxation Oscillator and Ring Oscillator are enabled. Upon synchronization, the **IRQ_N** pin shall assert.

After software services the source interrupt(s), it should disable the 48 MHz Relaxation Oscillator and Ring Oscillator via the Clock Control Register (CLK_CTL) to place the part back in STANDBY.

The following example sequence illustrates the steps for configuring the device to detect an OCS event on the **OCS_COMP1** pin while in STANDBY.

1. Software enables the OCS Compare Interrupt OCS_CMP_INT bit in the Interrupt Enable Register (INT_EN).
2. Software enables OCS detection, as defined in Section 7.3, "External Over-current Detection", to sample the **OCS_COMP1** pin.
3. Software disables the 48 MHz Relaxation Oscillator and 1 MHz Ring Oscillator via the Clock Control Register (CLK_CTL)
4. An OCS event occurs and is detected on **OCS_COMP1**.
5. The Ring Oscillator is enabled and is used as the device's operational clock.
6. The device enables the 48 MHz oscillator and waits about 5 us for the oscillator to stabilize.
7. The 48 MHz oscillator is stable.
8. After synchronization is complete, the **IRQ_N** pin is asserted.
9. Software detects **IRQ_N** assertion and services the interrupt.
10. Software disables the 48 MHz Relaxation Oscillator and Ring Oscillator via the Clock Control Register (CLK_CTL) to place the part back in STANDBY.

© 2024 Microchip Technology Inc. and its subsidiaries

6.6 Reset Operation

The following chip-level Resets are supported by the device:

- Power-On-Reset (POR)
- Pin Reset (**RESET_N**)
- Software Reset (SRESET in Hardware Control Register (HW_CTL))
- Watchdog Timer (WDT_STS)

Chip-level Resets trigger the sampling of the **CFG_SEL** configuration strap (see Section 8.9.1, "Configuration Selection," on page 63 for additional information). Chip-level Reset completion can be determined by assertion of the RDY_INT bit in the Interrupt Enable Register (INT_EN) and assertion of the **IRQ_N** pin.

The following is a summary of steps that occur after a chip-level Reset.

1. System level Reset event (POR, **RESET_N**, SRESET, WDT_STS) occurs.
2. The device enables the 20 KHz Keep Alive Oscillator, 48 MHz Relaxation Oscillator and 1MHz Ring Oscillator.
3. The device samples the **CFG_SEL** pin.
4. The device configures itself in accordance with the **CFG_SEL** pin and settings.
5. The device is enabled, the RDY_INT bit in the Interrupt Enable Register (INT_EN) asserts and the **IRQ_N** pin asserts.
6. The device disables the 48 MHz Relaxation Oscillator and the Ring Oscillator.

6.7 Clocks and Power Management Registers

This section details the clocks and power management registers. For an overview of the entire device register map, refer to Section 4.0, "Register Map," on page 13.

TABLE 6-1: CLOCKS AND POWER MANAGEMENT REGISTERS MAP

Address	Register Name (Symbol)
1000h	Clock Control Register (CLK_CTL)
1001h – 13FFh	Reserved for future expansion

Note: RESERVED address space must not be written under any circumstances. Failure to heed this warning may result in untoward operation and unexpected results.

6.7.1 CLOCK CONTROL REGISTER (CLK_CTL)

Address: 1000h Size: 8 bits

Bits	Description	Type	Default
7:3	**RESERVED**	RO	-
2	**Ring Oscillator Enable** 0: Oscillator is disabled. 1: Oscillator is enabled.	R/W	0b
1	**48 MHz Relaxation Oscillator Enable** 0: Oscillator is disabled. 1: Oscillator is enabled.	R/W	Note 6-1
0	**20 KHz Keep Alive Oscillator Enable** 0: Oscillator is disabled. 1: Oscillator is enabled.	R/W	1b

Note 6-1 This bit will always appear asserted when read by software as the 48 MHz Relaxation Oscillator must be enabled to facilitate SPI transactions.

© 2024 Microchip Technology Inc. and its subsidiaries

7.0 SYSTEM CONTROL

This section details the following system controls:

- System Interrupts
- General Purpose I/O
- External Over-current Detection
- System Control Registers

7.1 System Interrupts

The device provides an active-low and open drain interrupt pin, **IRQ_N**, which is asserted as a function of the System Control's Interrupt Status Register (INT_STS) Interrupt Status Register (INT_STS) and Interrupt Enable Register (INT_EN) Interrupt Enable Register (INT_EN). The following interrupts are supported:

- HPD Interrupt
- Power Switch Module Interrupt
- Watchdog Timer Assertion Interrupt
- Port Power Controller Interrupt
- Power Delivery MAC Interrupt
- OCS Comparator Interrupt
- PIO Override Interrupt
- PIO Interrupt
- CC Interrupt
- VBUS Interrupt
- Power Control Interrupt
- Device Ready Interrupt

In order to clear an interrupt status bit, the source of the asserted bit in Interrupt Status Register (INT_STS) must be cleared. This process typically involves dealing with the module (e.g. PD MAC, CC, Port Power Controller, Watchdog Timer, Power Switch, etc.) that triggered the interrupt or configuring the respective module's interrupt enable register to disable assertion.

The PIO interrupts are cleared by writing "1" to the asserted bit(s) in the PIO Interrupt Status Register (PIO_INT_STS). The PIO Override interrupts are cleared by writing '1' to the asserted bit(s) in the PIO Override Interrupt Status Register (PIO_OVR_INT_STS). The OCS interrupts are cleared by writing '1' to the asserted bit(s) in the OCS Comparator Change Status Register (OCS_CMP_CHG_STS).

Figure 7-1 illustrates the device's interrupt hierarchy. Figure 7-2 illustrates the generation of the CC Interrupt CC_INT bit in the Interrupt Status Register (INT_STS).

© 2024 Microchip Technology Inc. and its subsidiaries

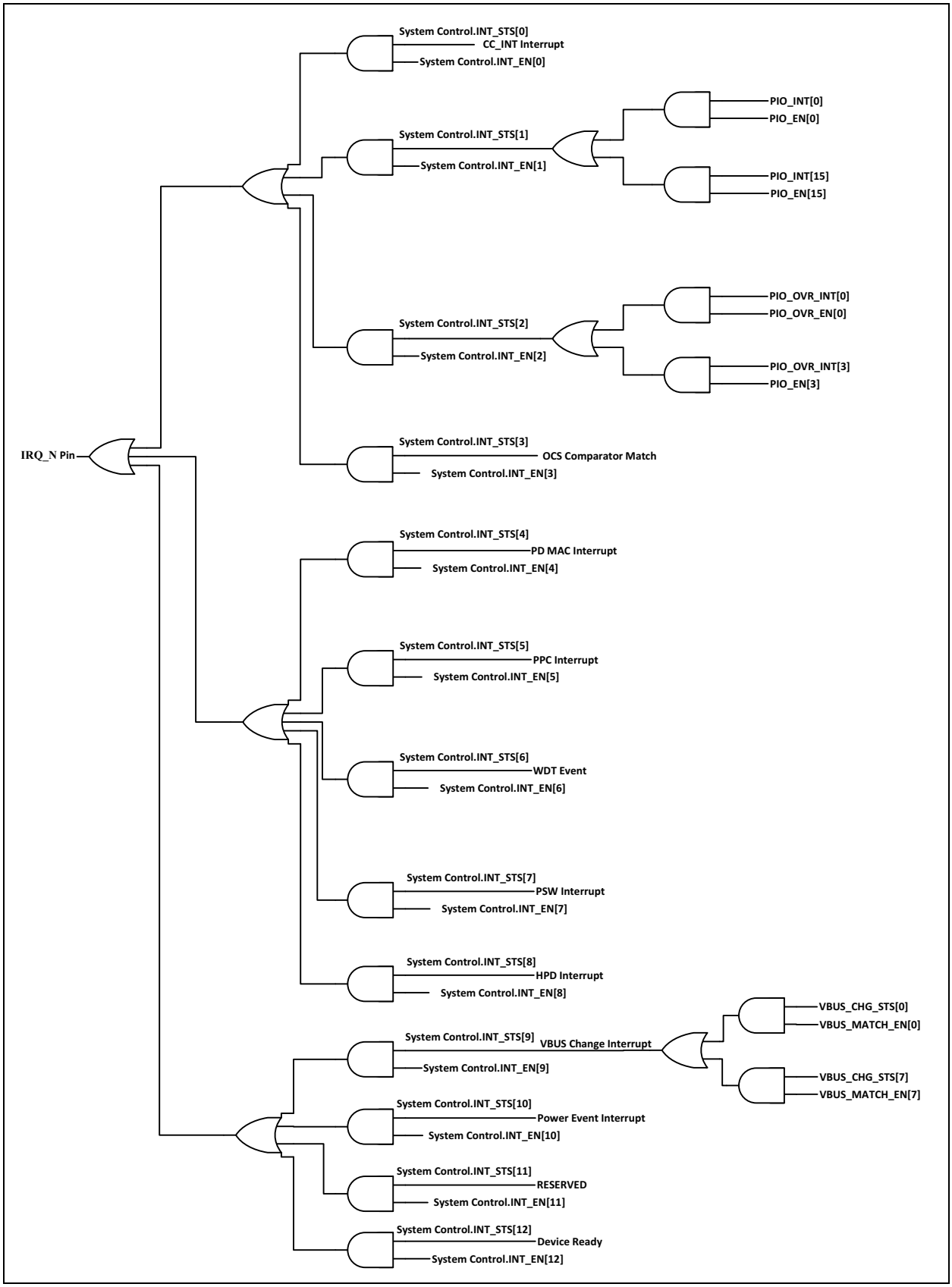

FIGURE 7-1: *System Interrupt Hierarchy.*

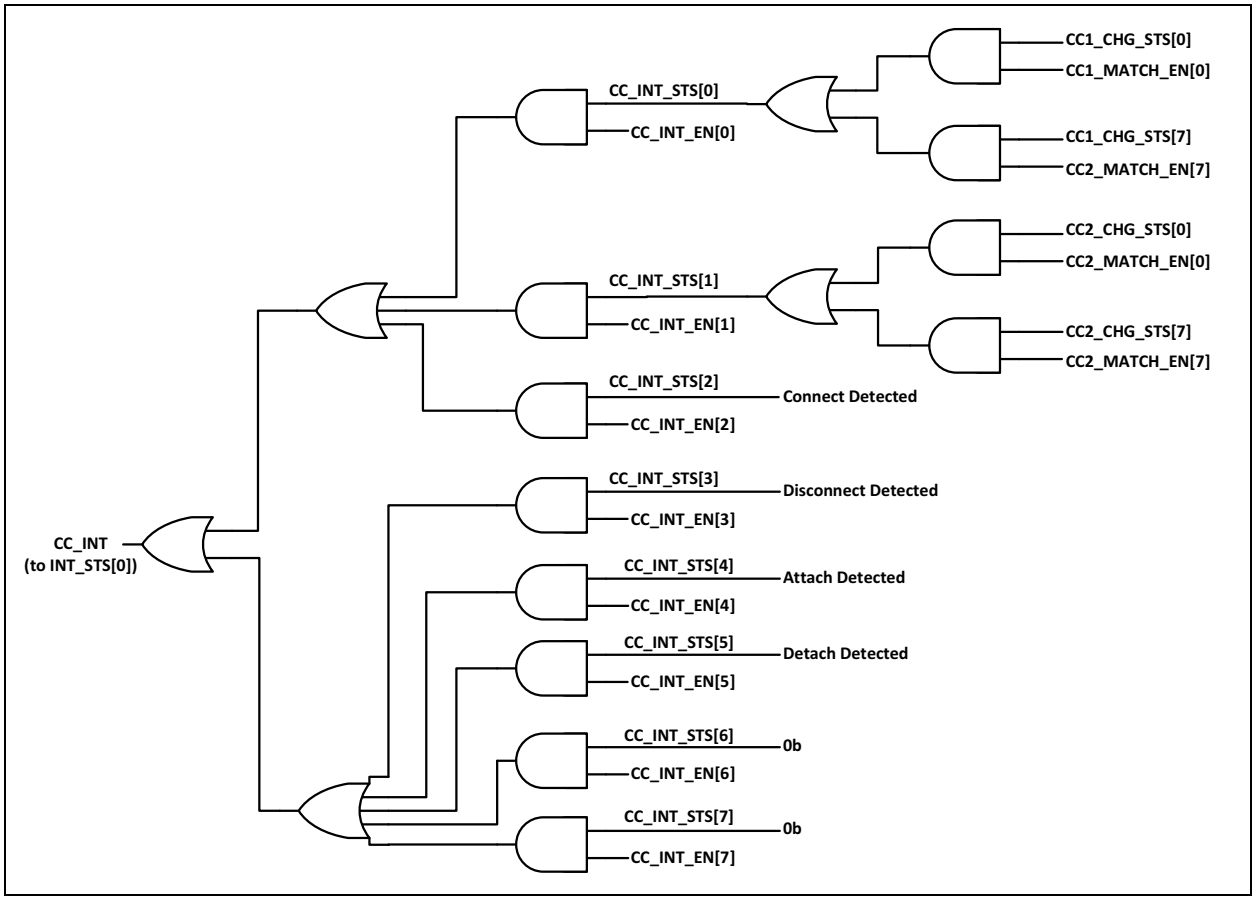

FIGURE 7-2: *CC_INT Interrupt Hierarchy.*

7.2 General Purpose I/O

A key function of the MCP22350 is to manage external devices via up to ten PIOs. Usually this is accomplished via host software programming of the PIOs.

In some cases, the MCP22350 must automatically override the PIO state in response to an error condition. Features have been incorporated into the design to enable such operation. This is required in cases where the latency introduced by reliance on software to affect the PIO state is either too long or not deterministic.

A PIO is configured via the respective Configure PIOx Registers (CFG_PIOx). A PIO may also be configured to assert PIO_INT in the Interrupt Status Register (INT_STS)**.** The state of a PIO is known by reading the PIO Status Register (PIO_STS).

A mechanism exists for multiple PIO outputs to be updated via a single register write. This is accomplished via the Configure PIO Output Register (CFG_PIO_OUT). Writes to this register that change the output value of a PIO are reflected in the DataOutput bit of the respective Configure PIOx Registers (CFG_PIOx). Likewise, writes to DataOutput in the Configure PIOx Registers (CFG_PIOx) will update the respective bit in the Configure PIO Output Register (CFG_PIO_OUT).

Note:	**GPIO0** and **GPIO1** are not available in the MCP22350.

7.2.1 PIO SIMULTANEOUS UPDATE

A mechanism has been incorporated to enable multiple PIOs to be updated simultaneously. This is desirable to simplify software and prevent devices controlled by the MCP22350 from entering an intermediary unknown state. Devices responsible for managing power would be of particular concern.

The Configure PIOx Registers (CFG_PIOx) CSR is updated by this function. When the simultaneous update request is accepted by hardware, the contents of the PIO registers are simultaneously updated.

The example below illustrates the simultaneous PIO update operation:

1. Software changes Configure PIOx Update Registers (CFG_PIOx_UPD) as required.
2. Software changes Configure PIO Output

© 2024 Microchip Technology Inc. and its subsidiaries

Update Register (CFG_PIO_OUT_UPD) as required.

Note: The Configure PIO Output Update Register (CFG_PIO_OUT_UPD) and Configure PIOx Update Registers (CFG_PIOx_UPD) must be programmed consistently by software. If the output value bits are different between the two registers, then the value in Configure PIOx Update Registers (CFG_PIOx_UPD) will be used for updating the Configure PIOx Registers (CFG_PIOx) and the respective bit in the Configure PIO Output Register (CFG_PIO_OUT).

3. Software sets the Configure PIOx Update Registers (CFG_PIOx_UPD) to initiate the update.
4. A pending PIO override blocks acceptance of the update request. Only after the pending PIO override function is cleared will the device clear PIO_UPD_REQ. The pending PIO override is cleared via the PIO Override Enable Register (PIO_OVR_EN).
5. After the update is accepted, PIO_UPD_REQ clears automatically.

APPLICATION NOTE: If a PIO override is pending, the PIO simultaneous update is blocked.

7.2.2 PIO OVERRIDE

7.2.2.1 Overview

A mechanism is defined in this section to enable the state of a PIO to be changed without software intervention. This provides a mechanism to instantaneously disable a power circuit, controlled by a MCP22350 PIO, based upon a change in the state of a selected PIO input, OCS detection or other event.

7.2.2.2 Description

Four override functions are included in the device. For each function, a PIO or other source must be selected for monitoring via the corresponding PIO Override x Source Select Registers (PIO_OVRx_SRC_SEL). The value to be monitored is set in the PIO Override Monitor Value Register (PIO_OVR_MON_VAL) and is compared with the state of the respective PIO. When these values match for an override, the enabled PIO outputs change their state accordingly.

PIO outputs controlled by an override are enabled by the PIO Override x Output Enable Registers (PIO_OVRx_OUT_EN). Each override has an instance in this register, and a PIO may be used across multiple overrides.

Firmware can be notified that an override was executed via assertion of PIO_OVERRIDE_INT in the Interrupt Status Register (INT_STS), if Interrupt Enable Register (INT_EN) is appropriately configured.

7.3 External Over-current Detection

The device incorporates an analog comparator DAC circuit to detect an over-current condition. This feature is supported via the **OCS_COMP1** and/or **OCS_COMP2** pin.

This feature is enabled as follows:

1. Software clears the OCS Comparator Control bit in the OCS Comparator Control Register (OCS_CMP_CTL) to determine the OCS debouncer.
2. Software polls OCS_DB_ACTIVE until it clears, which indicates the OCS debouncer is disabled.
3. If **OCS_COMP2** is desired, the shared PIO must be disabled via the Configure PIOx Registers (CFG_PIOx).
4. Software programs one or both of the OCS Comparator x Threshold Registers (OCS_CMPx_THR), as required.
5. Software programs the OCS Comparator Debounce Register (OCS_CMP_DEBOUNCE).
6. Software enables the **OCS_COMP*x*** pin(s) via the OCS Comparator Match Enable Register (OCS_CMP_MATCH_EN).
7. Software enables the respective interrupt in the Interrupt Enable Register (INT_EN).
8. Software sets the OCS Comparator Control bit in the OCS Comparator Control Register (OCS_CMP_CTL) to enable comparison on **OCS_COMP1** and/or **OCS_COMP2**, as desired.
9. Detection of an overcurrent event by the comparator results in the respective bit of the OCS Comparator Change Status Register (OCS_CMP_CHG_STS) and OCS_CMP_INT asserts. The **IRQ_N** pin will assert, if configured.
10. Software writes to the OCS Comparator Change Status Register (OCS_CMP_CHG_STS) to clear OCS_CMP_INT. For a low-to-high transition, the respective bit in the OCS Comparator Match Register (OCS_CMP_MATCH) is set, while for a high-to-low transition the bit is cleared.

This feature is disabled when software clears the OCS Comparator Control bit in the OCS Comparator Control Register (OCS_CMP_CTL). Either **OCS_COMP*x*** pin may be used to trigger a PIO override.

7.4 General Purpose Timer

The device incorporates a low-power general purpose timer that operates off a 20 kHz oscillator and implements a 16-bit one-shot down counter. When the

© 2024 Microchip Technology Inc. and its subsidiaries

timer underflows, it asserts the interrupt GP_UFLOW bit in General Purpose Timer Interrupt Source Register (GP_TIMER_INT_SRC) and stops counting. This causes the GP_TIMER_INT to assert in Interrupt Status Register (INT_STS). The interrupt persists until the GP_UFLOW bit is cleared. If the respective bit is set in Interrupt Enable Register (INT_EN), the **IRQ_N** pin will assert.

The timer's upper threshold is loaded via the General Purpose Timer Load Register (GP_TIMER_LOAD). Setting RESET in the General Purpose Timer Control Register (GP_TIMER_CTL) causes the timer's internal counter to be loaded to this value.

The timer is enabled by setting ENABLE in the General Purpose Timer Control Register (GP_TIMER_CTL). This causes the timer to decrement every 1 ms. The timer continues to decrement until it underflows or it is disabled.

Note:	The underflow condition is defined as when the down counter transitions from `0x0000` to `0xFFFF`.

Clearing the ENABLE bit in the General Purpose Timer Control Register (GP_TIMER_CTL) disables the timer and it stops counting.

The timer's current count can be read from General Purpose Timer Count Register (GP_TIMER_COUNT). The timer should be halted by clearing ENABLE before reading it. After the count is read, the ENABLE may be set again and the counter will resume.

The DIS_ON_UFLOW bit in the General Purpose Timer Control Register (GP_TIMER_CTL) causes the timer to automatically disable upon underflow detection and assert GP_UFLOW. In this case the assertion of GP_UFLOW is delayed until the timer is fully disabled in the 20 KHz clock domain.

APPLICATION NOTE: This timer enables clocking sources to be disabled in the host CPU, which is useful for timing events such as DRP. This helps provide for a lower total power system solution.

The following steps illustrate the usage model for DRP implementation:

1. Software configures the device as a DFP or UFP. See Section 8.4, "DRP Operation (Legacy)" for further details.
2. Software enables the GP_TIMER_INT in the Interrupt Enable Register (INT_EN).
3. Software programs the General Purpose Timer Load Register (GP_TIMER_LOAD) to a random value that complies with the range for the tDRP period as defined in the USB Type-C Specification.
4. Software sets the ENABLE, RESET and DIS_ON_UFLOW bits in the General Purpose Timer Control Register (GP_TIMER_CTL). This causes the value in the General Purpose Timer Load Register (GP_TIMER_LOAD) to be loaded into the timer and it begins decrementing. This also configures the timer to delay assertion of GP_UFLOW in the General Purpose Timer Interrupt Source Register (GP_TIMER_INT_SRC) until the timer is fully disabled (portion operated in 20 KHz domain).
5. Upon timer expiration, the GP_UFLOW bit will be set and the GP_TIMER_INT asserts in Interrupt Status Register (INT_STS).
6. The **IRQ_N** pin asserts.
7. Software services the IRQ and determines whether or not a connection has been established with a UFP or DFP. If no connection has been established, software changes the device's role. See Section 8.4, "DRP Operation (Legacy)" for further details.
8. Software programs the General Purpose Timer Load Register (GP_TIMER_LOAD) to a random value that complies with the range of the tDRP period as defined in the USB Type-C Specification.
9. Software shall clear the GP_UFLOW bit in the General Purpose Timer Interrupt Source Register (GP_TIMER_INT_SRC).
10. Software sets the ENABLE, RESET and DIS_ON_UFLOW bits in General Purpose Timer Control Register (GP_TIMER_CTL). This causes the value in General Purpose Timer Load Register (GP_TIMER_LOAD) to be loaded into the timer, and the timer begins decrementing.
11. Upon timer expiration and timer disablement, the GP_UFLOW bit will be set and the GP_TIMER_INT asserts in Interrupt Status Register (INT_STS).
12. The **IRQ_N** pin asserts.
13. Software services the IRQ and determines if a connection has been established with a UFP or DFP. If no connection has been established, SW changes the device's role. See Section 8.4, "DRP Operation (Legacy)" for further details.
14. Go to step 8.

© 2024 Microchip Technology Inc. and its subsidiaries

7.5 System Control Registers

This section details the system control registers. For an overview of the entire device register map, refer to Section 4.0, "Register Map," on page 13.

TABLE 7-1: SYSTEM CONTROL REGISTER MAP

Address	Register Name (Symbol)
0000h	Device ID Register (ID_REV)
0004h	USB Vendor ID Register (VID)
0006h	USB Product ID Register (PID)
0008h	USB PD Revision Register (PD_REV)
000Ah	USB Type-C® Revision Register (C_REV)
000Bh - 000Dh	Reserved for future expansion
000Eh	SPI Test Register (SPI_TEST)
0010h	Interrupt Status Register (INT_STS)
0014h	Interrupt Enable Register (INT_EN)
0018h	Hardware Control Register (HW_CTL)
001Ah - 001Fh	Reserved for future expansion
0020h	PIO Status Register (PIO_STS)
0022h	PIO Interrupt Status Register (PIO_INT_STS)
0024h	PIO Interrupt Enable Register (PIO_INT_EN)
0026h - 002Fh	Reserved for future expansion
0030h	Configure PIOx Registers (CFG_PIOx) x=0
0031h	Configure PIOx Registers (CFG_PIOx) x=1
0032h	Configure PIOx Registers (CFG_PIOx) x=2
0033h	Configure PIOx Registers (CFG_PIOx) x=3
0034h	Configure PIOx Registers (CFG_PIOx) x=4
0035h	Configure PIOx Registers (CFG_PIOx) x=5
0036h	Configure PIOx Registers (CFG_PIOx) x=6
0037h	Configure PIOx Registers (CFG_PIOx) x=7
0038h	Configure PIOx Registers (CFG_PIOx) x=8
0039h	Configure PIOx Registers (CFG_PIOx) x=9
003Ah	Configure PIOx Registers (CFG_PIOx) x=10
003Bh	Configure PIOx Registers (CFG_PIOx) x=11
003Ch	Configure PIOx Registers (CFG_PIOx) x=12
003Dh	Configure PIOx Registers (CFG_PIOx) x=13
003Eh	Configure PIOx Registers (CFG_PIOx) x=14
003Fh	Configure PIOx Registers (CFG_PIOx) x=15
0040h	Configure PIOx Update Registers (CFG_PIOx_UPD) x=0
0041h	Configure PIOx Update Registers (CFG_PIOx_UPD) x=1
0042h	Configure PIOx Update Registers (CFG_PIOx_UPD) x=2
0043h	Configure PIOx Update Registers (CFG_PIOx_UPD) x=3
0044h	Configure PIOx Update Registers (CFG_PIOx_UPD) x=4
0045h	Configure PIOx Update Registers (CFG_PIOx_UPD) x=5
0046h	Configure PIOx Update Registers (CFG_PIOx_UPD) x=6
0047h	Configure PIOx Update Registers (CFG_PIOx_UPD) x=7
0048h	Configure PIOx Update Registers (CFG_PIOx_UPD) x=8

© 2024 Microchip Technology Inc. and its subsidiaries

TABLE 7-1: SYSTEM CONTROL REGISTER MAP (CONTINUED)

Address	Register Name (Symbol)
0049h	Configure PIOx Update Registers (CFG_PIOx_UPD) x=9
004Ah	Configure PIOx Update Registers (CFG_PIOx_UPD) x=10
004Bh	Configure PIOx Update Registers (CFG_PIOx_UPD) x=11
004Ch	Configure PIOx Update Registers (CFG_PIOx_UPD) x=12
004Dh	Configure PIOx Update Registers (CFG_PIOx_UPD) x=13
004Eh	Configure PIOx Update Registers (CFG_PIOx_UPD) x=14
004Fh	Configure PIOx Update Registers (CFG_PIOx_UPD) x=15
0050h	PIO Override x Source Select Registers (PIO_OVRx_SRC_SEL) x=0
0051h	PIO Override x Source Select Registers (PIO_OVRx_SRC_SEL) x=1
0052h	PIO Override x Source Select Registers (PIO_OVRx_SRC_SEL) x=2
0053h	PIO Override x Source Select Registers (PIO_OVRx_SRC_SEL) x=3
0054h	PIO Override Monitor Value Register (PIO_OVR_MON_VAL)
0055h	PIO Override Enable Register (PIO_OVR_EN)
0056h	PIO Override Status Register (PIO_OVR_STS)
0057h	PIO Override Interrupt Status Register (PIO_OVR_INT_STS)
0058h	PIO Override Interrupt Enable Register (PIO_OVR_INT_EN)
0059h	Configure PIO Output Register (CFG_PIO_OUT)
005Bh	Configure PIO Output Update Register (CFG_PIO_OUT_UPD)
005Dh - 005Fh	Reserved for future expansion
0060h	PIO Override x Output Enable Registers (PIO_OVRx_OUT_EN) x=0
0062h	PIO Override x Output Enable Registers (PIO_OVRx_OUT_EN) x=1
0064h	PIO Override x Output Enable Registers (PIO_OVRx_OUT_EN) x=2
0066h	PIO Override x Output Enable Registers (PIO_OVRx_OUT_EN) x=3
0068h	PIO Override Output Register (PIO_OVR_OUT)
006Ah	PIO Override Direction Register (PIO_OVR_DIR)
006Ch	PIO Debounce Count Ten Millisecond Register (PIO_DEBOUNCE_10MS_COUNT)
006Dh	PIO Debounce Count One Millisecond Register (PIO_DEBOUNCE_1MS_COUNT)
006Eh	PIO Debounce Count One Microsecond Register (PIO_DEBOUNCE_1US_COUNT)
006Fh	PIO Debounce Status Register (PIO_DEBOUNCE_STS)
0070h	PIO Debounce Enable Register (PIO_DEBOUNCE_EN)
0074h – 007Fh	Reserved for future expansion
0080h	OCS Comparator Control Register (OCS_CMP_CTL)
0081h	OCS Comparator Match Register (OCS_CMP_MATCH)
0082h	OCS Comparator Change Status Register (OCS_CMP_CHG_STS)
0083h	OCS Comparator Match Enable Register (OCS_CMP_MATCH_EN)
0084h	OCS Comparator x Threshold Registers (OCS_CMPx_THR) x=1
0086h	OCS Comparator x Threshold Registers (OCS_CMPx_THR) x=2
0088h	OCS Comparator Debounce Register (OCS_CMP_DEBOUNCE)
0089h – 009Ah	Reserved for future expansion
009Bh	IRQ_N PU/PD Control Register (IRQ_PUPD)
009Ch	Voltage Regulator Control Register (VREG_CTL)
009D – 009Fh	Reserved for future expansion
00A0h	General Purpose Timer Load Register (GP_TIMER_LOAD)
00A2h	General Purpose Timer Interrupt Source Register (GP_TIMER_INT_SRC)

© 2024 Microchip Technology Inc. and its subsidiaries

TABLE 7-1: SYSTEM CONTROL REGISTER MAP (CONTINUED)

Address	Register Name (Symbol)
00A3h	General Purpose Timer Control Register (GP_TIMER_CTL)
00A4h	General Purpose Timer Count Register (GP_TIMER_COUNT)
00A6h – 03FFh	Reserved for future expansion

Note: RESERVED address space must not be written under any circumstances. Failure to heed this warning may result in untoward operation and unexpected results.

7.5.1 DEVICE ID REGISTER (ID_REV)

Address: 0000h Size: 32 bits

Bits	Description	Type	Default
31:16	**Device ID (ID)**	RO	Note 7-1
15:0	**Device Revision (REV)**	RO	Note 7-2

Note 7-1 The default value of this field is dependent on the version of the device.
MCP22350-2: 0351h
MCP22350-1: 0353h

Note 7-2 The default value of this field is dependent on the silicon revision of the device.

ID_REV[7:0] = 00h
ID_REV[15:8] = 01h
ID_REV[23:16] = 02h
ID_REV[31:24] = 03h

7.5.2 USB VENDOR ID REGISTER (VID)

Address: 0004h Size: 16 bits

Bits	Description	Type	Default
15:0	**USB Vendor Identification (VID)**	R/W	0424h

VID[7:0] = 04h

VID[15:8] = 05h

7.5.3 USB PRODUCT ID REGISTER (PID)

Address: 0006h Size: 16 bits

Bits	Description	Type	Default
15:0	**USB Product Identification (PID)**	R/W	0350h

PID[7:0] = 06h

PID[15:8] = 07h

© 2024 Microchip Technology Inc. and its subsidiaries

7.5.4 USB PD REVISION REGISTER (PD_REV)

Address: 0008h Size: 16 bits

Bits	Description	Type	Default
15:0	**USB Power Delivery Specification Revision (PD_REV)**	R/W	Note 7-3

Note 7-3 The default value of this field is loaded from the respective OTP field. If OTP is not valid, the default value is 3010h.

PD_REV[7:0] = 08h

PD_REV[15:8] = 09h

7.5.5 USB TYPE-C® REVISION REGISTER (C_REV)

Address: 000Ah Size: 16 bits

Bits	Description	Type	Default
15:0	**USB Type-C® Specification Revision (C_REV)**	R/W	Note 7-4

Note 7-4 The default value of this field is loaded from the respective OTP field. If OTP is not valid, the default value is 12h.

C_REV[7:0] = 0Ah

C_REV[15:8] = 0Bh

7.5.6 SPI TEST REGISTER (SPI_TEST)

Address: 000Eh Size: 8 bits

.

Bits	Description	Type	Default
7:0	**SPI Test (SPI_TEST)** This register is used by the host to determine when the chip has come out of power-down when waking it via the SPI interface.	RO	02h

© 2024 Microchip Technology Inc. and its subsidiaries

7.5.7 INTERRUPT STATUS REGISTER (INT_STS)

Address: 0010h Size: 16 bits

Bits	Description	Type	Default
15	**RESERVED**	RO	0h
14	**GP_TIMER_INT** Interrupt generated when the general purpose timer underflows. This interrupt reflects the value of the GP_UFLOW bit of the General Purpose Timer Interrupt Source Register (GP_TIMER_INT_SRC).	RO	0b
13	**RESERVED**	RO	0b
12	**RDY_INT** Interrupt generated when the device is configured and ready for access by host CPU after a system level Reset event. This interrupt reflects the value of the DEV_READY bit of the Hardware Control Register (HW_CTL).	RO	0b
11	**EXT_INT** Interrupt generated by the Cable Plug Orientation and Detection module.	RO	0b
10	**PWR_INT** Interrupt generated power event. This interrupt is cleared via the Power Interrupt Status Register (PWR_INT_STS).	RO	0b
9	**VBUS_INT** Indicates that a change occurred in the state of the VBUS Change Status Register (VBUS_CHG_STS).	RO	0b
8	**HPD_INT** Interrupt generated by the HPD detection logic. This interrupt is cleared via the HPD Interrupt Status Register (HPD_INT_STS).	RO	0b
7	**PSW_INT** Interrupt generated by the power switch. This interrupt is cleared via the Power Switch Interrupt Status Register (PWR_INT_STS).	RO	0b
6	**WDT_INT** Interrupt generated by Watchdog Timer expiration. This interrupt is cleared via the WDT_STS bit in the Watchdog Control Register (WDT_CTL). **Note:** When a Watchdog interrupt is pending, all write operations are blocked until the WDT_STS bit in the Watchdog Control Register (WDT_CTL) is cleared.	RO	0b
5	**PPC_INT** Interrupt generated by PPC.	RO	0b

© 2024 Microchip Technology Inc. and its subsidiaries

Bits	Description	Type	Default
4	**MAC_INT** Interrupt generated by the PD MAC. This interrupt is cleared via the corresponding PD MAC interrupt register, as detailed in Section 10.4.2.23, "PD MAC Interrupt Status and Enable Registers," on page 133.	RO	0b
3	**OCS_CMP_INT** Interrupt generated from the detection of an over-current condition. This interrupt is cleared via the OCS Comparator Change Status Register (OCS_CMP_CHG_STS).	RO	0b
2	**PIO_OVERRIDE_INT** Interrupt generated from a PIO override. This interrupt is cleared via the PIO Override Interrupt Status Register (PIO_OVR_INT_STS).	RO	0b
1	**PIO_INT** Interrupt generated from configured PIO status change. This interrupt is cleared via the PIO Interrupt Status Register (PIO_INT_STS).	RO	0b
0	**CC_INT** Interrupt generated by the Cable Plug Orientation and Detection module. This interrupt is cleared via the CC Interrupt Status Register (CC_INT_STS).	RO	0b

INT_STS[7:0] = 10h

INT_STS[15:8] = 11h

7.5.8 INTERRUPT ENABLE REGISTER (INT_EN)

Address: 0014h Size: 16 bits

Bits	Description	Type	Default
15	**RESERVED**	RO	0h
14	**Interrupt Enable 13** When “0”, prevents generation of the respective interrupt.	R/W	0b
13	**RESERVED**	RO	-
12	**Interrupt Enable 12** When “0”, prevents generation of the respective interrupt.	R/W	1b
11	**Interrupt Enable 11** When “0”, prevents generation of the respective interrupt.	R/W	0b
10	**Interrupt Enable 10** When “0”, prevents generation of the respective interrupt.	R/W	0b
9	**Interrupt Enable 9** When “0”, prevents generation of the respective interrupt.	R/W	0b
8	**Interrupt Enable 8** When “0”, prevents generation of the respective interrupt.	R/W	0b
7	**Interrupt Enable 7** When “0”, prevents generation of the respective interrupt.	R/W	0b

© 2024 Microchip Technology Inc. and its subsidiaries

Bits	Description	Type	Default
6	**Interrupt Enable 6** When “0”, prevents generation of the respective interrupt.	R/W	1b
5	**Interrupt Enable 5** When “0”, prevents generation of the respective interrupt.	R/W	0b
4	**Interrupt Enable 4** When “0”, prevents generation of the respective interrupt.	R/W	0b
3	**Interrupt Enable 3** When “0”, prevents generation of the respective interrupt.	R/W	0b
2	**Interrupt Enable 2** When “0”, prevents generation of the respective interrupt.	R/W	0b
1	**Interrupt Enable 1** When “0”, prevents generation of the respective interrupt.	R/W	0b
0	**Interrupt Enable 0** When “0”, prevents generation of the respective interrupt.	R/W	0b

INT_EN[7:0] = 12h

INT_EN[15:8] = 13h

The default value is loaded from RESET_MASK OTP field.

7.5.9 HARDWARE CONTROL REGISTER (HW_CTL)

Address: 0018h Size: 16 bits

Bits	Description	Type	Default
15:3	**RESERVED**	RO	-
2	**DEV_READY** When set, this bit indicates that the device has been fully configured after a system level Reset event.	R/SC	0b
1	**PIO_UPD_REQ** When this bit is set, the PIO registers are updated from the respective simultaneous update registers. After the operation completes, this bit is automatically cleared. The request will not be accepted if an override function is pending. After the override condition is cleared by software, the update request will be accepted. The override is cleared via the respective bit of PIO Override Enable Register (PIO_OVR_EN).	R/SC	0b
0	**SRESET** Software Reset. When set, this bit initiates a chip level Reset.	SC	0b

© 2024 Microchip Technology Inc. and its subsidiaries

7.5.10 PIO STATUS REGISTER (PIO_STS)

Address: 0020h Size: 16 bits

Bits	Description	Type	Default
15	**PIO15** 0b: PIO is low 1b: PIO is high	RO	0b
14	**PIO14** 0b: PIO is low 1b: PIO is high	RO	0b
13	**PIO13** 0b: PIO is low 1b: PIO is high	RO	0b
12	**PIO12** 0b: PIO is low 1b: PIO is high	RO	0b
11	**PIO11** 0b: PIO is low 1b: PIO is high	RO	0b
10	**PIO10** 0b: PIO is low 1b: PIO is high	RO	0b
9	**PIO9** 0b: PIO is low 1b: PIO is high	RO	0b
8	**PIO8** 0b: PIO is low 1b: PIO is high	RO	0b
7	**PIO7** 0b: PIO is low 1b: PIO is high	RO	0b
6	**PIO6** 0b: PIO is low 1b: PIO is high	RO	0b
5	**PIO5** 0b: PIO is low 1b: PIO is high	RO	0b
4	**PIO4** 0b: PIO is low 1b: PIO is high	RO	0b
3	**PIO3** 0b: PIO is low 1b: PIO is high	RO	0b
2	**PIO2** 0b: PIO is low 1b: PIO is high	RO	0b
1	**PIO1** 0b: PIO is low 1b: PIO is high	RO	0b
0	**PIO0** 0b: PIO is low 1b: PIO is high	RO	0b

Note: GPIO0, GPIO1, GPIO10 - GPIO15 are not present on MCP22350, so these registers have no effect or direct use case.

PIO_STS[0] = 20h

PIO_STS[1] = 21h

© 2024 Microchip Technology Inc. and its subsidiaries

7.5.11 PIO INTERRUPT STATUS REGISTER (PIO_INT_STS)

Address: 0022h Size: 16 bits

Bits	Description	Type	Default
15:0	**PIO_INT[15:0]** When set, a level change has occurred on PIO[15:0]. Interrupts are cleared by writing a '1' to the bit.	R/WC	0000h

Note:	Writing a "1" (one) to a bit clears the bit and enables the detection of the next level transition. If not disabled by the corresponding bit in the PIO_EN register, "1" in any bit in this register will force assertion of PIO_INT interrupt.

7.5.12 PIO INTERRUPT ENABLE REGISTER (PIO_INT_EN)

Address: 0024h Size: 16 bits

Bits	Description	Type	Default
15:0	**PIO_EN[15:0]** When set, an interrupt can be generated on a state change from the corresponding PIO line.	R/W	0h

7.5.13 CONFIGURE PIOX REGISTERS (CFG_PIO*X*)

Address: x=0: 0030h Size: 8 bits
x=1: 0031h
x=2: 0032h
x=3: 0033h
x=4: 0034h
x=5: 0035h
x=6: 0036h
x=7: 0037h
x=8: 0038h
x=9: 0039h
x=10: 003Ah
x=11: 003Bh
x=12: 003Ch
x=13: 003Dh
x=14: 003Eh
x=15: 003Fh

Bits	Description	Type	Default
7	**PullUpEnable** 0b: No pull-up 1b: Pull-up enabled.	R/W	0b

© 2024 Microchip Technology Inc. and its subsidiaries

Bits	Description	Type	Default
6	**PullDownEnable** 0b: No pull-down 1b: Pull-down enabled.	R/W	0b
5	**FallingAlert** 0b: No alert on falling edge 1b: Assert PIO_INT on falling edge	R/W	0b
4	**RisingAlert** 0b: No alert on rising edge 1b: Assert PIO_INT on rising edge	R/W	0b
3	**DataOutput** 0b: Inactive (low for push-pull or open-drain) 1b: Active (high for push-pull, high-z for open-drain) **Note:** The input buffer status can be determined from the respective bit in PIO Status Register (PIO_STS). **Note:** The associated PIO output bit in the Configure PIO Output Register (CFG_PIO_OUT) will be updated to match the value written to this bit.	R/W	0b
2	**Buffer Type** When set, the output buffer for the corresponding GPIO signal is configured as a push/pull driver. When cleared, the corresponding GPIO signal is configured as an open-drain driver.	R/W	0b
1	**Direction** 0b: Input 1b: Output	R/W	0b
0	**Enable** 0b: GPIO Disabled 1b: GPIO Enabled **Note:** When a GPIO is disabled, the default function, if any, will be functional. All GPIOs default to being enabled and configured as inputs.	R/W	1b

Note: **GPIO0, GPIO1** is not available in the MCP22350.

7.5.14 CONFIGURE PIOX UPDATE REGISTERS (CFG_PIO*X*_UPD)

Address: x=0: 0040h, x=1: 0041h, x=2: 0042h, x=3: 0043h, x=4: 0044h, x=5: 0045h, x=6: 0046h, x=7: 0047h, x=8: 0048h, x=9: 0049h, x=10: 004Ah, x=11: 004Bh, x=12: 004Ch, x=13: 004Dh, x=14: 004Eh, x=15: 004Fh

Size: 8 bits

© 2024 Microchip Technology Inc. and its subsidiaries

Bits	Description	Type	Default
7	**PullUpEnabled**	R/W	0b
6	**PullDownEnabled**	R/W	0b
5	**FallingAlert**	R/W	0b
4	**RisingAlert**	R/W	0b
3	**OutputValue**	R/W	0b
2	**BufferType**	R/W	0b
1	**Direction**	R/W	0b
0	**Enable**	R/W	0b

Note: **GPIO0**, **GPIO1** is not available in the MCP22350.

7.5.15 PIO OVERRIDE *X* SOURCE SELECT REGISTERS (PIO_OVR*X*_SRC_SEL)

Address: x=0: 0050h, x=1: 0051h, x=2: 0052h, x=3: 0053h — Size: 8 bits

Bits	Description	Type	Default
7:5	**VBUS Threshold Select** This field selects which VBUS threshold shall be matched when selecting VBUS_DET for override. 000b: VSAFE0V_THR_MATCH 001b: VBUS0_THR_MATCH 010b: VBUS1_THR_MATCH 011b: VBUS2_THR_MATCH 1xxb: VBUS3_THR_MATCH	R/W	0h
4:0	**Override Select** This field selects the source for the respective PIO override. 0h: PIO0 1h: PIO1 2h: PIO2/OCS_COMP2 3h: PIO3 4h: PIO4 5h: PIO5 6h: PIO6 7h: PIO7 8h: PIO8 9h: PIO9 Ah: PIO10 Bh: PIO11 Ch: PIO12 Dh: PIO13 Eh: PIO14 Fh: PIO15 10h: OCS_COMP1 11h: VBUS_DET 12h-1Fh: Reserved	R/W	0h

Note: GPIO0, GPIO1, GPIO10 – GPIO15 are not present on MCP22350, so selections of 0h,1h, Ah – Fh are not valid and will not take any effect.

© 2024 Microchip Technology Inc. and its subsidiaries

7.5.16 PIO OVERRIDE MONITOR VALUE REGISTER (PIO_OVR_MON_VAL)

Address: 0054h Size: 8 bits

Bits	Description	Type	Default
7:4	**RESERVED**	RO	-
3	**PIO_MON_VAL3** Override function 3 monitors for this value on the selected PIO.	R/W	0b
2	**PIO_MON_VAL2** Override function 2 monitors for this value on the selected PIO.	R/W	0b
1	**PIO_MON_VAL1** Override function 1 monitors for this value on the selected PIO.	R/W	0b
0	**PIO_MON_VAL0** Override function 0 monitors for this value on the selected PIO.	R/W	0b

Note: When the PIO is mapped to an OCS comparator or VBUS comparator, the monitored case is rising above/ falling below the associated threshold. Setting the override monitor value indicates that the source exceeding the threshold is monitored. If the value is cleared then being below the threshold is monitored.

7.5.17 PIO OVERRIDE ENABLE REGISTER (PIO_OVR_EN)

Address: 0055h Size: 8 bits

Bits	Description	Type	Default
7:4	**RESERVED**	RO	-
3	**PIO_OVR_EN3** When set PIO Override 3 is enabled.	R/W	0b
2	**PIO_OVR_EN2** When set PIO Override 2 is enabled.	R/W	0b
1	**PIO_OVR_EN1** When set PIO Override 1 is enabled.	R/W	0b
0	**PIO_OVR_EN0** When set PIO Override 0 is enabled.	R/W	0b

© 2024 Microchip Technology Inc. and its subsidiaries

7.5.18 PIO OVERRIDE STATUS REGISTER (PIO_OVR_STS)

Address: 0056h Size: 8 bits

Bits	Description	Type	Default
7:4	**RESERVED**	RO	-
3	**PIO_OVR_STS3** Override function is active on the selected PIO. Set on a match to PIO_MON_VAL3 and clears on override feature disable PIO_OVR_EN3 =0.	RO	0b
2	**PIO_OVR_STS2** Override function is active on the selected PIO. Set on a match to PIO_MON_VAL2 and clears on override feature disable PIO_OVR_EN2 =0.	RO	0b
1	**PIO_OVR_STS1** Override function is active on the selected PIO. Set on a match to PIO_MON_VAL1 and clears on override feature disable PIO_OVR_EN1 =0.	RO	0b
0	**PIO_OVR_STS0** Override function is active on the selected PIO. Set on a match to PIO_MON_VAL0 and clears on override feature disable PIO_OVR_EN0 =0.	RO	0b

7.5.19 PIO OVERRIDE INTERRUPT STATUS REGISTER (PIO_OVR_INT_STS)

Address: 0057h Size: 8 bits

Bits	Description	Type	Default
7:4	**RESERVED**	RO	-
3	**PIO_OVR_INTR3** This interrupt is set when override function 3 detects the programmed monitored value on the selected PIO. The interrupt persists until cleared. In the case of Fast Role Swap, after being cleared by FW, this bit will not be set again by HW until the FRS Detect Enable (FRS_DET_EN) is cleared. This is irrespective of the reception of additional FRS signaling.	R/WC	0b
2	**PIO_OVR_INTR2** This interrupt is set when override function 2 detects the programmed monitored value on the selected PIO. The interrupt persists until cleared.	R/WC	0b

© 2024 Microchip Technology Inc. and its subsidiaries

Bits	Description	Type	Default
1	**PIO_OVR_INTR1** This interrupt is set when override function 1 detects the programmed monitored value on the selected PIO. The interrupt persists until cleared.	R/WC	0b
0	**PIO_OVR_INTR0** This interrupt is set when override function 0 detects the programmed monitored value on the selected PIO. The interrupt persists until cleared.	R/WC	0b

7.5.20 PIO OVERRIDE INTERRUPT ENABLE REGISTER (PIO_OVR_INT_EN)

Address: 0058h Size: 8 bits

Bits	Description	Type	Default
7:4	**RESERVED**	RO	0h
3	**PIO_OVR_INTR3** When ‘1’, enables the generation of this interrupt.	R/W	0b
2	**PIO_OVR_INTR2** When ‘1’, enables the generation of this interrupt.	R/W	0b
1	**PIO_OVR_INTR1** When ‘1’, enables the generation of this interrupt.	R/W	0b
0	**PIO_OVR_INTR0** When ‘1’, enables the generation of this interrupt.	R/W	0b

7.5.21 CONFIGURE PIO OUTPUT REGISTER (CFG_PIO_OUT)

Address: 0059h Size: 16 bits

This register enables multiple PIO output values to be updated in a single CSR write.

Bits	Description	Type	Default
15:0	**CFG_PIO_OUT** When this register is written, the output values for the respective PIOs are updated. Specifically, the DataOutput in the respective CFG_PIOx registers are updated. This register is not updated until the byte located at 005Ah is written by software. This is to prevent placing externally driven components in an invalid state while updating.	R/W	0000h

© 2024 Microchip Technology Inc. and its subsidiaries

7.5.22 CONFIGURE PIO OUTPUT UPDATE REGISTER (CFG_PIO_OUT_UPD)

Address: 005Bh Size: 16 bits

Bits	Description	Type	Default
15:0	**CFG_PIO_OUTx_UPD**	R/W	0000h

7.5.23 PIO OVERRIDE *X* OUTPUT ENABLE REGISTERS (PIO_OVR*X*_OUT_EN)

Address: x=0: 0060h
x=1: 0062h
x=2: 0064h
x=3: 0066h
Size: 16 bits

Bits	Description	Type	Default
15:0	**PIO_OVR_OUT_EN_X** Each of the overrides has an instance of this CSR to indicate which PIO outputs are controlled by it. When asserted, associated PIO output's state is controlled by the respective override function. **Note:** The same PIO output can be enabled by multiple overrides.	R/W	0h

7.5.24 PIO OVERRIDE OUTPUT REGISTER (PIO_OVR_OUT)

Address: 0068h Size: 16 bits

Bits	Description	Type	Default
15:0	**PIO Override Output** This field defines the PIO output value to be used when the respective PIO is enabled for override and the associated override is triggered.	R/W	0h

7.5.25 PIO OVERRIDE DIRECTION REGISTER (PIO_OVR_DIR)

Address: 006Ah Size: 16 bits

Bits	Description	Type	Default
15:0	**PIO Override Direction** This field defines the PIO direction value to be used when the respective PIO is enabled for override and the associated override is triggered.	R/W	0h

© 2024 Microchip Technology Inc. and its subsidiaries

7.5.26 PIO DEBOUNCE COUNT TEN MILLISECOND REGISTER (PIO_DEBOUNCE_10MS_COUNT)

Address: 006Ch Size: 8 bits

Bits	Description	Type	Default
7:0	**PIO_DEBOUNCE_10MS_COUNT** This register holds the 10 ms debounce counter. Any transition within the debounce period is suppressed. Each count corresponds to 10 ms, with the default value being 100 ms. This register is used when the debounce granularity is 10 ms. **Note:** The actual count may be either count or count-1.	R/W	0Ah

7.5.27 PIO DEBOUNCE COUNT ONE MILLISECOND REGISTER (PIO_DEBOUNCE_1MS_COUNT)

Address: 006Dh Size: 8 bits

Bits	Description	Type	Default
7:0	**PIO_DEBOUNCE_1MS_COUNT** This register holds the 1 ms debounce counter. Any transition within the debounce period is suppressed. Each count corresponds to 1 ms, with the default value being 10 ms. This register is used when the debounce granularity is 1 ms. **Note:** The actual count may be either count or count-1.	R/W	0Ah

7.5.28 PIO DEBOUNCE COUNT ONE MICROSECOND REGISTER (PIO_DEBOUNCE_1US_COUNT)

Address: 006Eh Size: 8 bits

Bits	Description	Type	Default
7:0	**PIO_DEBOUNCE_1US_COUNT** This register holds the 1 us debounce counter. Any transition within the debounce period is suppressed. Each count corresponds to 1 us, with the default value being 10 us. This register is used when the debounce granularity is 1 us. **Note:** The actual count may be either count or count-1.	R/W	0Ah

© 2024 Microchip Technology Inc. and its subsidiaries

7.5.29 PIO DEBOUNCE STATUS REGISTER (PIO_DEBOUNCE_STS)

Address: 006Fh Size: 8 bits

Bits	Description	Type	Default
7:1	**RESERVED**	RO	0h
0	**PIO_DB_ACT** PIO Debounce Active This bit is used to indicate that a PIO debounce is in process. 1b: PIO debounce pending 0b: PIO not pending	RO	0b

7.5.30 PIO DEBOUNCE ENABLE REGISTER (PIO_DEBOUNCE_EN)

Address: 0070h Size: 32 bits

This register enables a PIO for debouncing and selects the debouncer to be used as defined below:

- 00b: Debounce disabled
- 01b: Debounce Enabled (PIO Debounce Count One Microsecond Register (PIO_DEBOUNCE_1US_COUNT))
- 10b: Debounce Enabled (PIO Debounce Count One Millisecond Register (PIO_DEBOUNCE_1MS_COUNT))
- 11b: Debounce Enabled (PIO Debounce Count Ten Millisecond Register (PIO_DEBOUNCE_10MS_COUNT))

Bits	Description	Type	Default
31:30	**PIO_DB_EN15**	R/W	00b
29:28	**PIO_DB_EN14**	R/W	00b
27:26	**PIO_DB_EN13**	R/W	00b
25:24	**PIO_DB_EN12**	R/W	00b
23:22	**PIO_DB_EN11**	R/W	00b
21:20	**PIO_DB_EN10**	R/W	00b
19:18	**PIO_DB_EN9**	R/W	00b
17:16	**PIO_DB_EN8**	R/W	00b
15:14	**PIO_DB_EN7**	R/W	00b
13:12	**PIO_DB_EN6**	R/W	00b
11:10	**PIO_DB_EN5**	R/W	00b
9:8	**PIO_DB_EN4**	R/W	00b
7:6	**PIO_DB_EN3**	R/W	00b

© 2024 Microchip Technology Inc. and its subsidiaries

Bits	Description	Type	Default
5:4	**PIO_DB_EN2**	R/W	00b
3:2	**PIO_DB_EN1**	R/W	00b
1:0	**PIO_DB_EN0**	R/W	00b

Note: **GPIO0** is not available in the XXXXXX/XXXXX.

7.5.31 OCS COMPARATOR CONTROL REGISTER (OCS_CMP_CTL)

Address: 0080h Size: 8 bits

Bits	Description	Type	Default
7	**OCS_DB_ACTIVE** When this bit reads back 0b, the debouncer is disabled. The OCS debouncer is enabled when it reads back 1b.	RO	0b
6:2	**RESERVED**	RO	0h
1:0	**OCS Comparator Control** 00b: OCS Comparator and DAC are powered down 01b: OCS Comparator samples **OCS_COMP1** 10b: OCS Comparator samples **OCS_COMP2** 11b: OCS Comparator samples **OCS_COMP1** and **OCS_COMP2** When set to 01b or 10b, a sample is taken every 100 us. When set to 11b, each **OCS_COMPx** pin is effectively sampled every 200 us.	R/W	00b

7.5.32 OCS COMPARATOR MATCH REGISTER (OCS_CMP_MATCH)

Address: 0081h Size: 8 bits

This bit is always cleared when OCS Comparator Control is not enabled for the respective OCS_COMP pin.

Bits	Description	Type	Default
7:2	**RESERVED**	RO	0h
1	**OCS Comparator Match 2** When set, this bit indicates that a match has occurred and an OCS condition has been detected on **OCS_COMP2** pin.	RO	0b
0	**OCS Comparator Match 1** When set, this bit indicates that a match has occurred and an OCS condition has been detected on **OCS_COMP1** pin.	RO	0b

© 2024 Microchip Technology Inc. and its subsidiaries

7.5.33 OCS COMPARATOR CHANGE STATUS REGISTER (OCS_CMP_CHG_STS)

Address: 0082h Size: 8 bits

Bits	Description	Type	Default
7:6	**OCSx Match Valid (OCSx_MATCH_VLD)** Asserts after the OCS debouncer is first enabled, via OCS Comparator Control, and the first match becomes valid in OCS Comparator Match Register (OCS_CMP_MATCH). Bit 7 = OCS*2*_MATCH_VLD Bit 6 = OCS*1*_MATCH_VLD	R/WC	0b
5:2	**RESERVED**	RO	0h
1:0	**OCSx Change Status (OCSx_CHG_STS)** When set, each bit indicates that the respective bit in OCS Comparator Match Register (OCS_CMP_MATCH) has changed. Bit 1 = OCS*2*_CHG_STS Bit 0 = OCS*1*_CHG_STS A write of 1b clears the respective status bit.	R/WC	00b

7.5.34 OCS COMPARATOR MATCH ENABLE REGISTER (OCS_CMP_MATCH_EN)

Address: 0083h Size: 8 bits

Bits	Description	Type	Default
7:6	**OCSx Match Valid Enable (OCSx_MATCH_VLD_EN)** When set, the corresponding bit in OCS Comparator Change Status Register (OCS_CMP_CHG_STS) can cause the assertion of the OCS_CMP_INT interrupt. Bit 7 = OCS*2*_MATCH_VLD_EN Bit 6 = OCS*1*_MATCH_VLD_EN	R/W	0b
5:2	**RESERVED**	RO	0h
1:0	**OCSx Comparator Match Enable (OCSx_CMP_MATCH_EN)** When set, the corresponding bit in OCS Comparator Change Status Register (OCS_CMP_CHG_STS) can cause the assertion of the OCS_CMP_INT interrupt. Bit 1 = OCS*2*_CMP_MATCH_EN Bit 0 = OCS*1*_CMP_MATCH_EN	R/W	00b

© 2024 Microchip Technology Inc. and its subsidiaries

7.5.35 OCS COMPARATOR *X* THRESHOLD REGISTERS (OCS_CMP*X*_THR)

Address: x=1: 0084h x=2: 0086h Size: 16 bits

Bits	Description	Type	Default
15:10	**RESERVED**	RO	0h
9:0	**OCS Comparator Threshold** The lower byte of the threshold must be written before the upper byte. The entire 10-bit threshold is updated when the second write occurs. This has units of ~2.5V/1024. **Note:** This register shall not be modified while the OCS debouncer is enabled.	R/W	0h

APPLICATION NOTE: The firmware may dynamically write to this register while the OCS comparator is enabled, as long as the rules for updating defined in the register description are followed.

7.5.36 OCS COMPARATOR DEBOUNCE REGISTER (OCS_CMP_DEBOUNCE)

Address: 0088h Size: 8 bits

Bits	Description	Type	Default
7:0	**OCS_CMP_DEBOUNCE** Indicates the period of time for which the **OCS_COMP1** and **OCS_COMP2** inputs are debounced. This field has units of 100 us. **Note:** This register shall not be modified while the OCS debouncer is enabled.	R/W	0Fh

7.5.37 IRQ_N PU/PD CONTROL REGISTER (IRQ_PUPD)

Address: 009Bh Size: 8 bits

This register controls the PU and PU for the **IRQ_N** pin.

Bits	Description	Type	Default
7	**PullUpEnable** 0: No pull-up 1: Pull-up enabled.	R/W	0b
6	**PullDownEnable** 0: No pull-down 1: Pull-down enabled.	R/W	0b
5:0	**RESERVED**	RO	-

© 2024 Microchip Technology Inc. and its subsidiaries

7.5.38 VOLTAGE REGULATOR CONTROL REGISTER (VREG_CTL)

Address: 009Ch Size: 8 bits

Bits	Description	Type	Default
7:1	**RESERVED**	RO	-
1	**VREG_LOW_OVR** When set, the 1.8V voltage regulator is placed in Low-Power mode whenever both the Ring Oscillator and 48 MHz Relaxation Oscillator are disabled.	R/W	0b
0	**VREG Low Power Enable (VREG_LOW_EN)** When set, the 1.8V voltage regulator is placed in Low-Power mode. **Note:** This bit has no meaning when the VREG_LOW_OVR bit is set.	R/W	0b

7.5.39 GENERAL PURPOSE TIMER LOAD REGISTER (GP_TIMER_LOAD)

Address: 00A0h Size: 16 bits

BITS	DESCRIPTION	TYPE	DEFAULT
15:0	**GP Timer Load** This register defines the value to be loaded into the general purpose timer, from which it will count down. The valid range for this register is 0001h - FFFFh. This field has units of 1 ms. **Note:** Programming 0h into this register is not valid. **Note:** Software shall not change the contents of this register while the RESET bit is set and shall wait until this bit is cleared.	R/W	FFFFh

© 2024 Microchip Technology Inc. and its subsidiaries

7.5.40 GENERAL PURPOSE TIMER INTERRUPT SOURCE REGISTER (GP_TIMER_INT_SRC)

Address: 00A2h Size: 8 bits

BITS	DESCRIPTION	TYPE	DEFAULT
7:1	**RESERVED**	RO	-
0	**GP_UFLOW** This bit will be set when the general purpose timer underflows. The GP_TIMER_INT interrupt in Interrupt Status Register (INT_STS) persists until this bit is cleared. When the DIS_ON_UFLOW bit of the General Purpose Timer Control Register (GP_TIMER_CTL) is set, the assertion of this bit is delayed until the timer is fully disabled (100s us).	R/WC	0b

7.5.41 GENERAL PURPOSE TIMER CONTROL REGISTER (GP_TIMER_CTL)

Address: 00A3h Size: 8 bits

BITS	DESCRIPTION	TYPE	DEFAULT
7	**STATUS** This bit indicates the operational state of the GP timer. 0: Timer is disabled and not counting 1: Timer is enabled and counting When this bit is cleared, the timer has halted operation.	RO	0b
6:3	**RESERVED**	RO	-
2	**DIS_ON_UFLOW** When this bit is set, the GP timer is automatically disabled upon detection of the underflow condition. Additionally, the ENABLE bit is cleared upon underflow detection and the assertion of GP_UFLOW will be delayed until the GP Timer has halted operation and the STATUS bit is cleared.	R/W	0b
1	**RESET** Timer Reset. When set, this bit stops the timer and resets the internal counter to the value in the General Purpose Timer Load Register (GP_TIMER_LOAD). 0: Timer is not in Reset 1: Timer is in Reset **Note:** This bit does not clear until propagation of the Reset completes. This may take 100s us.	R/SC	0b

© 2024 Microchip Technology Inc. and its subsidiaries

BITS	DESCRIPTION	TYPE	DEFAULT
0	**ENABLE** Timer Enable. This bit is used to start and stop the General Purpose Timer Load Register (GP_TIMER_LOAD). This bit does not reset the timer count. This is automatically cleared when the DIS_ON_UFLOW bit is set. 0: Timer is disabled 1: Timer is enabled	R/W	0b

7.5.42 GENERAL PURPOSE TIMER COUNT REGISTER (GP_TIMER_COUNT)

Address: 00A4h Size: 16 bits

BITS	DESCRIPTION	TYPE	DEFAULT
15:0	**GP Timer Counter** This register returns the current value of the general purpose timer. Before reading this register, the GP timer must be disabled by clearing the ENABLE bit.	RO	0h

© 2024 Microchip Technology Inc. and its subsidiaries

8.0 CABLE PLUG ORIENTATION AND DETECTION

This section details the functions that control and monitor the CC pins, monitor the **VBUS_DET** pin, control the VCONN FETs and sample the **CFG_SEL** pin.

8.1 CC Comparator

The device integrates a comparator and DAC circuit to implement Type-C attach and detach functions. It supports up to eight programmable thresholds for attach detection between UFP and DFP. When operating as a UFP, the device supports detecting changes in the DFP's advertised thresholds to determine current sourcing capability. The default nominal values for the thresholds detected by the CC comparators are:

- 0.20 V
- 0.40 V
- 0.66 V
- 0.80 V
- 1.23 V
- 1.60 V
- 2.60 V
- 3.0 V Proprietary Mode

TABLE 8-1: CABLE DETECT SUMMARY

Parameter	Threshold CSR	Description	Min	Typ	Max
DFP_ACT_DEF	CC_THR0	Detecting an active cable when configured as DFP and advertising default USB current.		0.20 V	
UFP_DFP_DEF	CC_THR0	Detecting DFP attach when configured as UFP and DFP is advertising default USB current.		0.20 V	
DFP_ACT_1A5	CC_THR1	Detecting an active cable when configured as DFP and advertising 1.5A.		0.40 V	
UFP_DFP_1A5	CC_THR2	Detecting DFP attach when configured as UFP and DFP is advertising 1.5A.		0.66 V	
DFP_ACT_3A0	CC_THR3	Detecting an active cable when configured as DFP and advertising 3.0A.		0.80 V	
UFP_DFP_3A0	CC_THR4	Detecting DFP attach when configured as UFP and DFP is advertising 3.0A.		1.23 V	
DFP_UFP_DEF	CC_THR5	Detecting UFP attach when configured as DFP advertising default USB current.		1.60 V	
DFP_UFP_1A5	CC_THR5	Detecting UFP attach when configured as DFP advertising 1.5A.		1.60 V	
DFP_UFP_3A0	CC_THR6	Detecting UFP attach when configured as DFP advertising 3.0A.		2.60 V	

The following tables summarize the expected thresholds to be matched in the CCx Match Registers (CCx_MATCH) CCx Match Registers (CCx_MATCH) for various configurations. Refer to the CCx Debounce Clear Enable Registers (CCx_DBCLR_EN) for the debouncer mask used in these configurations.

TABLE 8-2: DFP CC MATCH SUMMARY

CC State	CC THR0	CC THR1	CC THR2	CC THR3	CC THR4	CC THR5	CC THR6	CC THR7
Advertise Default USB Current and connected to powered cable	0	0	0	0	0	0	0	0
Advertise 1.5 A and connected to powered cable	0	0	0	0	0	0	0	0
Advertise 3.0 A and connected to powered cable	0	0	0	0	0	0	0	0
Advertise Default USB Current and connected to UFP	1	0	0	0	0	0	0	0
Advertise 1.5 A and connected to UFP	0	1	0	0	0	0	0	0

© 2024 Microchip Technology Inc. and its subsidiaries

TABLE 8-2: DFP CC MATCH SUMMARY (CONTINUED)

CC State	CC THR0	CC THR1	CC THR2	CC THR3	CC THR4	CC THR5	CC THR6	CC THR7
Advertise 3.0 A and connected to UFP	0	0	0	1	0	0	0	0
Advertise Default USB Current and no connect (vOpen)	1	0	0	0	0	1	0	0
Advertise 1.5 A and no connect (vOpen)	0	1	0	0	0	1	0	0
Advertise 3.0 A and no connect (vOpen)	0	0	0	1	0	0	1	0
Proprietary Mode and no connect (vOpen)	0	0	0	0	0	0	0	1

TABLE 8-3: UFP CC MATCH SUMMARY

CC State	CC THR0	CC_ THR1	CC THR2	CC THR3	CC THR4	CC THR5	CC THR6	CC THR7
Powered cable detected	0	0	0	0	0	0	0	0
No Connect (SNK.Open)	0	0	0	0	0	0	0	0
DFP Connected and advertising default USB current	1	0	0	0	0	0	0	0
DFP Connected and advertising 1.5 A	1	0	1	0	0	0	0	0
DFP Connected and advertising 3.0 A	1	0	1	0	1	0	0	0
DFP Connected and advertising proprietary current	1	0	1	0	1	0	0	1

The following examples illustrate the rationale behind the expected matches in the previous tables.

DFP: Advertise 1.5 A and connected to powered cable, UFP not attached

In this scenario the DFP is advertising 1.5 A and connected to a powered cable. The UFP is not attached. The vRd value measured will be less than 0.35V per specification.

In this configuration, the following thresholds are enabled for matching:

- CC_THR1 (DFP_ACT_1A5)
- CC_THR5 (DFP_UFP_1A5)

Therefore, the value programmed into CCx Debounce Clear Enable Registers (CCx_DBCLR_EN) and CCx Match Enable Registers (CCx_MATCH_EN) would be 0x22.

Since the vRd is less than 0.35V, no threshold matches would be detected on CCx Match Registers (CCx_MATCH) or CCx Change Status Registers (CCx_CHG_STS).

DFP: Advertise 3.0 A and connected to UFP

In this scenario the DFP is advertising 3.0 A and connected to a UFP. The vRd value measured will be > 0.85V and < 2.45V.

In this configuration the following thresholds are enabled for matching:

- CC_THR3 (DFP_ACT_3A0)
- CC_THR6 (DFP_UFP_3A0)

Therefore, the value programmed into CCx Debounce Clear Enable Registers (CCx_DBCLR_EN) and CCx Match Enable Registers (CCx_MATCH_EN) would be 0x44.

In this case only CC_THR3 would be matched. Bit 3 would be set in both CCx Match Registers (CCx_MATCH) or CCx Change Status Registers (CCx_CHG_STS) after the debounce interval.

UFP: Connected to DFP advertising 3.0 A

In this case the UFP is connected to a DFP advertising 3.0A. The vRd value measured will be > 1.3V and < 2.04 V.

In this configuration the following thresholds are enabled for matching:

- UFP_DFP_DEF (CC_THR0)
- UFP_DFP_1A5 (CC_THR2)
- UFP_DFP_3A0 (CC_THR4)

© 2024 Microchip Technology Inc. and its subsidiaries

Therefore, the value programmed into CCx Debounce Clear Enable Registers (CCx_DBCLR_EN) and CCx Match Enable Registers (CCx_MATCH_EN) would be 0x15.

In this case all three thresholds would be matched since the value of vRd must exceed CC_THR4, which is 1.23V. Bits 0, 2 and 4 would be set in both CCx Match Registers (CCx_MATCH) or CCx Change Status Registers (CCx_CHG_STS).

8.2 DFP Operation

When operating as a DFP, the device implements current sources to advertise current charging capabilities on both CC pins.

When a UFP connection is established, the current driven across the CC pins creates a voltage across the UFP's Rd pull-down that can be detected by the integrated CC comparator. The voltages monitored are summarized in Table 8-4. When connected to an active cable, an alternative pull-down (Ra) appears on the CC pin.

The DFP also integrates two 5V FETs for implementing the VCONN function. This is further discussed in Section 8.8, "VCONN Operation".

TABLE 8-4: SOURCE DETECTION

CC1	CC2	Connection State	CC Comparator State	VBUS	VCONN
Open	Open	Nothing Attached	Monitor both CC pins for attach.	Off	Off
Rd	Open	UFP Attached	Monitor **CC1** for detach.	On	Off
Open	Rd	UFP Attached	Monitor **CC2** for detach.	On	Off
Ra	Open	Powered Cable, No UFP attached	Monitor **CC2** for UFP attach. Monitor **CC1** for cable detach.	Off	Off
Open	Ra	Powered Cable, No UFP attached	Monitor **CC1** for UFP attach. Monitor **CC2** for cable detach.	Off	Off
Ra	Rd	Powered Cable, UFP attached	Monitor **CC2** for UFP detach. **CC1** is not monitored for detach.	On	On
Rd	Ra	Powered Cable, UFP attached	Monitor **CC1** for UFP detach. **CC2** is not monitored for detach.	On	On
Rd	Rd	Debug accessory mode attached	Monitor both CC pins for detach.	Off	Off
Ra	Ra	Audio accessory mode attached.	Monitor both CC pins for detach.	Off	Off

8.2.1 RP CURRENT SOURCES

In order to advertise the current charging capabilities of the device via the integrated port power controller or external power circuit, Rp current sources are used. The current source can be selected by software. using CC1 RP Value and CC2 RP Value in the CC Control Register (CC_CTL). Table 8-5 summarizes the values supported by the current sources in regards to the programmed value.

TABLE 8-5: RP CURRENT SOURCES

DFP Advertisement	Current Source (1.7V to 5.5V)	RPx Value
Disabled		00b
Default USB Power	80 uA +/-20%	01b
1.5A @ 5V	180 uA +/-8%	10b
3.0A @ 5V	330 uA +/-8%	11b

The current source coupled with the CC pins for RP advertisement is also used for sampling the **CFG_SEL** pin. When the **CFG_SEL** pin is sampled, the current is steered away from the CC pins and no RP value is advertised. See the VBUS Comparator Control field in VBUS Control Register (VBUS_CTL) for further details.

© 2024 Microchip Technology Inc. and its subsidiaries

8.2.2 SOURCE ATTACH DETECTION

When configured as a source, the following sections describe the steps that are taken to determine if an attach has occurred.

1. Software accesses the device via SPI, which wakes the device up and enables the 48 MHz oscillator.
2. Software programs the CC Comparator Control to 00b and disables the CC debouncer.
3. Software polls CC_DB_ACTIVE until it reads back to indicate the CC debouncer is inactive.
4. Software programs the Match Debounce Register (MATCH_DEB) as required for the tPDDebounce period.
5. Software programs the VBUS Debounce Register (VBUS_DEB) as required.
6. Software programs the CCx Debounce Clear Enable Registers (CCx_DBCLR_EN) and CCx Match Enable Registers (CCx_MATCH_EN) as required to match the thresholds of interest.
7. Software programs the CCx Sample Enable Registers (CCx_SAMP_EN) and VBUS Match Enable Register (VBUS_MATCH_EN) to detect VBUS VSafe0V Match (VSAFE0V_THR_MATCH).
8. Software enables the CC_MATCH_VLD, CC1_MATCH_CHG and CC2_MATCH_CHG interrupt via CC Interrupt Enable Register (CC_INT_EN).
9. Software enables the VBUS_MATCH_VLD interrupt via the Power Interrupt Enable Register (PWR_INT_EN).

> **Note:** Assertion of CC_MATCH_VLD indicates that the initial CC debounce of both CC pins has completed and a valid value is available in the CCx Match Registers (CCx_MATCH). VBUS_MATCH_VLD indicates a valid value is available in the VBUS Match Register (VBUS_MATCH).

10. Software enables **IRQ_N** assertion by enabling the CC_INT, VBUS_INT and PWR_INT in the Interrupt Enable Register (INT_EN).
11. Software programs the RP current sources via CC1 RP Value and CC2 RP Value in the CC Control Register (CC_CTL).
12. Software programs the CC Threshold x Registers (CC_THRx), if required.
13. Software programs the CC Comparator Control to sample both CC pins and enables the CC debouncer. The CC_DB_ACTIVE bit will assert soon after.
14. Software sets the Clock Control Register (CLK_CTL) to disable all clock sources except for the keep-alive clock.
15. When a UFP is attached, an Rd pull-down or Ra pull-down from active cable is connected to one of the CC pins. The CC comparator detects this.
16. Changes in state of the CC pin are recorded in the CCx Match Registers (CCx_MATCH) and CCx Change Status Registers (CCx_CHG_STS) after the programmed debounce period.
17. CC_MATCH_VLD and CC1_MATCH_CHG or CC2_MATCH_CHG interrupt assert and CC_INT asserts, which in turn asserts the **IRQ_N** pin. Likewise, assertion of VBUS_MATCH_VLD causes PWR_INT to assert and also asserts **IRQ_N**.
18. Software implements a further debounce of the CC match for tCCDebounce in order to detect the attachment.
19. After VBUS_MATCH_VLD assertion, software must verify that the VBUS Match Register (VBUS_MATCH) indicates vSafe0V is on VBUS.
20. After an attachment, software programs the device to power VBUS via the integrated PPC, if required. If the power source is external to the device, software configures that source as required.
21. In the event that an active cable is attached, per the CCx Match Registers (CCx_MATCH), VCONN power may be supplied by appropriately setting VCONN1 Control or VCONN2 Control in the VBUS Control Register (VBUS_CTL).
22. CC Communication Select in the CC Control Register (CC_CTL) is set by software to appropriately connect the baseband interface to the CC pin with the Rd pull-down.
23. The DFP may attempt to communicate with the attached device utilizing the PD MAC, if desired.

8.2.3 SOURCE DETACH DETECTION

When configured as a source, the detachment of the partner UFP is determined by monitoring the appropriate CC pin (with the Rd pull-down) for a voltage exceeding DFP_UFP_DEF, DFP_UFP_1A5 or DFP_UFP_3A0, depending on the charging current advertised by the device.

The following describes the steps that are taken to determine if a detach has occurred when operating in companion mode.

APPLICATION NOTE: In order to avoid false disconnects in the Attached.SNK state during heavy PD message traffic, software must not look at the CC detect status while a PD contract is in place, even though the Type-C spec permits doing so.

APPLICATION NOTE: Software should set a 3A advertisement while it is a source and a PD contract is in place in order to avoid false

© 2024 Microchip Technology Inc. and its subsidiaries

disconnects in the Attached.SRC state during heavy PD message traffic; a 1.5A advertisement (even though permitted by the Type-C spec) is not sufficient to avoid this issue due to the lower vOPEN threshold. An exception to this recommendation is when “Collision Avoidance” is implemented.

The following steps assume the CC debouncer has previously been used to detect attachment per the prior section.

1. Software accesses the device via SPI, which wakes the device up and enables the 48 MHz oscillator.
2. Software programs the CCx Debounce Clear Enable Registers (CCx_DBCLR_EN) as required to enable per threshold debouncing. Typically this only involves disabling the thresholds not corresponding to vOPEN.
3. Software enables CC1_MATCH_CHG or CC2_MATCH_CHG interrupt via CC Interrupt Enable Register (CC_INT_EN).
4. Software enables **IRQ_N** via asserting the respective CC_INT bit in the Interrupt Enable Register (INT_EN).
5. Software programs the CC Comparator Control to sample the appropriate CC pin.
6. The device samples the respective CC pin while operating off of the 20 kHz clock.
7. Changes in state of the CC are reflected in the respective CCx Match Registers (CCx_MATCH) and CCx Change Status Registers (CCx_CHG_STS).
8. CC1_MATCH_CHG, or CC2_MATCH_CHG, interrupt asserts, CC_INT asserts, which in turn asserts the **IRQ_N** pin.
9. Software implements a further debounce of the CC match for tCCDebounce in order to detect the detachment.
10. If VCONN is being supplied, than the VCONN FET shall be disabled in software by appropriately setting the VCONN1 Control or VCONN2 Control in the VBUS Control Register (VBUS_CTL). In this case, software must also discharge VCONN as defined in Section 8.8.1, "VCONN Discharge Programming Model".
11. Software disables the PPC which causes the internal 5V power switch to open, if required. Power may have alternatively been provided by an external power source.
12. Internal 100 Ohm VBUS discharge switch is closed, if required.
13. Discharge switch remains closed until vSafe0V threshold is crossed.
14. If the vSafe0V threshold is not crossed within the VBUS Off Register (VBUS_OFF), a VBUS Discharge Error interrupt will be triggered, and the **IRQ_N** pin will be asserted.

Note:	Occurrence of VBUS Discharge Error interrupt indicates a potentially catastrophic system power issue.

15. Internal discharge switch is opened.
16. The part is configured by software to detect a UFP attach. The 48 MHz oscillator is disabled. Only the keep-alive clock remains enabled.

8.3 UFP Operation

When operating as a UFP, the device applies an Rd pull-down on both CC lines and waits for a DFP connection from the assertion of VBUS. The CC comparator is used to determine the advertised current charger capabilities supported by the DFP. The supported Rd values are defined in Table 8-6.

TABLE 8-6: RD TERMINATION

Rd Implementation	Min	Typ	Max
Rd (Trimmed)	***TBD***	5.1 kOhm	***TBD***
Rd (Dead Battery)	4.1 kOhm	5.1 kOhm	6.1 kOhm
Threshold Voltage	***TBD***	0.9 V	***TBD***

8.3.1 SINK ATTACH DETECTION

The following steps illustrate how the device may be programmed to detect an attachment when operating as a sink. The following discussion does not cover dead-battery cases, which are described in Section 8.7.3, "Dead Battery (MCP22350-2 Only)".

1. Software accesses the device via SPI which wakes the device up and enables the 48 MHz oscillator.
2. Software programs the CC Comparator Control to 00b and disables the CC debouncer.
3. Software programs the VBUS Comparator Control to 00b and disables the VBUS debouncer.
4. Software polls CC_DB_ACTIVE and VBUS_DB_ACTIVE until they read back 0b to indicate that the CC debouncer and VBUS debouncer are inactive. Software programs the Match Debounce Register (MATCH_DEB) as required for the tPDDebounce interval.
5. Software programs the CCx Debounce Clear Enable Registers (CCx_DBCLR_EN) as required to match the thresholds of interest.

© 2024 Microchip Technology Inc. and its subsidiaries

6. Software programs the CC1 Pull-Down Value and CC2 Pull-Down Value in the CC Control Register (CC_CTL) to advertise trimmed Rd.
7. Software enables CC_MATCH_VLD, CC1_MATCH_CHG or CC2_MATCH_CHG interrupt via the CC Interrupt Enable Register (CC_INT_EN).
8. Assertion of CC_MATCH_VLD indicates that the initial CC debounce of both CC pins has completed and a valid value is available in the CCx Match Registers (CCx_MATCH).
9. Software programs the CCx Debounce Clear Enable Registers (CCx_DBCLR_EN) as required to enable the respective threshold(s) debouncing.
10. Software enables VBUS_INT to detect VBUS by configuring the VBUS Match Register (VBUS_MATCH).
11. Software enables VBUS_MATCH_VLD by configuring the Power Interrupt Enable Register (PWR_INT_EN).
12. Software enables **IRQ_N** via the configured respective bits for CC_INT, PWR_INT and VBUS_INT in the Interrupt Enable Register (INT_EN).
13. Software programs the CC Comparator Control to sample both CC pins.
14. Software programs VBUS Comparator/DAC to detect vSafe5V via the VBUS Comparator Control in the VBUS Control Register (VBUS_CTL) and setting VBUS_THR0 and VBUS_THR1 via the VBUS Threshold x Registers (VBUS_THRx).
15. To save power, software turns off all clock sources with the exception of 20 KHz keep-alive clock via Clock Control Register (CLK_CTL).
16. Upon connection to a partner DFP, VBUS is powered to 5V.
17. After the programmed debounce interval, the respective CCx Change Status Registers (CCx_CHG_STS) are updated and the respective CC1_MATCH_CHG or CC2_MATCH_CHG interrupt asserts, which in turn asserts CC_INT which in turn asserts **IRQ_N**.

Note: Assertion of CC_MATCH_VLD indicates that the initial CC debounce of both CC pins has completed and a valid value is available in the CCx Match Registers (CCx_MATCH).

18. VBUS is detected by the VBUS_DET comparator and debounced for the period defined by the VBUS Debounce Register (VBUS_DEB). The VBUS_INT interrupt asserts, which in turn asserts IRQ_N.

Note: Assertion of VBUS_MATCH_VLD indicates that the initial CC debounce of both CC pins has completed and a valid value is available in the VBUS Match Register (VBUS_MATCH).

19. In order to detect the attach condition, software must debounce the CC match for tCCDebounce and VBUS for the PD Debounce Register (PD_DEB)
20. After attachment, software configures CC Communication Select in the CC Control Register (CC_CTL) to appropriately connect the baseband interface to the CC with the Rp pull-up, if PD communication is desired.
21. DFP may communicate with the device.

8.3.2 SINK DETACH DETECTION

The DFP detach is detected by the removal of VBUS. The VBUS comparator must always be enabled for the UFP to detect this condition.

1. Software programs the VBUS Comparator Control to 00b and disables the VBUS debouncer.
2. Software polls VBUS_DB_ACTIVE until it reads back 0b to indicate that the VBUS debouncer is inactive.
3. Software programs the VBUS Debounce Register (VBUS_DEB) as required.
4. Software programs the CCx Sample Enable Registers (CCx_SAMP_EN) as required to enable the respective threshold(s) debouncing.
5. Software enables VBUS_INT, which is then used to detect VBUS via the VBUS Match Enable Register (VBUS_MATCH_EN).
6. Software enables **IRQ_N** by configuring the respective bit for VBUS_INT in the Interrupt Enable Register (INT_EN).

Note: VBUS_THR0 and VBUS_THR1 are adjusted via the VBUS Threshold x Registers (VBUS_THRx) to vSafe5V, if required.

7. Software enables the VBUS Comparator/DAC via the VBUS Comparator Control bit in the VBUS Control Register (VBUS_CTL).
8. To save power, software turns off all clock sources with the exception of the 20 KHz keep-alive clock via the Clock Control Register (CLK_CTL).
9. DFP removes VBUS.
10. After the VBUS debounce period, the VBUS Match Register (VBUS_MATCH) and VBUS Change Status Register (VBUS_CHG_STS) are updated. The VBUS_INT interrupt asserts, which in turn asserts **IRQ_N**.
11. Software continues to monitor VBUS to determine if it stays below vSafe5V for a duration of

© 2024 Microchip Technology Inc. and its subsidiaries

tPdDebounce.

8.4 DRP Operation (Legacy)

This section describes a usage of the device for implementing a DRP attach. In this configuration, software utilizes the device to alternate between a source and sink advertisement with an interval of tDRP per the USB Type-C Specification.

The steps for initially configuring the device to advertise source capabilities follows the steps defined in Section 8.2.2, "Source Attach Detection". Software must also implement the tDRP timer. If a sink is not detected within this time, software shall change the device's role to sink and again attempt an attach detection.

1. Software accesses the device via SPI, which wakes the device up and enables the 48 MHz oscillator.
2. Software programs the CC Comparator Control to 00b and disables the CC debouncer.
3. Software polls CC_DB_ACTIVE until it reads back to indicate the CC debouncer is inactive.
4. Software programs the Match Debounce Register (MATCH_DEB) as required for the tPDDebounce period.
5. Software programs the CC Threshold x Registers (CC_THRx), if required.
6. Software programs the CCx Debounce Clear Enable Registers (CCx_DBCLR_EN) and CCx Match Enable Registers (CCx_MATCH_EN) as required to match the thresholds of interest.
7. Software enables the CC_MATCH_VLD, CC1_MATCH_CHG and CC2_MATCH_CHG interrupts via the CC Interrupt Enable Register (CC_INT_EN).
8. Software enables **IRQ_N** assertion by enabling the CC_INT in the Interrupt Enable Register (INT_EN).
9. Software programs the RP current sources via the CC1 RP Value and CC2 RP Value in the CC Control Register (CC_CTL).
10. Software programs the CC Comparator Control to sample both CC pins and enable the CC debouncer. The CC_DB_ACTIVE bit will assert soon after.
11. Software sets the Clock Control Register (CLK_CTL) to disable all clock sources except for the keep-alive clock.

Note:	Assertion of CC_MATCH_VLD indicates that the initial CC debounce of both CC pins has completed and a valid value is available in the CCx Match Registers (CCx_MATCH).

If after time tDRP, an attachment is not detected, software shall configure the device to be a sink and attempt to detect the presence of a source. This is similar to the steps defined in Section 8.3.1, "Sink Attach Detection".

1. Software accesses the device via SPI which wakes the device up and enables the 48 MHz oscillator
2. Software programs the CC Comparator Control to 00b and disables the CC debouncer.
3. Software polls CC_DB_ACTIVE until it reads back 0b to indicate that the CC debouncer is inactive.
4. Software programs the CCx Debounce Clear Enable Registers (CCx_DBCLR_EN) as required to match the thresholds of interest.
5. Software programs detection for vSafe5V by setting VBUS_THR0 and VBUS_THR1 in the VBUS Threshold x Registers (VBUS_THRx). The CCx Sample Enable Registers (CCx_SAMP_EN) are programmed to debounce these thresholds.
6. Software programs CC1 Pull-Down Value and CC2 Pull-Down Value in the CC Control Register (CC_CTL) to advertise trimmed Rd.
7. Software enables the CC_MATCH_VLD, CC1_MATCH_CHG or CC2_MATCH_CHG interrupts via the CC Interrupt Enable Register (CC_INT_EN).
8. Software enables VBUS_MATCH_VLD by configuring the Power Interrupt Enable Register (PWR_INT_EN).
9. Software enables **IRQ_N** via the configured respective bits for CC_INT, PWR_INT and VBUS_INT in the Interrupt Enable Register (INT_EN).
10. Software programs the CC Comparator Control to sample both CC pins.
11. To save power, software turns off all clock sources with the exception of the 20 KHz keep-alive clock via the Clock Control Register (CLK_CTL).

If after time tDRP, an attachment is not detected, software shall configure the device to be a source and attempt to detect the presence of a sink.

Note:	Assertion of CC_MATCH_VLD indicates that the initial CC debounce of both CC pins has completed and a valid value is available in CCx Match Registers (CCx_MATCH).

Note:	Assertion of VBUS_MATCH_VLD indicates that the initial CC debounce of both CC pins has completed and a valid value is available in VBUS Match Register (VBUS_MATCH).

© 2024 Microchip Technology Inc. and its subsidiaries

8.5 DRP Offload

DRP offload enables the device to manage the DRP toggle. This is beneficial as it allows the host CPU to remain in a low-power state until a connection is detected.

DRP offload toggles between source and sink advertisement by alternating between enabling Rp current sources and Rd pull-downs for a period of tDRP (DRP Time Register). The duty cycle between source and sink advertisement is determined by the DRP Duty Cycle Register. The DRP Time Register may be written by firmware or generated automatically via a pseudo random number generator. The latter approach should be used to reduce the probability of collisions when connecting. It is selectable whether the DRP cycle shall first advertise UFP or DFP via the DRP Initial State (DRP_INIT) bit in DRP Control Register.

A connection is detected after a successful debounce for a period defined by the Match Debounce Register. VBUS is checked to be below vSafe0V for the DFP case. This results in **IRQ_N** assertion and automatic disablement of the DRP toggle. Firmware must further debounce for the period tPDDebounce before determining if a valid match is present. If a match has not occurred, firmware shall enable DRP again.

A pseudo random number generator implemented via an LFSR is utilized to generate the DRP period. The 16-bit seed is defined by the DRP LFSR Seed Register. When enabled, the LFSR operates off of the 20 KHz clock and updates every 100 us. LFSR Enable (LFSR_EN) in the DRP Control Register is set.

Hardware limits the total DRP period to be between 50 ms and 100 ms in order to comply with the USB Type-C specification.

8.6 Collision Avoidance

An alternative mode of operation is required to enable the CC detection circuit to facilitate software implementation of collision detection, which was incorporated into version 3.0 of the USB PD Specification.

In order to avoid message collisions due to asynchronous Messaging (AMS) sent from the sink, the source sets Rp to SinkTxOk (3A@5V) to indicate to the sink that it is OK to initiate an AMS. When the source wishes to initiate an AMS, it sets Rp to SinkTxNG (1.5A@5V). When the sink detects that Rp is set to SinkTxOk, it may initiate an AMS. When the sink detects that Rp is set to SinkTxNG, it shall not initiate an AMS and shall only send messages that are part of an AMS that the source has initiated.

When operating as a sink, a mechanism is required for quickly determining whether the source is advertising SinkTxNG or SinkTxOK on Rp.

A collision avoidance mechanism exists to enable software to instruct the device to sample only a single threshold on a single CC pin. This results in a cycle through both thresholds taking only 100 us, making it easier for software to meet the timing constraints mandated by SinkTxOk in the specification. Two CCx Sample Enable Registers (CCx_SAMP_EN) are provided to enable software to specify which subsets of the CC thresholds shall be sampled via setting the respective bit. In the case of collision avoidance, only the threshold corresponding to SinkTxOK shall be set on the connected CC pin. This corresponds to UFP_DFP_3A0 (CC_THR4). The CC Comparator Control field in CC Control Register (CC_CTL) shall be set to the CC pin utilized for PD communication.

To prevent false positive detection of SinkTXOK when a PD packet is being transmitted or received, a debounce value on the order of 7 ms would need to be programmed into the Match Debounce Register (MATCH_DEB). Such a large value would impair the software's ability to operate as a sink, to detect SinkTXOK and to transmit a PD message within the time defined in the PD specification by SinkTxTime. The BLK_PD_MSG bit in CC Hardware Control Register (CC_HW_CTL) has been incorporated to handle the above scenario and enable software to program a sub millisecond debounce value. When using this mode of operation, a minimum value of 100 us shall be used for the Match Debounce Register (MATCH_DEB).

The below sequence illustrates the steps to enable Collision Avoidance for a Sink. This sequence is used after a connection and PD contract has been established.

Note:	The units of the Match Debounce Register (MATCH_DEB) are determined by the MATCH_DB_UNITS bit in CC Hardware Control Register (CC_HW_CTL). When this bit is clear, the units are 1.6 ms. When this bit is set, the units are 100 us.

1. Sink establishes connection with source, and a PD contract is negotiated. Sink wants to transmit AMS to source.
2. Via the CC Hardware Control Register (CC_HW_CTL), the MATCH_DB_UNITS are set to 1b to utilize 100 us units for the CC match debouncer. The BLK_PD_MSG bit is set to filter PD traffic from the debouncer.
3. Software sets the Match Debounce Register (MATCH_DEB) to 400 us by writing four into the register.
4. Software configures CC_THR4 to enable interrupt assertion via the CCx Match Enable Registers (CCx_MATCH_EN).
5. Software configures CC_THR4 for sampling via the CCx Sample Enable Registers (CCx_SAMP_EN).

© 2024 Microchip Technology Inc. and its subsidiaries

6. Via the CC Control Register (CC_CTL), the CC Comparator Control selects the CC pin connected to the source's Rp.
7. Software waits for indication that source's Rp is SinkTxOK via a match detected on CC_THR4.
8. Software initiates transmission of PD message to source.

APPLICATION NOTE: Software must guarantee that a sufficient gap exists in between consecutively transmitted PD messages to enable the source RP value to settle on the CC line. Studies by USB-IF members have shown the settling time may take in excess of 40 µs.

8.7 Fast Role Swap (FRS)

This feature is used to detect when a partner source has lost power. Upon detection of FRS signaling, the "old sink" transitions to be a source and begins supplying VBUS.

When operating as a sink, the FRS mode of operation enables detection of FRS signaling. Detection results in **IRQ_N** assertion and this event may also be mapped as a PIO override source. When operating as a source, upon detection of loss of power, the device will transmit FRS signaling. This is initiated by either assertion of a selected PIO or a CSR write.

The following FRS related features are supported:

- Ability to detect reception of FRS signaling
- High bandwidth and current boost mode for CC comparator to increase sampling frequency
- Interrupt and PIO assertion upon FRS detection
- PIO override support for FRS detection as a source
- Ability to initiate FRS signaling via GPIO assertion or register write
- Control 5 Ohm (Rsw) pull-down resistor

8.7.1 FRS SINK OPERATION

When operating as a sink, the device is configured to detect FRS signaling by setting FRS Detect Enable (FRS_DET_EN) in FRS Control Register. The CC detection logic is programmed to detect three thresholds (SinkTxOK, SinkTXNG, FRSWAP) and samples each threshold in round robin fashion. The sampling rate is determined by CC Sample Clock Register.

When a match is detected on the FRSWAP threshold, the CC detection logic will "park" at this threshold and continue monitoring the output of the comparator. While "parked", the output of the CC comparator will be sampled at an increased rate of 12 MHz. This higher sampling rate will prevent PD messages from inadvertently looking like FRS signaling, which will happen on occasion when the sampling rate is similar or slower than the ~270 kbps rate of PD messages.

It will continue debouncing for the amount of time specified in the FRS CC Debounce Register. The FRSWAP threshold is indicated by the FRS Threshold Select Register.

If the debounce is successful, then the FRS_RCV_STS interrupt is asserted and the CC detection logic resumes sampling all enabled thresholds. If the FRS debounce fails, the CC detection logic resumes sampling all enabled thresholds.

In this mode of operation, the CC Comparator operates at a faster rate in order to minimize the FRS detection latency. This is enabled by placing this the comparator into a high bandwidth mode. The CC High Bandwidth Mode Enable (CC_DET_HBW_EN) in CC Hardware Control Register must be set.

After detecting the FRS signaling, the "old sink" must start supplying vSafe5V at USB Type-C current VBUS no later than tSrcFRSwap (150 us) after VBUS has dropped below vSafe5V. This must be accomplished via circuitry external to the device.

Note:	The upper threshold used for vSafe5V should be used for determining when VBUS has dropped below vSafe5v to help meet tSrcFRSwap requirement.

Note:	Matching of a VBUS threshold may be selected as a source to a PIO override. Additionally, VBUS threshold match ANDed with FRS signal detect may also be used as a PIO override source.

8.7.2 FRS SOURCE OPERATION

The initial source shall signal a FRS request by driving the CC pin to ground with a resistance of less than 5 Ohms for a period defined by FRS Transmission Length Register. The FRS request signaling is initiated by either a CSR write or GPIO assertion.

The former case is implemented by setting the FRS Request (FRS_REQ_EN) bit in FRS Control Register. This bit self clears after the FRS request is transmitted. For the latter case, the PIO is selected by the FRS Request PIO (FRS_REQ_PIO) field in FRS Control Register.

Transmission of FRS signaling will take precedence over PD MAC TX communication. The FRS PD resistor is enabled in tandem on the CC pin determined by FRS CC Select (FRS_CC_SEL) in FRS Control Register. This configuration remains until FRS transmission has completed.

© 2024 Microchip Technology Inc. and its subsidiaries

8.7.3 DEAD BATTERY (MCP22350-2 ONLY)

Two variations of the Rd resistor are implemented as detailed in Table 8-6: Rd (Dead Battery) and Rd (Trimmed). The **CC1_DB_EN** and **CC2_DB_EN** pins exist to determine the operation of the CC pins in dead battery conditions and are to be connected externally via the PCB to the respective CC pin. The CC pins are configured to present either Hi-Z or an untrimmed Rd pull-down resistance when connected to a DFP advertising a pull-up resistance.

Figure 8-1 illustrates the configuration for supporting dead battery cases via hair pinning **CC*x*_DB_EN** and **CC*x*** together on the PCB. The UFP pull-up activates the FET in series with RD_DB and enables the untrimmed dead battery pull-down.

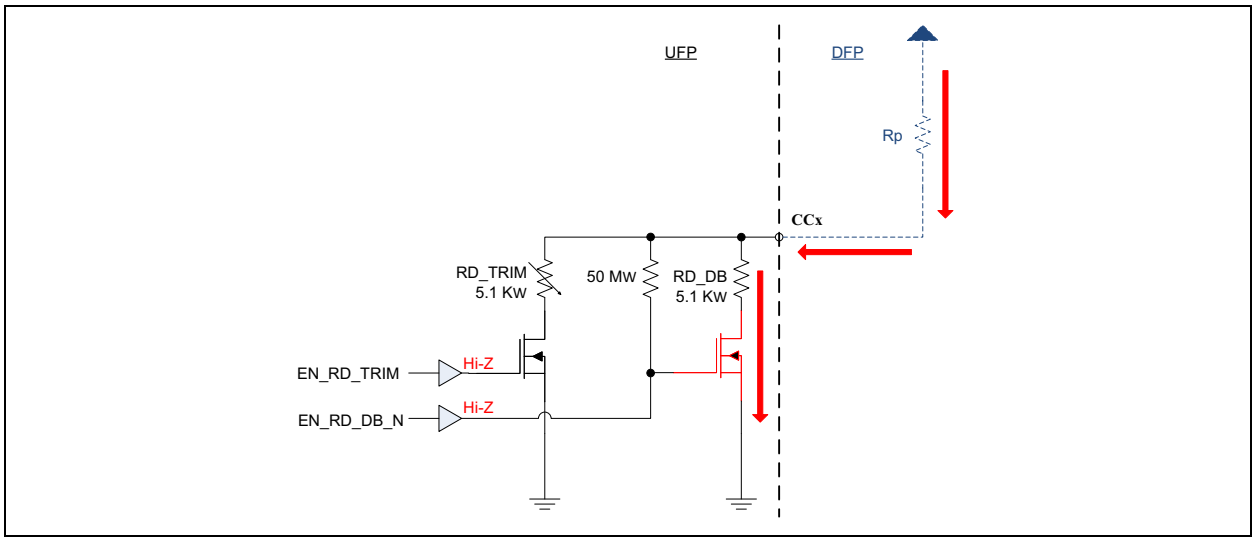

FIGURE 8-1: *CC Rd (Dead Battery).*

Figure 8-2 illustrates operation after the UFP has been powered over VBUS by the DFP. After the device is powered, EN_RD_DB asserts by default to keep the RD_DB pull-down activated.

Upon powering the host CPU, software simultaneously deasserts EN_RD_DB and asserts EN_RD_TRIM. Going forward, the device presents RD_TRIM.

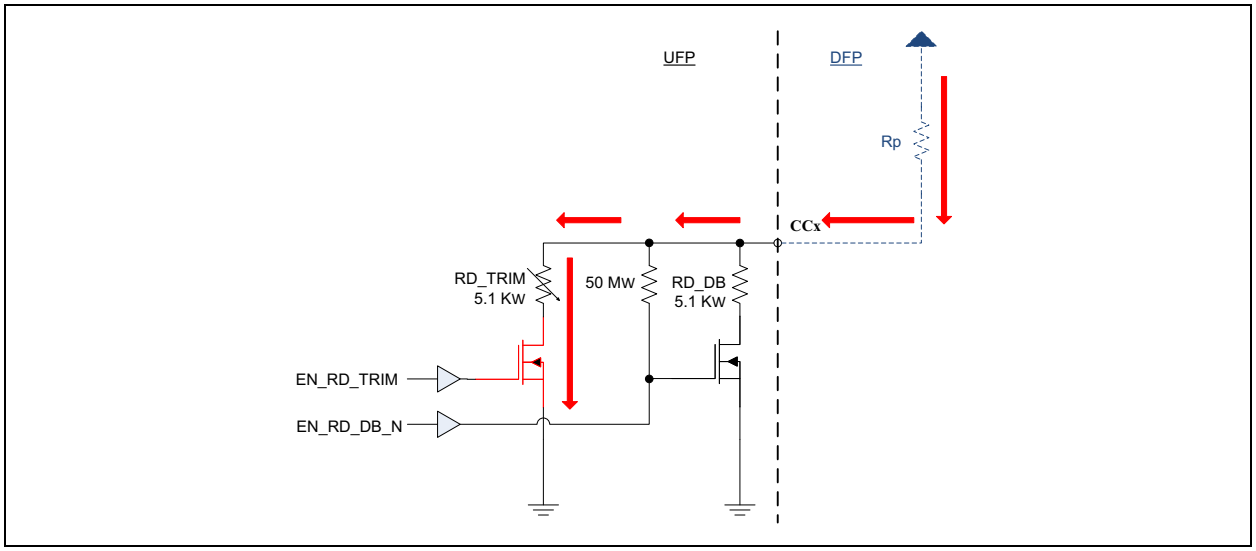

FIGURE 8-2: *CC Rd (Trim).*

The Rd resistor presented, trimmed or untrimmed, is controlled by the CC1 Pull-Down Value and CC2 Pull-Down Value in the CC Control Register (CC_CTL).

These register fields serve the basis for the EN_RD_TRIM and EN_RD_DB_N control signals depicted.

© 2024 Microchip Technology Inc. and its subsidiaries

8.8 VCONN Operation

VCONN is a 5V supply that is used to power circuitry in the USB Type-C plug, which is required to implement Electronically Marked Cables. By default, the DFP always sources VCONN when connected to an active cable. However, this may be changed by software by using PD VCONN_SWAP.

The VCONN FETs are enabled/disabled by software via the VCONN1 Control and VCONN2 Control bits in the CC Control Register (CC_CTL).

VCONN is monitored for an overcurrent condition via an internal monitoring circuit. A VCONN overcurrent condition is recognized when the event persists for a time longer than specified in the VCONN OCS and Back-Drive Debounce Register (VCONN_DEB). VCONN OCS monitoring is enabled via the VCONN OCS Enable bit in the VBUS Control Register (VBUS_CTL). In the event of the detection of a debounced over-current VCONN event, the enabled VCONN FET will be disabled. The OCS event also results in an automatic disablement of the respective VCONN1 Control and VCONN2 Control bits in the CC Control Register (CC_CTL).

8.8.1 VCONN DISCHARGE PROGRAMMING MODEL

Software may use the following programming model for implementing VCONN discharge when the device is operating as a DFP and a UFP disconnect has been detected.

1. Software determines the attached UFP has disconnected and disconnects the VCONN FET.
2. Software disables monitoring the CC thresholds corresponding to the attached CC pin.
3. The Rp current sources are disabled on both CC pins via CC1 RP Value or CC2 RP Value.
4. The Ra pull-down on the CC pin previously sourcing VCONN is selected via CC1 Pull-Down Value or CC2 Pull-Down Value. This initiates the VCONN discharge.
5. Software sets the CC threshold 0 to 150 mv (41d) via the CC Threshold x Registers (CC_THRx), which is the VCONN discharge threshold.
6. Software programs 01h into the CCx Debounce Clear Enable Registers (CCx_DBCLR_EN).
7. Software programs 01h into the CCx Match Enable Registers (CCx_MATCH_EN).
8. Software enables CC1_MATCH_CHG or CC2_MATCH_CHG interrupt via the CC Interrupt Enable Register (CC_INT_EN).
9. Via the CC Control Register (CC_CTL), the CC Comparator Control selects the CC pin that was sourcing VCONN.
10. Changes in state of the CC pin are recorded in CCx Match Registers (CCx_MATCH) and CCx Change Status Registers (CCx_CHG_STS) after the programmed debounce period.
11. After VCONN discharges below 150mv, **IRQ_N** asserts which indicates VCONN has been discharged. **IRQ_N** assertion of CC_MATCH_VLD with no threshold matches is also indicative of a complete discharge.
12. After the discharge has been completed, the device is in the Unattached.SRC state (Type-C Source FSM).

Note: Software should implement a timer to indicate a VCONN discharge error. This may be implemented using the General Purpose Timer. There is no specific requirement in the Type-C specification for a maximum discharge time.

Note: After the UFP disconnect is detected, firmware must disconnect the VCONN supply within tVconnOff (35 ms) per release 1.1 of the Type-C specification.

8.9 VBUS Detection

The device implements a comparator for determining when **VBUS** is within a programmed range, vSafe5V, or vSafe0V. VBUS is divided down externally via a 1:9 resistor divider to generate **VBUS_DET**. **VBUS_DET** is compared with an 8-bit threshold generated by an integrated DAC. The comparator is also shared by the **CFG_SEL** pin which is sampled automatically after a system Reset.

Figure 8-3 illustrates the **VBUS_DET** circuit. In a typical use case, **VBUS_DET** thresholds are programmed to track the following voltage ranges as defined in Table 8-7.

Note: Table 8-7 illustrates the values of **VBUS_DET** utilizing ±1% accurate resistors where R1 is 10K Ohms and R2 is 90 kOhms.

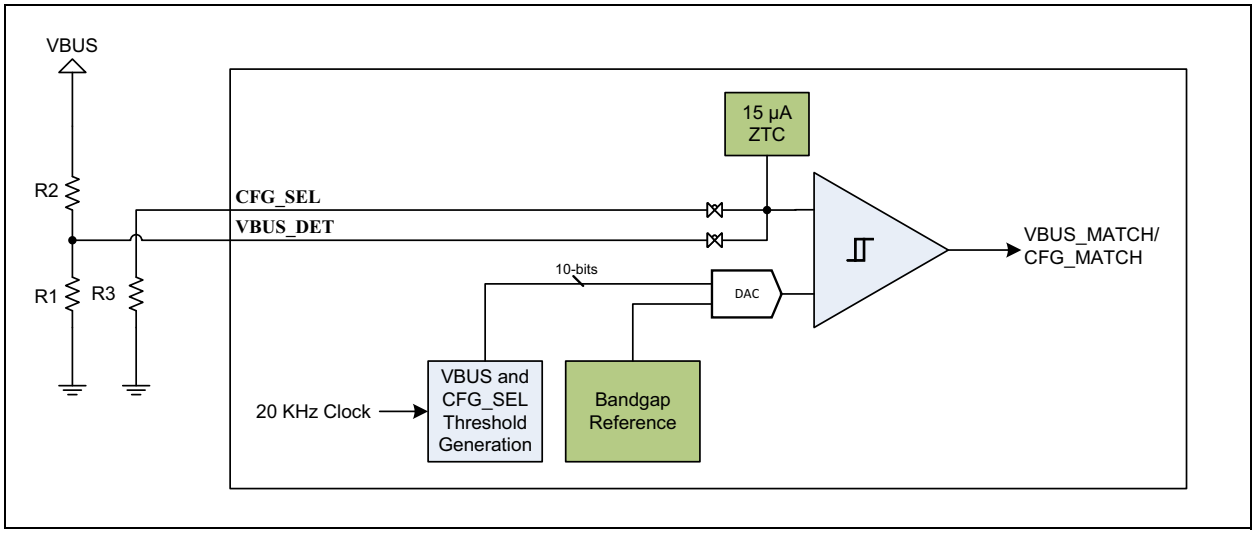

FIGURE 8-3: *VBUS_DET Comparator.*

For a DFP, the VBUS comparator is useful to detect when VBUS is within the desired range per PD negotiations. This is the case when VBUS is generated by a source external to the device.

For a UFP, the VBUS comparator is required to determine when a DFP is attached or detached. It may also use the comparator to determine when VBUS is within a new voltage range negotiated via PD.

TABLE 8-7: VBUS DETECTION THRESHOLDS

VBUS	Range	VBUS_DET	Comments
20	21.5	2.11	
	18.5	1.82	
12	13.1	1.29	
	10.9	1.07	
8	8.9	0.88	
	7.1	0.69	
5	5.5	0.51	vSafe5V
	3.67	0.33	
0.68	0.68	0.068	vSafe0V

If supported, the ranges 8V, 12V and 20V may be programmed in VBUS Threshold 2 and VBUS Threshold 3 registers (see VBUS Threshold x Registers (VBUS_THRx)). Likewise the 5V range, vSafe5v, can be programmed in VBUS Threshold 0 and VBUS Threshold 1 registers.

The threshold for vSafe0V is programmable via the VBUS VSafe0V Threshold Register (VSAFE0V_THR).

VBUS_DET monitoring logic operates off of the 20 KHz oscillator, which cycles through each threshold. Including vSafe0V, a total of five values are compared.

Results of the comparison adjust the respective bits of the VBUS Match Register (VBUS_MATCH) and VBUS Change Status Register (VBUS_CHG_STS) after a debounce period defined in VBUS Debounce Register (VBUS_DEB).

The VBUS Match Register (VBUS_MATCH) indicates when the value on **VBUS_DET** is higher than the corresponding programmed threshold and can therefore be used to determine if **VBUS** is in the desired range.

A change in the state of the VBUS Match Register (VBUS_MATCH) may trigger assertion of the **IRQ_N** pin if appropriately configured in the Power Interrupt Status Register (PWR_INT_STS).

The VBUS Debounce Clear Enable Register (VBUS_DBCLR_EN) is functionality equivalent to the CCx Debounce Clear Enable Registers (CCx_DBCLR_EN), but it applies to the VBUS debouncer. Software programs the VBUS Debounce Clear Enable Register (VBUS_DBCLR_EN) as required to enable debouncing the thresholds of interest.

The following example illustrates the programming model when it is desired to move **VBUS** from 5V to 20V after PD contract negotiation. Initially, the **VBUS** de-

© 2024 Microchip Technology Inc. and its subsidiaries

bouncer is enabled and VSafe5v, VBUS_THR0 and VBUS_THR1, are sampled. VBUS_THR2 and VBUS_THR3 have an initial value in excess of 5V, such as 25V. See Section 8.11.24 for details on the VBUS_THRx registers.

1. Software programs the VBUS Match Enable Register (VBUS_MATCH_EN) to include new thresholds (VBUS_THR2 and VBUS_THR3).
2. Software programs the VBUS Debounce Clear Enable Register (VBUS_DBCLR_EN) as required to enable per threshold debouncing.
3. Software programs new thresholds for 20V in VBUS_THR2 and VBUS_THR3 (e.g. 18.5V and 21.5V). This operation restarts the VBUS debouncer.
4. Software waits until **IRQ_N** asserts.
5. Software confirms the VBUS_MATCH_VLD bit is set.
6. Software reads the VBUS Match Register (VBUS_MATCH) and VBUS Change Status Register (VBUS_CHG_STS).
7. If VBUS Change Status Register (VBUS_CHG_STS) is non-zero, software clears the status bits.

Note: If no bits are set in the VBUS Match Register (VBUS_MATCH), after VBUS_MATCH_VLD asserts, then the voltage observed on **VBUS** is less than VSafe0V.

8. Future changes in **VBUS** will result in **IRQ_N** being asserted, with VBUS Match Register (VBUS_MATCH) and VBUS Change Status Register (VBUS_CHG_STS) being appropriately updated.

8.9.1 CONFIGURATION SELECTION

The **CFG_SEL** pin shares the comparator with **VBUS** as shown in Figure 8-3. The **CFG_SEL** pin is connected to a resistor divider, typically pulled up to VDDIO. After a system level Reset (POR, **RESET_N**, Software Reset), the **CFG_SEL** pin is automatically sampled to configure the device. The internal CFG_SEL_MATCH register CFG_SELx Match Registers (CFG_SELx_MATCH) is updated automatically. The various resistor settings for the **CFG_SEL** pin are detailed in Table 8-8.

TABLE 8-8: CONFIGURATION SELECTION (CFG_SEL) RESISTOR SETTINGS

Resistor (±1%)	CFG_SEL1_MATCH Register
GND	0000h
0.475 K	0001h
0.953 K	0003h
1.43 K	0007h
1.87 K	000Fh
2.37 K	001Fh
2.87 K	003Fh
3.32 K	007Fh
3.83 K	00FFh
4.22 K	01FFh
4.75 K	03FFh
5.23 K	07FFh
5.62 K	0FFFh
6.19 K	1FFFh
6.65 K	3FFFh
7.15 K	7FFFh
>7.15 K	FFFFh

Note: For additional information on device Resets, refer to Section 6.6, "Reset Operation," on page 21. The **CFG_SEL** pin can be used for customer specific purposes to provide a discrete value (0-15) based upon the attached resistor value.

8.10 Back-Drive Detection

Back-drive detection is implemented on both CC pins, which prevents backwards current flow. The back-drive protection circuit is always operational and triggers when VCCx > VS.

Detection of the back-drive condition causes the CC1 or CC2 Back-Drive Error interrupt to assert.

Hardware supports automatically disabling a VCONN FET on a CC pin in which back-drive was detected after a specified debounce period.

© 2024 Microchip Technology Inc. and its subsidiaries

8.11 Cable Orientation and Detection Registers

This section details the cable plug orientation and detection registers. For an overview of the entire device register map, refer to Section 4.0, "Register Map," on page 13.

TABLE 8-9: SYSTEM CONTROL AND STATUS REGISTERS MAP

Address	Register Name (Symbol)
0800h	CC Hardware Control Register (CC_HW_CTL)
0803h	CC Interrupt Status Register (CC_INT_STS)
0804h	CCx Change Status Registers (CCx_CHG_STS) x=1
0805h	CCx Change Status Registers (CCx_CHG_STS) x=2
0806h	CCx Match Registers (CCx_MATCH) x=1
0807h	CCx Match Registers (CCx_MATCH) x=2
0808h	VBUS Match Register (VBUS_MATCH)
0809h	VBUS Change Status Register (VBUS_CHG_STS)
080Ah	Power Interrupt Status Register (PWR_INT_STS)
080Bh	Debug Interrupt Status Register (DBG_INT_STS)
080Ch – 0810h	Reserved for future expansion
0811h	CC Interrupt Enable Register (CC_INT_EN)
0812h	CCx Match Enable Registers (CCx_MATCH_EN) x=1
0813h	CCx Match Enable Registers (CCx_MATCH_EN) x=2
0814h	VBUS Match Enable Register (VBUS_MATCH_EN)
0815h	Power Interrupt Enable Register (PWR_INT_EN)
0816h	Debug Interrupt Enable Register (DBG_ENT_EN)
0817h	Match Debounce Register (MATCH_DEB)
0818h	PD Debounce Register (PD_DEB)
0819h	VCONN OCS and Back-Drive Debounce Register (VCONN_DEB)
081Ah	CCx Debounce Clear Enable Registers (CCx_DBCLR_EN) x=1
081Bh	CCx Debounce Clear Enable Registers (CCx_DBCLR_EN) x=2
081Ch	VBUS Debounce Clear Enable Register (VBUS_DBCLR_EN)
081Dh	CCx Sample Enable Registers (CCx_SAMP_EN) x=1
081Eh	CCx Sample Enable Registers (CCx_SAMP_EN) x=2
081Fh	Reserved for future expansion
0820h	CC Control Register (CC_CTL)
0822h	CC Threshold x Registers (CC_THRx) x=0
0824h	CC Threshold x Registers (CC_THRx) x=1
0826h	CC Threshold x Registers (CC_THRx) x=2
0828h	CC Threshold x Registers (CC_THRx) x=3
082Ah	CC Threshold x Registers (CC_THRx) x=4
082Ch	CC Threshold x Registers (CC_THRx) x=5
082Eh	CC Threshold x Registers (CC_THRx) x=6
0830h	CC Threshold x Registers (CC_THRx) x=7
0832h	CC Debounce Register (CC_DEB)
0834h – 083Fh	Reserved for future expansion
0840h	VBUS Control Register (VBUS_CTL)
0842h	VBUS Threshold x Registers (VBUS_THRx) x=0

© 2024 Microchip Technology Inc. and its subsidiaries

TABLE 8-9: SYSTEM CONTROL AND STATUS REGISTERS MAP (CONTINUED)

Address	Register Name (Symbol)
0844h	VBUS Threshold x Registers (VBUS_THRx) x=1
0846h	VBUS Threshold x Registers (VBUS_THRx) x=2
0848h	VBUS Threshold x Registers (VBUS_THRx) x=3
084Ah	VBUS Debounce Register (VBUS_DEB)
084Bh	VBUS Off Register (VBUS_OFF)
084Ch	VBUS Error Register (VBUS_ERR)
084Dh	Reserved for future expansion
084Eh	VBUS VSafe0V Threshold Register (VSAFE0V_THR)
0850h	CFG_SELx Match Registers (CFG_SELx_MATCH) x=0
0852h	CFG_SELx Match Registers (CFG_SELx_MATCH) x=1
0854h	CFG_SEL Threshold x Registers (CFG_SEL_THRx) x=0
0856h	CFG_SEL Threshold x Registers (CFG_SEL_THRx) x=1
0858h	CFG_SEL Threshold x Registers (CFG_SEL_THRx) x=2
085Ah	CFG_SEL Threshold x Registers (CFG_SEL_THRx) x=3
085Ch	CFG_SEL Threshold x Registers (CFG_SEL_THRx) x=4
085Eh	CFG_SEL Threshold x Registers (CFG_SEL_THRx) x=5
0860h	CFG_SEL Threshold x Registers (CFG_SEL_THRx) x=6
0862h	CFG_SEL Threshold x Registers (CFG_SEL_THRx) x=7
0864h	CFG_SEL Threshold x Registers (CFG_SEL_THRx) x=8
0866h	CFG_SEL Threshold x Registers (CFG_SEL_THRx) x=9
0868h	CFG_SEL Threshold x Registers (CFG_SEL_THRx) x=10
086Ah	CFG_SEL Threshold x Registers (CFG_SEL_THRx) x=11
086Ch	CFG_SEL Threshold x Registers (CFG_SEL_THRx) x=12
086Eh	CFG_SEL Threshold x Registers (CFG_SEL_THRx) x=13
0870h	CFG_SEL Threshold x Registers (CFG_SEL_THRx) x=14
0872h	CFG_SEL Threshold x Registers (CFG_SEL_THRx) x=15
0874h	CFG_SEL Debug Register (CFG_SEL_DBG)
0875h – 0885h	Reserved for future expansion
0886h	VCONN Discharge Threshold Register (VCONN_DIS_THR)
0888h	VCONN Discharge Time Register (VCONN_DIS_TIME)
088Ah – 088Fh	Reserved for future expansion
0890h	DRP Control Register (DRP_CTL)
0892h	DRP LFSR Register (DRP_LFSR_SEED)
0894h	DRP Time Register (DRP_TIME)
0896h	DRP LFSR Debug Register (DRP_LFSR_DBG)
0898h	DRP CC Sink Match Enable Register (DRP_CC_SINK_MATCH_EN)
0899h	DRP Source Match Enable Register (DRP_CC_SRC_MATCH_EN)
089Ah	DRP Sink Debounce Clear Enable Register (DRP_CC_SNK_DBCLR_EN)
089Bh	DRP Source Debounce Clear Enable Register (DRP_CC_SRC_DBCLR_EN)
089Ch	DRP Duty Cycle Register (DRP_DUTY_CYC)
089Dh	DRP Sink Sample Enable Register (DRP_SNK_SAMP_EN)
089Eh	DRP Source Sample Enable Register (DRP_SRC_SAMP_EN)
089Fh	Reserved for future expansion
08A0h	FRS Control Register (FRS_CTL)

© 2024 Microchip Technology Inc. and its subsidiaries

TABLE 8-9: SYSTEM CONTROL AND STATUS REGISTERS MAP (CONTINUED)

Address	Register Name (Symbol)
08A2h	FRS CC Debounce Register (FRS_CC_DEB)
08A4h	FRS Transmission Length Register (FRS_TX_LEN)
08A6h	FRS Threshold Select Register (FRS_THR_SEL)
08A7h	FRS PIO Selection Register (FRS_PIO_SEL)
08A8h	FRS VBUS Debounce Register (FRS_VBUS_DEB)
08A9h – 08AFh	Reserved for future expansion
08B0h	VBUS Threshold x Registers (VBUS_THRx) x=0
08B2h	VBUS Threshold x Registers (VBUS_THRx) x=1
08B4h	VBUS Threshold x Registers (VBUS_THRx) x=2
08B6h	VBUS Threshold x Registers (VBUS_THRx) x=3
08B8h	VBUS Threshold x Registers (VBUS_THRx) x=4
08BAh – 0BFFh	Reserved for future expansion

Note: RESERVED address space must not be written under any circumstances. Failure to heed this warning may result in untoward operation and unexpected results.

8.11.1 CC HARDWARE CONTROL REGISTER (CC_HW_CTL)

Address: 0800h Size: 16 bits

Bits	Description	Type	Default
15:13	**RESERVED**	RO	-
12	**BLK_PD_MSG** This bit causes the CC debouncer to pause whenever a PD message is detected by the MAC. This applies for both transmit and receive messages. 0b: Disable PD message filtering. 1b: Enable PD message filtering. **Note:** This must be enabled for collision detection.	R/W	0b
11	**MATCH_DB_UNITS** This bit defines the units of the Match Debounce Register (MATCH_DEB). 0b: Match debounce has units of 1.6 ms. 1b: Match debounce has units of 100 us. **Note:** 1.6 ms is derived from the time to cycle through all thresholds on both CC pins.	R/W	0b
10	**RESERVED**	RO	0b
9	**CC_DB_ACTIVE** When this bit reads back 0b, the debouncer is disabled. The CC debouncer is enabled when it reads back 1b. **Note:** Software may poll this bit to determine when the CC debouncer is disabled, which can be used as a condition for programming a new configuration.	RO	0b

© 2024 Microchip Technology Inc. and its subsidiaries

Bits	Description	Type	Default
8	**DEVICE_STATE** Indicates the current state of the device attachment. 0b: Device is not attached 1b: Device is attached	RO	0b
7:0	**RESERVED**	R/W	-

8.11.2 CC INTERRUPT STATUS REGISTER (CC_INT_STS)

Address: 0803h Size: 16 bits

Bits	Description	Type	Default
7	**CC_MATCH_VLD** Asserts after the CC debouncer is first enabled via CC Comparator Control, and the first match becomes valid in CCx Match Registers (CCx_MATCH).	R/WC	0b
6:2	**RESERVED**	RO	-
1	**CC2_MATCH_CHG** Indicates that a change occurred in the state of the respective CCx Change Status Registers (CCx_CHG_STS). **Note:** The source of this input is a pulse and does not persist after being cleared.	RO	0b
0	**CC1_MATCH_CHG** Indicates that a change occurred in the state of the respective CCx Change Status Registers (CCx_CHG_STS). **Note:** The source of this input is a pulse and does not persist after being cleared.	RO	0b

8.11.3 CC*X* CHANGE STATUS REGISTERS (CC*X*_CHG_STS)

Address: x=1: 0804h x=2: 0805h Size: 8 bits

Bits	Description	Type	Default
7:0	**CCx Change Status** When set, each bit indicates that the respective bit in the CCx Match Registers (CCx_MATCH) has changed. A write of 1b clears the respective status bit.	R/WC	0h

© 2024 Microchip Technology Inc. and its subsidiaries

8.11.4 CC*X* MATCH REGISTERS (CC*X*_MATCH)

Address: x=1: 0806h x=2: 0807h Size: 8 bits

Bits	Description	Type	Default
7:0	**CCx Threshold Match (CCx_MATCH)** When set, each bit indicates that the respective threshold programmed in the CC Threshold x Registers (CC_THRx) was matched. A match is determined when the measured voltage exceeds the programmed threshold. These registers are updated after the Match Debounce Register (MATCH_DEB) while in the Unattached state. While in AttachWait state, these registers are updated after the PD Debounce Register (PD_DEB) if vOpen is seen for a time greater than in the PD Debounce Register (PD_DEB). While in Attached Source / Attached Sink states (e.g. detecting detach), the match registers are updated after the PD Debounce Register (PD_DEB). **Note:** This register will always read the default value until the CC comparator is enabled. **Note:** The contents of this register are debounced per the settings in the CCx Debounce Clear Enable Registers (CCx_DBCLR_EN), otherwise the raw value shall be shown.	RO	-

8.11.5 VBUS MATCH REGISTER (VBUS_MATCH)

Address: 0808h Size: 8 bits

Indicates which VBUS thresholds are matched on **VBUS_DET** pin. A match is determined when the measured voltage exceeds the programmed threshold.

Note: This register will always read 0h until the VBUS comparator is enabled.

Note: The contents of this register shall be debounced per the settings in VBUS Debounce Clear Enable Register (VBUS_DBCLR_EN).

Bits	Description	Type	Default
7:6	**RESERVED**	RO	-
5	**VBUS Threshold 3 Match (VBUS3_THR_MATCH)**	RO	0b
4	**VBUS Threshold 2 Match (VBUS2_THR_MATCH)**	RO	0b
3	**VBUS Threshold 1 Match (VBUS1_THR_MATCH)**	RO	0b
2	**VBUS Threshold 0 Match (VBUS0_THR_MATCH)**	RO	0b
1	**RESERVED**	RO	-
0	**VBUS VSafe0V Match (VSAFE0V_THR_MATCH)**	RO	0b

© 2024 Microchip Technology Inc. and its subsidiaries

8.11.6 VBUS CHANGE STATUS REGISTER (VBUS_CHG_STS)

Address: 0809h Size: 8 bits

Bits	Description	Type	Default
7:0	**VBUS Change Status (VBUS_CHG_STS)** When set, each bit indicates that the respective bit in VBUS Match Register (VBUS_MATCH) has changed. A write of 1b clears the respective status bit.	R/WC	0h

8.11.7 POWER INTERRUPT STATUS REGISTER (PWR_INT_STS)

Address: 080Ah Size: 8 bits

Bits	Description	Type	Default
7	**VBUS_MATCH_VLD** Asserts after the VBUS debouncer is first enabled via VBUS Comparator Control and the first match becomes valid in VBUS Match Register (VBUS_MATCH).	R/WC	0b
6	**RESERVED**	R/WC	0b
5	**CC2 Back-Drive Error** When set, indicates that back-drive has been detected on the CC2 pin. **Note:** The source of this input is a level and persists until the error condition stops.	R/WC	0b
4	**VBUS Discharge Error** When set, indicates that an interval greater than defined in the VBUS Off Register (VBUS_OFF) has elapsed while attempting to discharge VBUS. **Note:** The source of this input is a pulse and does not persist after being cleared.	R/WC	0b
3	**VCONN2 FET Power** The integrated VCONN2 FET is enabled and providing power. This bit only has usefulness where VCONN is explicitly enabled by the host. **Note:** The source of this input is a level and persists until the VCONN is no longer present.	R/WC	0b
2	**VCONN1 FET Power** The integrated VCONN1 FET is enabled and providing power. This bit only has usefulness where VCONN is explicitly enabled by the host. **Note:** The source of this input is a level and persists until the VCONN is no longer present.	R/WC	0b
1	**CC1 Back-Drive Error** When set, indicates that back-drive has been detected on the CC1 pin. **Note:** The source of this input is a level and persists until the error condition stops.	R/WC	0b

© 2024 Microchip Technology Inc. and its subsidiaries

Bits	Description	Type	Default
0	**VCONN Over-Current Error** Indicates an overcurrent has been detected on the integrated VCONN FET. **Note:** The source of this input is a level and persists until the error condition stops.	R/WC	0b

8.11.8 DEBUG INTERRUPT STATUS REGISTER (DBG_INT_STS)

Address: 080Bh Size: 8 bits

Bits	Description	Type	Default
7:3	**RESERVED**	-	0h
2	**VBUS_DISCH** When set, indicates that VBUS is being discharged. **Note:** The source of this input is a level and it persists until the discharge has completed.	R/WC	0b
1	**RESERVED**	-	0b
0	**CFG_SEL Done** When set, indicates that all CFG_SEL Threshold x Registers (CFG_SEL_THRx) have been measured in response to the request enabled by VBUS Comparator Control to sample the CFG_SEL pin and the results are readable in the respective CFG_SELx Match Registers (CFG_SELx_MATCH). **Note:** The source of this input is a pulse and does not persist after being cleared.	R/WC	0b

8.11.9 CC INTERRUPT ENABLE REGISTER (CC_INT_EN)

Address: 0811h Size: 8 bits

Bits	Description	Type	Default
7:4	**CC Interrupt Enable** When “0”, prevents generation of the respective interrupt.	R/W	0000b
3:2	**RESERVED**	-	00b
1:0	**CC Interrupt Enable** When “0”, prevents generation of the respective interrupt.	R/W	00b

© 2024 Microchip Technology Inc. and its subsidiaries

8.11.10 CC*X* MATCH ENABLE REGISTERS (CC*X*_MATCH_EN)

Address: x=1: 0812h, x=2: 0813h Size: 8 bits

Bits	Description	Type	Default
7:0	**CCx Match Enable** When set, the corresponding bit in the CCx Change Status Registers (CCx-_CHG_STS) can cause the assertion of the respective CCx Match Change interrupt (CC1_MATCH_CHG/CC2_MATCH_CHG).	R/W	00h

8.11.11 VBUS MATCH ENABLE REGISTER (VBUS_MATCH_EN)

Address: 0814h Size: 8 bits

When set, the corresponding bit in the VBUS Change Status Register (VBUS_CHG_STS) can cause the assertion of the VBUS_INT interrupt.

Bits	Description	Type	Default
7:6	**RESERVED**	RO	-
5	**VBUS Match Enable[5]**	R/W	0b
4	**VBUS Match Enable[4]**	R/W	0b
3	**VBUS Match Enable[3]**	R/W	0b
2	**VBUS Match Enable[2]**	R/W	0b
1	**VBUS Match Enable[1]**	RO	0b
0	**VBUS Match Enable[0]**	R/W	0b

8.11.12 POWER INTERRUPT ENABLE REGISTER (PWR_INT_EN)

Address: 0815h Size: 8 bits

Bits	Description	Type	Default
7:0	**Power Interrupt Enable [7:0]** When “0”, prevents generation of the respective interrupt.	R/W	0h

© 2024 Microchip Technology Inc. and its subsidiaries

8.11.13 DEBUG INTERRUPT ENABLE REGISTER (DBG_ENT_EN)

Address: 0816h Size: 8 bits

Bits	Description	Type	Default
7:3	**RESERVED**	-	0h
2:0	**Debug Interrupt Enable [2:0]** When “0”, prevents generation of the respective interrupt.	R/W	0h

8.11.14 MATCH DEBOUNCE REGISTER (MATCH_DEB)

Address: 0817h Size: 8 bits

Bits	Description	Type	Default
7:0	**Match Debounce** Defines the debounce period utilized before updating the CCx Match Registers (CCx_MATCH). The units of this register are determined by the MATCH_DB_UNITS bit in CC Hardware Control Register (CC_HW_CTL). When this bit is clear, the units are 1.6 ms. When this bit is set, the units are 100 us. **Note:** This register must not be modified while the CC debouncer is enabled. **Note:** The actual debounce time may be +/-1 from the cycle time programmed. **Note:** The value programmed in this CSR should be at least equal to the number of thresholds enabled in CCx Sample Enable Registers (CCx_SAMP_EN). This is only an issue when MATCH_DB_UNITS is set to 1b.	R/W	2h

8.11.15 PD DEBOUNCE REGISTER (PD_DEB)

Address: 0818h Size: 8 bits

Bits	Description	Type	Default
7:0	**PD Debounce (PD_DEB)** Period used for implementing $t_{PdDebounce}$. **Note:** This register must not be modified while the CC debouncer is enabled. **Note:** This register has units of 1 ms.	R/W	Ah

© 2024 Microchip Technology Inc. and its subsidiaries

8.11.16 VCONN OCS AND BACK-DRIVE DEBOUNCE REGISTER (VCONN_DEB)

Address: 0819h Size: 8 bits

Bits	Description	Type	Default
7:0	**VCONN and Back-Drive Debounce (VCONN_DEB)** Period used for implementing debounce of overcurrent detected on VCONN FET, as well as for the back-drive detected on the CC pins. **Note:** This register has units of 1 ms. **Note:** This register should not be changed when VCONN OCS Enable is set.	R/W	2h

8.11.17 CC*X* DEBOUNCE CLEAR ENABLE REGISTERS (CC*X*_DBCLR_EN)

Address: x=1: 081Ah x=2: 081Bh Size: 8 bits

Bits	Description	Type	Default
7:0	**CC Debounce Clear Enable (CC_DBCLR_DEB)** When a bit is set, the respective threshold shall be included in the CC debouncer. Alternatively, when cleared the respective threshold shall no longer be considered by the debouncer. When CCx_DBCLR_EN bits are set on-the-fly, if a mismatch between the current raw match vector (for the new CCx_DBCLR_EN) and the previous raw match vector (for the old CCx_DBCLR_EN) exists, the DB will be reset. **Note:** Clearing bits in this register at run-time does not reset the debouncer. **Note:** The CC debouncer encompasses both **CC1/CC2** pins. A detected change for a threshold on either pin results in the debouncer resetting. **Note:** Even though this register may change on-the-fly, the internal logic will enable the change only at the end of the scan cycle. This is a function of whether the **CC1/CC2** pins are actively sampled and of the CCx Sample Enable Registers (CCx_SAMP_EN).	R/W	0

APPLICATION NOTE: Clearing a bit in CCx Debounce Clear Enable Registers (CCx_DBCLR_EN) shall cause the respective bit in CCx Match Registers (CCx_MATCH) to be immediately updated upon a change in state of the associated threshold. This causes a state change in CCx Change Status Registers (CCx_CHG_STS) and assertion of CC_INT, if enabled. To prevent this, the CCx Match Enable Registers (CCx_MATCH_EN) should be updated before the CCx Debounce Clear Enable Registers (CCx_DBCLR_EN) by having the associated threshold cleared.

© 2024 Microchip Technology Inc. and its subsidiaries

8.11.18 VBUS DEBOUNCE CLEAR ENABLE REGISTER (VBUS_DBCLR_EN)

Address: 081Ch Size: 8 bits

When a bit is set, the respective threshold shall be included in the VBUS debouncer. Alternatively, when cleared, the respective threshold shall no longer be considered by the debouncer.

When VBUS_DBCLR_EN bits are set on-the-fly, if a mismatch between the current raw match vector (for the new VBUS_DBCLR_EN) and the previous raw match vector (for the old VBUS_DBCLR_EN) exists, the DB will be reset.

Note: Clearing bits in this register at run-time does not reset the debouncer.

APPLICATION NOTE: Clearing a bit in VBUS Debounce Clear Enable Register (VBUS_DBCLR_EN) shall cause the respective bit in VBUS Match Register (VBUS_MATCH) to be immediately updated upon a change in state of the associated threshold. This causes a state change in VBUS Change Status Register (VBUS_CHG_STS) and assertion of VBUS_INT, if enabled. To prevent this, the VBUS Match Register (VBUS_MATCH) should be updated before the VBUS Debounce Clear Enable Register (VBUS_DBCLR_EN) by having the associated threshold cleared.

BITS	DESCRIPTION	TYPE	DEFAULT
7:6	**RESERVED**	RO	-
5	**VBUS Debounce Clear Enable (VBUS3_DBCLR_DEB)**	R/W	0
4	**VBUS Debounce Clear Enable (VBUS2_DBCLR_DEB)**	R/W	0
3	**VBUS Debounce Clear Enable (VBUS1_DBCLR_DEB)**	R/W	0
2	**VBUS Debounce Clear Enable (VBUS0_DBCLR_DEB)**	R/W	0
1	**RESERVED**	RO	-
0	**VSAFE0V Debounce Clear Enable 9 (VSAFE0V_DBCLR_DEB)**	R/W	0

8.11.19 CC*X* SAMPLE ENABLE REGISTERS (CC*X*_SAMP_EN)

Address: x=1: 081Dh Size: 8 bits
x=2: 081Eh

BITS	DESCRIPTION	TYPE	DEFAULT
7:0	**CC Sample Enable (CC_SAMP_EN)** When a bit is set, the respective CC threshold will be sampled by the CC debouncer. When a bit cleared to 0b, the corresponding bit(s) in the CCx Match Registers (CCx_MATCH) and CCx Change Status Registers (CCx_CHG_STS) will always read 0b. This register enables a reduction in latency for taking threshold measurements by only having thresholds of interest being sampled. **Note:** This register must be used to implement Collision Avoidance.	R/W	FFh

© 2024 Microchip Technology Inc. and its subsidiaries

8.11.20 CC CONTROL REGISTER (CC_CTL)

Address: 0820h Size: 16 bits

The register controls the pull-down resistors and current sources on the respective **CC1/CC2** pin.

Bits	Description	Type	Default
15	**RA Detect** When set, indicates that an RA resistor has been detected.	R/WC	0b
14:13	**CC Comparator Control** 00b: CC Comparator and DAC powered-down 01b: CC Comparator samples **CC1** 10b: CC Comparator samples **CC2** 11b: CC Comparator samples **CC1** and **CC2** **Note:** A sample is taken every 100 us. The current source reference shall also be powered down when a value of 00b is set. **Note:** This field is used in conjunction with the CCx Sample Enable Registers (CCx_SAMP_EN), which constrains the number of thresholds monitored on the enabled CC pin(s).	R/W	00b
12	**CC Communication Select** 0b: **CC1** is used for baseband communication. 1b: **CC2** is used for baseband communication.	RO	0b
11:10	**CC2 RP Value** 00b: RP current source disabled 01b: RP current source enabled, default USB power 10b: RP current source enabled, 1.5A 11b: RP current source enabled, 3.0A Controls RP value on **CC2** pin.	R/W	00b
9:8	**CC1 RP Value** 00b: RP current source disabled 01b: RP current source enabled, default USB power 10b: RP current source enabled, 1.5A 11b: RP current source enabled, 3.0A Controls RP value on **CC1** pin.	R/W	00b
7:5	**RESERVED**	RO	-
4:3	**CC2 Pull-Down Value** 00b: Dead battery RD resistor selected 01b: Trimmed RD resistor selected 10b: Trimmed RA resistor selected. 11b: Open Disconnect.	R/W	00b
2	**RESERVED**	RO	-
1:0	**CC1 Pull-Down Value** 00b: Dead battery RD resistor selected 01b: Trimmed RD resistor selected 10b: Trimmed RA resistor selected. 11b: Open Disconnect.	R/W	00b

© 2024 Microchip Technology Inc. and its subsidiaries

8.11.21 CC THRESHOLD *X* REGISTERS (CC_THR*X*)

Address: x=0: 0822h, x=1: 0824h, x=2: 0826h, x=3: 0828h, x=4: 082Ah, x=5: 082Ch, x=6: 082Eh, x=7: 0830h — Size: 16 bits

Bits	Description	Type	Default
15:10	**RESERVED**	RO	-
9:0	**CC Threshold X (CC_THRX)** CC Threshold X register. **Note:** The units of this register are ~2.44 mV from a 2.5V/1024. **Note:** This register must not be modified while the CC debouncer is enabled.	R/W	Note 1

Note 1: Defaults values are loaded from OTP. If the OTP is not configured, the default varies as shown in Table 8-10.

TABLE 8-10: CC_THR DEFAULTS

CC_THR	Type-C Threshold	R/2R Divider	VALUE
0	0.2	0.13	55
1	0.4	0.27	109
2	0.66	0.44	180
3	0.8	0.53	219
4	1.23	0.82	336
5	1.6	1.07	437
6	2.6	1.73	710
7	3	2	820

APPLICATION NOTE: The CC Comparator must be powered down before updating these registers.

8.11.22 CC DEBOUNCE REGISTER (CC_DEB)

Address: 0832h — Size: 8 bits

Bits	Description	Type	Default
7:0	**CC Debounce (CC_DEB)** Period used for implementing $t_{CCDebounce}$. **Note:** This register must not be modified while the CC debouncer is enabled. **Note:** This register has units of 10 ms.	R/W	Fh

© 2024 Microchip Technology Inc. and its subsidiaries

8.11.23 VBUS CONTROL REGISTER (VBUS_CTL)

Address: 0840h Size: 16 bits

Bits	Description	Type	Default
15:12	**RESERVED**	RO	-
11	**CC Back-Drive Enable** Enables the monitoring of the back-drive condition on both CC pins. When back-drive is detected, if the VCONN FET is enabled on the erred CC pin, it shall be automatically disabled. 0b: CC Back-Drive disabled 1b: CC Back-Drive enabled	R/W	0
10:8	**RESERVED**	R/W	00b
7	**VBUS_DB_ACTIVE** When this bit reads back 0b, the debouncer is disabled. The VBUS debouncer is enabled when it reads back 1b. **Note:** Firmware polls this bit to determine when the debouncer is disabled and a new configuration may be programmed.	RO	0b
6	**VCONN OCS Enable** Enables the monitoring of over current condition on the internal VCONN FETs. 0b: VCONN OCS monitor is disabled 1b: VCONN OCS monitor is enabled	R/W	0
5:4	**RESERVED**	R/W	00b
3	**VCONN2 Control** Enables the VCONN2 FET. 0b: VCONN2 FET is disabled 1b: VCONN2 FET is enabled This bit automatically clears when a debounce VCONN OCS event occurs.	R/W	0b
2	**VCONN1 Control** Enables the VCONN1 FET. 0b: VCONN1 FET is disabled 1b: VCONN1 FET is enabled This bit automatically clears when a debounce VCONN OCS event occurs.	R/W	0b
1:0	**VBUS Comparator Control** 00b: Comparator and DAC disabled 01b: Sample VBUS 10b: Sample **CFG_SEL** 11b: RESERVED After the sample of **CFG_SEL** has completed, this register resets itself to 00b and disables the VBUS comparator.	Note 1	00b

Note 1: This value does not indicate that VBUS is being actively measured. Whether or not VBUS is being actively measured can be determined by reading VBUS_DB_ACTIVE.

© 2024 Microchip Technology Inc. and its subsidiaries

8.11.24 VBUS THRESHOLD *X* REGISTERS (VBUS_THR*X*)

Address: x=0: 0842h, x=1: 0844h, x=2: 0846h, x=3: 0848h — Size: 16 bits

Bits	Description	Type	Default
15:10	**RESERVED**	RO	-
9:0	**VBUS Threshold X (VBUS_THRX)** VBUS Threshold X register. The lower byte of the threshold must be written before the upper byte. The entire 10-bit threshold is updated when the second write occurs. **Note:** The units of this register are ~2.44 mV from a 2.5V FS.	R/W	Note 1

Note 1: Default values are loaded from OTP. If the OTP is not configured, the defaults are defined in Table 8-11.

TABLE 8-11: VBUS_THR DEFAULTS

VBUS_THR	VBUS Threshold	1R/9R Divider	VALUE
0	3.67	0.36	148
1	5.5	0.54	222
2	5.5	0.54	222
3	5.5	0.54	222

APPLICATION NOTE: This register may be dynamically written to by FW while the VBUS comparator is enabled, provided the rules for updating defined in the CSR description are followed.

8.11.25 VBUS DEBOUNCE REGISTER (VBUS_DEB)

Address: 084Ah — Size: 8 bits

This register has units of 1 ms.

Bits	Description	Type	Default
7:0	**VBUS Debounce (VBUS_DEB)** Indicates debounce interval for the VBUS threshold comparators. **Note:** This register must not be modified while the VBUS debouncer is enabled.	R/W	1h

8.11.26 VBUS OFF REGISTER (VBUS_OFF)

Address: 084Bh — Size: 8 bits

This register has units of 10 ms.

Bits	Description	Type	Default
7:0	**VBUS Off** Defines timing after **VBUS_DET** discharges below VSafe0V.	R/W	10h

Note 1: Default is loaded from OTP, see VBUS_OFF. If OTP is not configured, the default is 10h.

© 2024 Microchip Technology Inc. and its subsidiaries

8.11.27 VBUS ERROR REGISTER (VBUS_ERR)

Address: 084Ch Size: 8 bits

Bits	Description	Type	Default
7:3	**RESERVED**	RO	-
3	**VCONN Discharge** When set, the VBUS Discharge error shall be enabled to place the device in the error state.	R/W	0b
2	**VBUS Discharge** When set, the VBUS Discharge error shall be enabled to place the device in the error state. **Note:** This bit is not applicable when the PPC is selected for VBUS discharge.	R/W	0b
1	**VCONN OCS** When set, the CC OCS error shall be enabled to place the device in the error state.	R/W	0b
0	**CC Back-drive** When set, the CC back-drive error shall be enabled to place the device in the error state.	R/W	0b

8.11.28 VBUS VSAFE0V THRESHOLD REGISTER (VSAFE0V_THR)

Address: 084Eh Size: 16 bits

BITS	DESCRIPTION	TYPE	DEFAULT
15:10	**RESERVED**	RO	-
9:0	**VSAFE0V Threshold (VSAFE0V_THR)** VSAFE0V Threshold register. The lower byte of the threshold must be written before the upper byte. The entire 10-bit threshold is updated when the second write occurs. **Note:** The units of this register are ~2.44 mV from a 2.5V FS.	R/W	Note 1

Note 1: Defaults values are loaded from OTP. If the OTP is not configured, the defaults are defined in Table 8-12.

TABLE 8-12: VSAFE0V_THR DEFAULTS

VSAFE0V_THR	VBUS Threshold	1R/9R Divider	VALUE
VSAFE0V_THR	0.8	0.08	32

APPLICATION NOTE: This register may be dynamically written to by software while the VBUS comparator is enabled, provided the rules for updating defined in the register description are followed.

© 2024 Microchip Technology Inc. and its subsidiaries

8.11.29 CFG_SEL*X* MATCH REGISTERS (CFG_SEL*X*_MATCH)

Address: x=0: 0850h, x=1: 0852h — Size: 16 bits

Bits	Description	Type	Default
15:0	**Configuration Select Match (CFG_SELX_MATCH)** Indicates which configuration select threshold is matched on the **CFG_SEL** pin. A match is determined when the measured voltage exceeds the programmed threshold. See Section 8.9.1, "Configuration Selection," on page 63.	RO	0h

8.11.30 CFG_SEL THRESHOLD *X* REGISTERS (CFG_SEL_THR*X*)

Address: x=0: 0854h, x=1: 0856h, x=2: 0858h, x=3: 085Ah, x=4: 085Ch, x=5: 085Eh, x=6: 0860h, x=7: 0862h, x=8: 0864h, x=9: 0866h, x=10: 0868h, x=11: 086Ah, x=12: 086Ch, x=13: 086Eh, x=14: 0870h, x=15: 0872h — Size: 16 bits

A total of 16 thresholds are supported for decoding the resistor value on the **CFG_SEL** pin.

Bits	Description	Type	Default
15:10	**RESERVED**	RO	-
9:0	**CFG_SEL Threshold (CFG_SEL_THR)** **Note:** The units of this register are ~2.44 mV from a 2.5V FS.	R/W	Note 1

Note 1: Defaults values are loaded from OTP. If the OTP is not configured, defaults are defined in Table 8-13.

TABLE 8-13: CFG_SEL_THR DEFAULTS

CFG_SEL_THR	Default
0	32
1	96
2	160
3	224
4	288
5	352
6	416
7	480
8	544

TABLE 8-13: CFG_SEL_THR DEFAULTS

CFG_SEL_THR	Default
9	608
10	672
11	736
12	800
13	864
14	928
15	992

© 2024 Microchip Technology Inc. and its subsidiaries

8.11.31 CFG_SEL DEBUG REGISTER (CFG_SEL_DBG)

Address: 0874h Size: 8 bits

Bits	Description	Type	Default
7:4	**RESERVED**	RO	-
3:0	**CFG_SEL_VAL** This register stores a snapshot of the highest threshold matched when the device samples the CFG_SEL pin after a system level Reset event.	RO	0h

8.11.32 VCONN DISCHARGE THRESHOLD REGISTER (VCONN_DIS_THR)

Address: 0886h Size: 16 bits

Bits	Description	Type	Default
15:10	**RESERVED**	RO	-
9:0	**VCONN Discharge Threshold (VCONN_DIS_THR)** This register defines the threshold used for discharging VCONN. **Note:** The units of this register are ~2.44 mV from a 2.5V/1024.	R/W	41h Note 1

Note 1: Loaded from OTP. If the OTP is not configured, the default is 41, which equates to 150mV after accounting for the R/2R divider.

8.11.33 VCONN DISCHARGE TIME REGISTER (VCONN_DIS_TIME)

Address: 0888h Size: 16 bits

Bits	Description	Type	Default
7:0	**VCONN Discharge Time (VCONN_DIS_TIME)** Defines the amount of time the CC pin supplying VCONN is discharged. **Note:** The units of this register are 10 ms.	R/W	04h

Note 1: Loaded from OTP. If the OTP is not configured, the default is 04h.

© 2024 Microchip Technology Inc. and its subsidiaries

8.11.34 DRP CONTROL REGISTER (DRP_CTL)

Address: 0890h Size: 16 bits

Bits	Description	Type	Default
15:11	**RESERVED**	RO	-
10	**DRP_VSAFE0V_EN** DRP Vsafe0V Enable. This bit enables checking that VBUS is below vSafe0V during DRP. 0b: VBUS checking is disabled. 1b: VBUS checking is enabled. **Note:** Not setting this bit will cause Type-C specification compliance failures with version 1.2 of the specification.	R/W	0b
9	**Ra Detection Enable (RA_DET_EN)** This bit allows making of Ra/Open and Open/Ra when DRP offload is enabled. 0b: DPR toggle is not halted, DRP_DONE is not asserted from detection of Ra/Open or Open/Ra. 1b: DPR toggle is halted, DRP_DONE is asserted from detection of Ra/Open or Open/Ra.	R/W	0b
8	**DRP State (DRP_STATE)** 0b: DRP is advertising DFP. 1b: DRP is advertising UFP.	RO	0b
7	**DRP Initial State (DRP_INIT)** 0b: DRP period initially advertises DFP. 1b: DRP period initially advertises UFP.	R/W	0b
6:4	**DRP Pull-Down Value (DRP_PD_VAL)** 000b: Dead battery RD resistor selected. 001b: Trimmed RD resistor selected. 010b: Trimmed RA resistor selected. 011b: Open Disconnect. 1xxb: Trimmed FRS resistor.	R/W	000b
3:2	**DRP Current Advertisement (DRP_CUR_ADV)** 00b: RP current source disabled. 01b: RP current advertises default USB current. 10b: RP current advertises 1.5A. 11b: RP current advertises 3.0A.	R/W	00b
1	**LFSR Enable (LFSR_EN)** When set, the LFSR pseudo random number generator is enabled and updates with a 10 kHz frequency.	R/W	0b
0	**DRP Enable (DRP_EN)** When set, DRP offload is enabled.	R/W	0b

© 2024 Microchip Technology Inc. and its subsidiaries

8.11.35 DRP LFSR REGISTER (DRP_LFSR_SEED)

Address: 0892h Size: 16 bits

Bits	Description	Type	Default
15:0	**DRP LFSR Seed (DRP_LFSR_SEED)** Defines the seed to be used by the LFSR pseudo random number generator. The value specified in this register is loaded when the LFSR Enable (LFSR_EN) bit is set.	R/W	Note 1

Note 1: Defaults value is loaded from OTP via UNIQUE_ID[16:1]. If the OTP is not configured, the default is FFFFh.

8.11.36 DRP TIME REGISTER (DRP_TIME)

Address: 0894h Size: 8 bits

Bits	Description	Type	Default
7:0	**DRP Time (DRP_TIME)** Indicates the time currently used for tDRP when DRP offload is enabled. When the LFSR Enable (LFSR_EN) bit is set, the value in this register is updated by HW at the onset of each DRP cycle. If LFSR Enable (LFSR_EN) is not set, then the value in this CSR remains static. **Note:** This register has units of 1 ms. **Note:** In order to comply with the Type-C specification, the value in this register must have a range between 50 ms to 100 ms.	R/W	40h

8.11.37 DRP LFSR DEBUG REGISTER (DRP_LFSR_DBG)

Address: 0896h Size: 16 bits

Bits	Description	Type	Default
15:0	**DRP LFSR Debug (DRP_LFSR_DBG)** Provides the real-time state of the LFSR. The lower byte shall always be read first. Reading of the lower order byte results in a snapshot of the counter taken. This ensures that when the upper bytes are read, the state of the counter remains in sync.	RO	0h

DRP_LFSR_DBG[7:0] = 96h

DRP_LFSR_DBG[15:8] = 97h

© 2024 Microchip Technology Inc. and its subsidiaries

8.11.38 DRP CC SINK MATCH ENABLE REGISTER (DRP_CC_SINK_MATCH_EN)

Address: 0898h Size: 8 bits

Bits	Description	Type	Default
7:0	**DRP CC Sink Match Enable** This field is used when DRP offload is enabled and the device is advertising as a sink. When set, the corresponding bit in CCx Change Status Registers (CCx_CHG_STS) can cause the assertion of the respective CCx Match Change interrupt (CC1_MATCH_CHG/CC2_MATCH_CHG).	R/W	00h

8.11.39 DRP SOURCE MATCH ENABLE REGISTER (DRP_CC_SRC_MATCH_EN)

Address: 0899h Size: 8 bits

Bits	Description	Type	Default
7:0	**DRP CC Source Match Enable** This field is used when DRP offload is enabled and the device is advertising as a source. When set, the corresponding bit in CCx Change Status Registers (CCx_CHG_STS) can cause the assertion of the respective CCx Match Change interrupt (CC1_MATCH_CHG/CC2_MATCH_CHG).	R/W	00h

8.11.40 DRP SINK DEBOUNCE CLEAR ENABLE REGISTER (DRP_CC_SNK_DBCLR_EN)

Address: 089Ah Size: 8 bits

Bits	Description	Type	Default
7:0	**DRP Sink CC Debounce Clear Enable (DRP_SNK_CC_DBCLR_DEB)** This field is used when DRP offload is enabled and the device is advertising as a sink. For a description of operation, see CCx Debounce Clear Enable Registers (CCx_DBCLR_EN).	R/W	00h

© 2024 Microchip Technology Inc. and its subsidiaries

8.11.41 DRP SOURCE DEBOUNCE CLEAR ENABLE REGISTER (DRP_CC_SRC_DBCLR_EN)

Address: 089Bh Size: 8 bits

Bits	Description	Type	Default
7:0	**DRP Source CC Debounce Clear Enable (DRP_SRC_CC_DBCLR_DEB)** This field is used when DRP offload is enabled and the device is advertising as a source. For a description of operation, see CCx Debounce Clear Enable Registers (CCx_DBCLR_EN).	R/W	00h

8.11.42 DRP DUTY CYCLE REGISTER (DRP_DUTY_CYC)

Address: 089Ch Size: 8 bits

Bits	Description	Type	Default
7:3	**RESERVED**	RO	-
2:0	**DRP Duty Cycle (DRP_DUTY_CYC)** Determines the duty cycle used in DRP offload. DFP/UFP Bias 0xxb: 32/32 (No Bias) 100b: 36/28 101b: 41/23 110b: 28/36 111b: 23/41	R/W	0h

8.11.43 DRP SINK SAMPLE ENABLE REGISTER (DRP_SNK_SAMP_EN)

Address: 089Dh Size: 8 bits

Bits	Description	Type	Default
7:0	**DRP Sink Sample Enable (DRP_SINK_SAMP_EN)** This CSR is used to indicate the CC thresholds sampled when utilizing DRP offload and sink operation is being advertised. See CCx Sample Enable Registers (CCx_SAMP_EN) for operation.	R/W	FFh

© 2024 Microchip Technology Inc. and its subsidiaries

8.11.44 DRP SOURCE SAMPLE ENABLE REGISTER (DRP_SRC_SAMP_EN)

Address: 089Eh Size: 8 bits

Bits	Description	Type	Default
7:0	**DRP Source Sample Enable (DRP_SRC_SAMP_EN)** This CSR is used to indicate the CC thresholds sampled when utilizing DRP offload and source operation is being advertised. See CCx Sample Enable Registers (CCx_SAMP_EN) for operation.	R/W	FFh

8.11.45 FRS CONTROL REGISTER (FRS_CTL)

Address: 08A0h Size: 16 bits

Bits	Description	Type	Default
15	**FRS Request (FRS_REQ_EN)** When set, the device shall transmit FRS signaling for the duration defined in FRS Transmission Length Register (FRS_TX_LEN). **Note:** This bit is intended for use when the device is operating as a source.	R/SC	0b
14	**FRS Detect Enable (FRS_DET_EN)** When set, the device is enabled for detecting reception of Fast Role Swap signaling. **Note:** This bit is intended for use when the device is operating as a sink.	R/W	0b
13	**FRS Request PIO (FRS_REQ_PIO)** When set, PIO assertion triggers the transmission of FRS request signaling for the duration defined in FRS Transmission Length Register (FRS_TX_LEN). The PIO is determined by FRS Request PIO Select (FRS_REQ_PIO_SEL).	R/W	0b
12	**FRS Request PIO Value (FRS_REQ_VAL)** PIO value that initiates transmission of FRS signaling.	R/W	1b
11:9	**FRS DAC Setup (FRS_DAC_SET)** When FRS is enabled, this field determines the setup time used for the CC DAC. 0: 0 ns 1: 83 ns 2: 167 ns 3: 250 ns 4: 333 ns 5: 417 ns 6: 500 ns 7: 500 ns **Note:** The setup time is generated from the 12 MHz clock.	R/W	000b

© 2024 Microchip Technology Inc. and its subsidiaries

Bits	Description	Type	Default
8	**FRS PD MAC Override (FRS_PD_MAC_OVR)** FRS_REQ_EN == 1. When set, the PD MAC is disconnected from the respective CC pin. This bit is automatically set when FRS signaling is sent by the FRS FSM. This bit stays asserted until cleared by FW. Clearing this bit allows PD MAC communication to resume. FRS_DET_EN == 1. When set, the PD MAC is disconnected from the respective CC pin. This bit is automatically set after FRS signaling is received, and successfully debounced per FRS CC Debounce Register (FRS_CC_DEB), by the device. This bit stays asserted until cleared by FW. Clearing this bit allows PD MAC communication to resume.	R/W	0b
7:6	**RESERVED**	RO	-
5:4	**FRS CC Select (FRS_CC_SEL)** Determines which pin(s) FRS signaling will be transmitted on. 00b: CC1 pin 01b: CC2 pin 1xb: CC1 and CC2 pin	R/W	00b
3:0	**RESERVED**	RO	-

Note 1: The 48 MHz oscillator must be enabled when using FRS Sink or Source mode functions.

8.11.46 FRS CC DEBOUNCE REGISTER (FRS_CC_DEB)

Address: 08A2h Size: 8 bits

Bits	Description	Type	Default
7:0	**FRS CC Debounce (FRS_CC_DEB)** Defines the debounce period utilized when Fast Role Swap is enabled. The units of this register depend on the sampling rate defined in CC_SAMP_GEN. The units are 2x the rate. **Note:** If the sampling rate implies a period of 10 us (100 Ksps), the units will be 5 us. **Note:** This register shall not be modified while the CC debouncer is enabled. **Note:** PD specification requires FRS signaling to be detected within 30 us to 50 us (tFRSwapRx). The recommended value for this register is 30 us if a 250 KHz sampling interval is used. 10 us of latency may be incurred before the FRS logic detects the FRS signaling. **Note:** Due to the asynchronous relationship between DAC and debouncer logic, the actual debounce time may be +/-1 from the cycle time programmed. **Note:** The 48 MHz oscillator shall be enabled when using this debouncer.	R/W	0h

8.11.47 FRS TRANSMISSION LENGTH REGISTER (FRS_TX_LEN)

Address: 08A4h Size: 8 bits

Bits	Description	Type	Default
7:0	**FRS Transmission Length (FRS_TX_LEN)** Fast Role Swap request transmit duration. Fast Role Swap request is indicated from the initial source to the initial sink by driving CC low for this time. The units of this register are 1 us. **Note:** The valid range of this field is 60 us - 120 us per USB Power Delivery Specification Revision 3.0, Version 1.0 A. **Note:** The 48 MHz oscillator shall be enabled when using this debouncer.	R/W	0h

8.11.48 FRS THRESHOLD SELECT REGISTER (FRS_THR_SEL)

Address: 08A6h Size: 8 bits

Bits	Description	Type	Default
7:3	**RESERVED**	RO	-
2:0	**FRS Threshold Select (FRS_THR_SEL)** Selects the CC threshold used to detect FRS signaling. Typically this value is set to 0h.	R/W	0h

APPLICATION NOTE: The 48 MHz oscillator must be enabled when using FRS Sink or Source mode functions.

8.11.49 FRS PIO SELECTION REGISTER (FRS_PIO_SEL)

Address: 08A7h Size: 8 bits

Bits	Description	Type	Default
7:4	**FRS Request PIO Select (FRS_REQ_PIO_SEL)** Selects PIO used to initiate Fast Role Swap request signaling.	R/W	0h
3:0	**RESERVED**	RO	-

© 2024 Microchip Technology Inc. and its subsidiaries

8.11.50 FRS VBUS DEBOUNCE REGISTER (FRS_VBUS_DEB)

Address: 08A8h Size: 16 bits

Bits	Description	Type	Default
7:4	**RESERVED**	RO	-
3:0	**FRS VBUS Debounce (FRS_VBUS_DEB)** Defines the debounce period utilized when Fast Role Swap is enabled. The units of this register depend on the sampling rate defined in VBUS_SAMP_GEN. The units are 2x the rate defined here. **Note:** If the sampling rate implies a period of 10 us (100 Ksps), the units will be 5 us. **Note:** This register shall not be modified while the CC debouncer is enabled. **Note:** PD specification requires FRS signaling to be detected within 30 us to 50 us (tFRSwapRx). The recommended value for this register is 30 us if a 250 KHz sampling interval is used. 10 us of latency may be incurred before the FRS logic detects the FRS signaling. **Note:** Due to the asynchronous relationship between DAC and debouncer logic, the actual debounce time may be +/-1 from the cycle time programmed. **Note:** The 48 MHz oscillator shall be enabled when using this debouncer.	R/W	0h

8.11.51 VBUS THRESHOLD *X* REGISTERS (VBUS_THR*X*)

Address: x=0: 08B0h Size: 16 bits
x=1: 08B2h
x=2: 08B4h
x=3: 08B6h
x=4: 08B8h

Bits	Description	Type	Default
15:10	**RESERVED**	RO	-
9:0	**VBUS Threshold X (VBUS_THRX)** VBUS Threshold X register. The lower byte of the threshold must be written before the upper byte. The entire 10-bit threshold is updated when the second write occurs. **Note:** The units of this register are ~2.44 mV from a 2.5V FS.	R/W	Note 1

Note 1: Defaults values are loaded from OTP. If the OTP is not configured the defaults are defined in Table 8-14.

© 2024 Microchip Technology Inc. and its subsidiaries

TABLE 8-14: VBUS_THR DEFAULTS

VBUS_THR	VBUS Threshold	1R/9R Divider	VALUE
VSAFE0V Threshold (VSAFE0V_THR)	0.68	0.068	28
VBUS_THR0	3.67	0.36	148
VBUS_THR1	5.5	0.54	222
VBUS_THR2	5.5	0.54	222
VBUS_THR3	5.5	0.54	222
VBUS_THR4	5.5	0.54	222

APPLICATION NOTE: This register may be dynamically written to by software while the VBUS comparator is enabled, provided the rules for updating defined in the CSR description are followed.

APPLICATION NOTE: In the event that firmware wishes to set a threshold, it must take into account the effects of trimming. The adjustment is implemented by comparing the respective threshold value listed in Table 8-14 to the default loaded from OTP. This ratio can be used as an adjustment factor.

APPLICATION NOTE: VBUS_THR2, VBUS_THR3 and VBUS_THR4 do not have a unique OTP default value. Its default is determined by the value in place for VBUS_THR1.

© 2024 Microchip Technology Inc. and its subsidiaries

9.0 BASEBAND CC INTERFACE (BCI)

The device integrates a Baseband CC Interface (BCI) to facilitate USB Power Delivery communication. This module bridges between the PD MAC/BMC and the analog front end. Baseband communication is initiated by the PD MAC, which interfaces to the BCI. The BCI implements the digital functions required to control TX baseband components.

9.1 Baseband TX Data-flow

The key responsibility of the BCI is to generate the wave form required for baseband communication. To this end, the BMC has a group of eight registers that define the low-high and high-low transitions for the generated BMC signal.

When instructed to transition from low-high, the BCI steps through all BB TX Risex Registers (BB_TX_RISEx). Likewise, when instructed to transition from high-low, the BCI steps through all BB TX Fallx Registers (BB_TX_FALLx). The BCI always presents the value at BB_TX_RISE0 or BB_TX_FALL0 first.

APPLICATION NOTE: The user may replicate values if it is desired to use less than twelve unique values for this purpose.

The following steps should be followed to program the BCI for data transmission:

1. Software programs the BB TX Risex Registers (BB_TX_RISEx) and BB TX Fallx Registers (BB_TX_FALLx) to define the slew rate for rising and falling transitions.
2. Software enables the PD MAC.
3. The PD MAC initiates, either via firmware or autonomously via a data transmission (GoodCRC). The PD MAC instructs the BCI to take the BB TX analog components out of power-down.
4. After a sufficient time elapses for the analog to power up, the PD MAC begins transmission to the BMC encoder, which drives the analog components.
5. If the MAC requests a rising transition, the BCI steps through the BB TX Risex Registers (BB_TX_RISEx). Alternatively, if the MAC requests a falling transition, the BCI steps through the BB TX Fallx Registers (BB_TX_FALLx).
6. When the PD MAC indicates the transmission has completed, the BCI powers down the TX analog components.

9.2 Baseband RX Data-flow

Baseband RX data is received by the BCI from the RX analog front-end, where it is compared to a threshold programmed by software. The CC RX DAC Value defines the trip point used for reception of baseband data. The field shall be programmed to be 175 mV below the RX Eye center, as defined in the PD Specification for the mode in which the device is operating (Sourcing Power, Sinking Power, Power Neutral).

In order to program the required trip point, the RX DAC Enable bit must be set and the CC RX DAC Value field in the CC RX DAC Control Register (CC_RX_DAC_CTL) must be programmed.

© 2024 Microchip Technology Inc. and its subsidiaries

9.3 Baseband CC Interface Registers

This section details the baseband CC interface registers. For an overview of the entire device register map, refer to Section 4.0, "Register Map," on page 13.

TABLE 9-1: BASEBAND CC INTERFACE REGISTER MAP

Address	Register Name (Symbol)
2800h	CC RX DAC Control Register (CC_RX_DAC_CTL)
2802h	CC RX DAC Filter Register (CC_RX_DAC_FILT)
2803h	Reserved for future expansion
2804h	CC TX DAC Filter Register (CC_TX_DAC_FILT)
2805h – 280Fh	Reserved for future expansion
2810h	BB TX Risex Registers (BB_TX_RISEx) x=0
2812h	BB TX Risex Registers (BB_TX_RISEx) x=1
2814h	BB TX Risex Registers (BB_TX_RISEx) x=2
2816h	BB TX Risex Registers (BB_TX_RISEx) x=3
2818h	BB TX Risex Registers (BB_TX_RISEx) x=4
281Ah	BB TX Risex Registers (BB_TX_RISEx) x=5
281Ch	BB TX Risex Registers (BB_TX_RISEx) x=6
281Eh	BB TX Risex Registers (BB_TX_RISEx) x=7
2820h	BB TX Risex Registers (BB_TX_RISEx) x=8
2822h	BB TX Risex Registers (BB_TX_RISEx) x=9
2824h	BB TX Risex Registers (BB_TX_RISEx) x=10
2826h	BB TX Risex Registers (BB_TX_RISEx) x=11
2828h – 282Fh	Reserved for future expansion
2830h	BB TX Fallx Registers (BB_TX_FALLx) x=0
2832h	BB TX Fallx Registers (BB_TX_FALLx) x=1
2834h	BB TX Fallx Registers (BB_TX_FALLx) x=2
2836h	BB TX Fallx Registers (BB_TX_FALLx) x=3
2838h	BB TX Fallx Registers (BB_TX_FALLx) x=4
283Ah	BB TX Fallx Registers (BB_TX_FALLx) x=5
283Ch	BB TX Fallx Registers (BB_TX_FALLx) x=6
283Eh	BB TX Fallx Registers (BB_TX_FALLx) x=7
2840h	BB TX Fallx Registers (BB_TX_FALLx) x=8
2842h	BB TX Fallx Registers (BB_TX_FALLx) x=9
2844h	BB TX Fallx Registers (BB_TX_FALLx) x=10
2846h	BB TX Fallx Registers (BB_TX_FALLx) x=11
2848h – 2BFFh	Reserved for future expansion

Note: RESERVED address space must not be written under any circumstances. Failure to heed this warning may result in untoward operation and unexpected results.

© 2024 Microchip Technology Inc. and its subsidiaries

9.3.1 CC RX DAC CONTROL REGISTER (CC_RX_DAC_CTL)

Address: 2800h Size: 16 bits

Bits	Description	Type	Default
15	**RX DAC Enable** 0: Disable the CC RX DAC 1: Enable the CC RX DAC	R/W	0b
14:10	**RESERVED**	RO	-
9:0	**CC RX DAC Value** This register defines the trip point used for reception of baseband data. **Note:** The full scale range of this DAC is 1.8V. **Note:** The DAC must be programmed to be 175mV below the desired RX Eye center. **Note:** For a source, a value of 288 is recommended. For a sink, a value of 146 is recommended.	R/W	0h

9.3.2 CC RX DAC FILTER REGISTER (CC_RX_DAC_FILT)

Address: 2802h Size: 8 bits

Bits	Description	Type	Default
7:2	**RESERVED**	RO	-
1	**Select CC Rx Filter Configuration**	R/W	0b
0	**CC RX DAC Filter Enable**	R/W	0b

9.3.3 CC TX DAC FILTER REGISTER (CC_TX_DAC_FILT)

Address: 2804h Size: 8 bits

Bits	Description	Type	Default
7:5	**RESERVED**	RO	-
4	**CC TX Filter Enable** Enables CC TX filter and driver.	R/W	0
3:0	**CC TX Filter** Selects CC TX filter bandwidth.	R/W	8h

© 2024 Microchip Technology Inc. and its subsidiaries

9.3.4 BB TX RISE*X* REGISTERS (BB_TX_RISE*X*)

Address: x=0: 2810h, x=1: 2812h, x=2: 2814h, x=3: 2816h, x=4: 2818h, x=5: 281Ah, x=6: 281Ch, x=7: 281Eh, x=8: 2820h, x=9: 2822h, x=10: 2824h, x=11: 2826h

Size: 16 bits

The BB TX Rise registers define the characteristics of the baseband waveform on rising transitions.

Bits	Description	Type	Default
15:10	**RESERVED**	RO	-
9:0	**BB TX Rise Value** Code presented to the CC TX DAC when implementing the rising transition for a baseband transmission. **Note:** The recommended values for this field are as follows: x=0: 0 x=1: 57 x=2: 115 x=3: 172 x=4: 230 x=5: 287 x=6: 345 x=7: 402 x=8: 460 x=9: 517 x=10: 574 x=11: 631	R/W	0h

© 2024 Microchip Technology Inc. and its subsidiaries

9.3.5 BB TX FALL*X* REGISTERS (BB_TX_FALL*X*)

Address: x=0: 2830h, x=1: 2832h, x=2: 2834h, x=3: 2836h, x=4: 2838h, x=5: 283Ah, x=6: 283Ch, x=7: 283Eh, x=8: 2840h, x=9: 2842h, x=10: 2844h, x=11: 2846h

Size: 16 bits

The BB TX Fall registers define the characteristics of the baseband waveform on rising transitions.

Bits	Description	Type	Default
15:10	**RESERVED**	RO	-
9:0	**BB TX Fall Value** Code presented to the CC TX DAC when implementing the falling transition for a baseband transmission. **Note:** The recommended values for this field are as follows: x=0: 631 x=1: 574 x=2: 517 x=3: 460 x=4: 402 x=5: 345 x=6: 287 x=7: 230 x=8: 172 x=9: 115 x=10: 57 x=11: 0	R/W	0h

© 2024 Microchip Technology Inc. and its subsidiaries

10.0 POWER DELIVERY MAC

The PD MAC implements certain features of the protocol layer and physical layer of the Universal Serial Bus Power Delivery Specification. On one end, the PD MAC interfaces to the software implementing the bulk of protocol and higher level layers, and on the other end it interfaces to a BMC encoder / decoder module.

In addition to the normal TX and RX functions, the PD MAC implements the test mode logic defined in the USB PD specification (BIST).

The PD MAC supports the following features:

- Automatic TX Mode for packet framing and CRC32 insertion.
- Raw TX Mode for bit level packet control.
- Automatic GoodCRC response to received messages.
- Automatic BIST Error Count Message in BIST RX Mode.
- GoodCRCTimer implementation.
- Automatic retries with programmable retry count.
- Redundant receive packets automatically dropped in Auto Response mode.
- 74 byte TX queue.
- 128 byte RX queue.
- Programmable TX Bit-time. Allows for changing operating frequency.
- Programmable preamble length.
- BIST TX and RX logic.
- Programmable TX and RX queue modes - Buffer mode and FIFO mode.
- CRC32 generator for TX.
- CRC32 calculator and comparator for RX.

10.1 PD MAC Transmitter

The PD MAC transmitter is comprised of three major blocks:

- TX Queue:
  The TX Queue is where software loads the message to be transmitted.
- TX Control:
  The TX Control implements the necessary control logic. It is responsible for reading the data from the TX queue and, based on the data processing mode (automatic or raw), processing the data to make it suitable (nibbles with control information) for use by the TX Comm. It is also responsible for generating packet framing and terminating the packet in automatic mode and generating messages for automatic response (GoodCRC and BIST Error Count). TX Control also handles the selection of the SOP type that is to be transmitted.
- TX Comm:
  The TX Comm is comprised of a TX CRC generator, a 4b5b encoder, serializer, preamble generator and TX bit timer. It takes the nibble data, computes and inserts the CRC, 5b encodes, and generates the baseband serial data. Preamble insertion is also performed by this logic.

The TX Queue is where software loads the message to be transmitted.

The TX Control implements the necessary control logic. It is responsible for reading the data from the TX queue and, based on the data processing mode (automatic or raw), processing the data to make it suitable (nibbles with control information) for use by the TX Comm. It is also responsible for generating packet framing and terminating the packet in automatic mode and generating messages for automatic response (GoodCRC and BIST Error Count). TX Control also handles the selection of the SOP type that is to be transmitted.

The TX Comm is comprised of a TX CRC generator, a 4b5b encoder, serializer, preamble generator, and TX bit timer. It takes the nibble data, computes and inserts the CRC, 5b encodes and generates the baseband serial data. Preamble insertion is also performed by this logic.

The following sub-sections describe the various blocks and sub-blocks in more detail. Some of the supported TX features are also described.

10.1.1 TX QUEUE

The TX Queue is where software loads the message to be transmitted. The following sub-sections describe the TX Queue in more detail.

10.1.1.1 TX Queue Modes of Operation

The TX Queue's write interface (MCU side) has two modes of operation: FIFO mode and Buffer mode.

10.1.1.1.1 FIFO Mode

This mode is enabled by setting the EN_FMQ bit in the TX Control Register A (TX_CTL_A). In this mode, software writes data into the TX Queue like a FIFO. Software can use any offset address in the range of 1800h-1849h (although 1800h would be logical to use). The FIFO is 74 entries deep. Data written to the FIFO cannot be read back by software.

10.1.1.1.2 Buffer Mode

This mode is selected when the EN_FMQ bit in the TX Control Register A (TX_CTL_A) is cleared (default after POR). In this mode, software writes data into the TX Queue as if it were writing to registers at different addresses. The offset address range is 1800h-1849h and the buffer has 74 locations.

© 2024 Microchip Technology Inc. and its subsidiaries

Only byte access should be used while accessing the TX Queue in this mode. Note that buffer offset address 1800h contains the Least Significant Byte (LSB) (byte that goes out first). Buffer offset address 0x049 has the Most Significant Byte (MSB) (byte that goes out last).

Software can arbitrarily write or read any location in the buffer. Only one packet can be queued into the TX Queue at one time. Queuing of multiple packets is not supported.

10.1.1.2 TX Queue Data and Processing Modes

The data placed in the TX Queue depends on the selected processing mode. Two modes are supported: “Auto Mode Data Processing” (AMDP) and “Raw Mode Data Processing” (RMDP).

10.1.1.2.1 Auto Mode Data Processing (AMDP)

This mode is selected by clearing the EN_RMDP bit in the TX Control Register A (TX_CTL_A). In this mode, only the message data (header and data objects) to be transmitted is queued in the TX Queue. Further, the data is queued as bytes. Since there is no framing information with the data, the TX Packet Length Register (TX_PKT_LEN) is used to provide information about the length of message data. Hardware uses this information to determine when and where to append the CRC. Packet framing (preamble, SOP, and EOP) is automatically inserted by the hardware.

10.1.1.2.2 Raw Mode Data Processing (RMDP)

This mode is selected by setting the EN_RMDP bit in the TX Control Register A (TX_CTL_A). In this mode, software is responsible for constructing the entire packet including framing, except the preamble and CRC. Since framing involves K-codes, the data placed in the queue is coded with control information. The data in each byte of the queue is treated as a “nibble” of packet data that either needs to be 5b encoded by hardware or a K-code that should be transmitted without any 5b encoding. There are also some special control bytes to control insertion of CRC and termination of the packet.

When tx_queue_data[5] is “0”, then tx_queue_data[3:0] is treated as 4b regular data. This 4b data goes through the CRC32 generator for CRC calculation and is encoded to 5b, per Table 5-1 of USB PD Specification R1.0 (Table 10-1 shows the 4b5b encoding).

When tx_queue_data[5] is “1”, then tx_queue_data[4:0] is treated as 5b K-code (see Table 10-1). This data is eliminated from the CRC calculation and does not go through any further encoding prior to transmission.

The tx_queue_data[7:0] values of 8'hFF and 8'hFE have special meaning. 8'hFF implies that the packet data is done and hardware should now insert the calculated CRC32 (TX_INS_CRC). 8'hFE implies that the transmission should be stopped immediately (TX_STOP).

Note that in RMDP, software can compute its own CRC and place it in the queue as encoded data. In this case, the TX_INS_CRC code would not be added to the queue and instead software would proceed with adding the EOP and terminating the transfer with TX_STOP.

Table 10-1 shows how the byte wide queued data is interpreted or encoded by the transmission logic in Raw mode.

© 2024 Microchip Technology Inc. and its subsidiaries

TABLE 10-1: RAW MODE DATA ENCODING

tx_queue_data[5:0]	Encoded Symbol
6'h00	5'b11110
6'h01	5'b01001
6'h02	5'b10100
6'h03	5'b10101
6'h04	5'b01010
6'h05	5'b01011
6'h06	5'b01110
6'h07	5'b01111

tx_queue_data[5:0]	Encoded Symbol
6'h08	5'b10010
6'h09	5'b10011
6'h0A	5'b10110
6'h0B	5'b10111
6'h0C	5'b11010
6'h0D	5'b11011
6'h0E	5'b11100
6'h0F	5'b11101

tx_queue_data[5:0]	K-Code	Transmitted Data
6'b1_11000	Sync-1	5'b11000
6'b1_10001	Sync-2	5'b10001
6'b1_01101	EOP	5'b01101
6'b1_00111	RST1	5'b00111
6'b1_11001	RST2	5'b11001

tx_queue_data[5:0]	Special Meaning
8'hFE	TX_STOP
8'hFF	TX_INS_CRC

Note that the tx_queue_data[4:0] is passed as-is when tx_queue_data[5] is set to 1. Thus, software can send reserved symbols for error testing. The only caveat is that hardware cannot be used to generate and insert CRC. In this case, software should compute the necessary CRC32, add it to the data packet and skip the 0xFF code in the queue for CRC insertion.

10.1.1.2.3 TX Queue Programming Sequence - AMDP

The following sequence should be used when programming a sequence in AMDP. This example assumes hardware performs packet framing and CRC insertion.

1. Make sure the GO bit in the TX Control Register B (TX_CTL_B) is cleared, i.e., hardware is done with previous TX request.
2. If using FIFO mode, clear the TX Queue WRI pointer by writing a "1" to the RST_TXQ_FIFO_WRI_PTR bit of the TX Control Register B (TX_CTL_B).
3. Write the two header bytes.
4. Write the payload data, if any.
5. Write the number of bytes to the TX Packet Length Register (TX_PKT_LEN).
6. Check to see if it is OK to transmit via the OK_TO_TX bit in the TX Control Register B (TX_CTL_B)).
7. If OK_TO_TX: set the GO bit in the TX Control Register B (TX_CTL_B) to start transmission. Else: repeat step 6. Note: If an RX is in progress, the current TX may need to be abandoned.

10.1.1.2.4 TX Queue Programming Sequence - RMDP

The following sequence should be used when programming a sequence in RMDP. This example assumes hardware performs CRC insertion.

1. Make sure the GO bit in the TX Control Register B (TX_CTL_B) is cleared, i.e., hardware is done with previous TX request.
2. If using FIFO mode, clear the TX Queue WRI pointer by writing a "1" to the RST_TXQ_FIFO_WRI_PTR bit of the TX Control Register B (TX_CTL_B).
3. Write the SOP K-Codes to the FIFO (*Sync-1, Sync-1, Sync-1, Sync-2).
4. Write two header bytes, splitting each byte into nibbles.
5. Write the payload data, if any, splitting each byte into nibbles.
6. Write the value "0xFF" to insert the CRC.
7. Write the EOP K-Code (EOP).
8. Write the value "0xFE" to terminate the transmission. Failure to write this value will cause transmission to continue indefinitely looping on the TX buffer.
9. Check to see if it is OK to transmit via the

© 2024 Microchip Technology Inc. and its subsidiaries

OK_TO_TX bit in the TX Control Register B (TX_CTL_B)).

10. If OK_TO_TX: set the GO bit in the TX Control Register B (TX_CTL_B) to start transmission. Else: repeat step 9. Note: If an RX is in progress, the current TX may need to be abandoned.

Note: The value of the TX Packet Length Register (TX_PKT_LEN) is ignored for this mode since hardware knows when to terminate the packet based on detection of the TX_STOP control code.

10.1.2 TX CONTROL

The TX Control implements the necessary control logic. It is responsible for reading the data from the TX queue and, based on the data processing mode (automatic or raw), processing the data to make it suitable (nibbles with control information) for use by the TX Comm. It is also responsible for generating packet framing and terminating the packet in automatic mode, as well as generating messages for automatic response (GoodCRC and BIST Error Count). TX Control also handles the selection of the SOP type that is to be transmitted.

10.1.2.1 Transmit Requests

There are four sources of transmit requests:

- GoodCRC ACK from the receiver for a soft Reset
- GoodCRC ACK from the receiver for a normal packet
- BIST error count message from the BIST receiver
- Transmit go from the software

10.1.2.2 Transmit Aborts

Once packet transmission is initiated, the device will power up the analog and then wait for the bus turn-around timers and power-up timers to expire. During this wait, the transmission can be aborted by software. Additionally, the device will abort the transmission when a good packet (including soft Reset), a hard Reset, or a cable Reset (if enabled and the SOP type of the pending TX is SOP', SOP", SOP'_Debug or SOP"_Debug) is received.

Once the bus turn-around time has expired (or if it was already expired) and the power-up time is expired, the bus is checked for idle. If the bus is idle, the transmission is started. If the bus is not idle, the transmission is discarded, and typically, an abort status set. This discard can be disabled with the WAIT4LINE_IDLE bit in the TX Control Register A (TX_CTL_A) for all packets. It is also disabled for auto response triggered GoodCRC Acks for received soft Resets (unless the feature is disabled via the DIS_SPCL_SR_GCRC_ACK bit).

If the transmission is not discarded because the bus is non-idle, the device waits for the bus to become idle and then, once again, waits for the turn-around time. During the wait for bus idle, the transmission can be aborted by software and will be aborted by the hardware if a good packet, a hard Reset or a cable Reset (if enabled and the SOP type of the pending TX is SOP', SOP", SOP'_Debug or SOP"_Debug) is received.

Software issued hard and cable Resets are not aborted due to received good packets, hard Resets or cable Resets.

Note that for a received good packet to abort a pending transmission, the SOP type of the received packet must match the SOP type of the pending transmission, or the SOP type of the received packet must be SOP with the SOP type of the pending transmission being non-SOP (the latter can be disabled via the DIS_SOP_ABRTS_NON_SOP bit in the TX Control Register A (TX_CTL_A)). For messages other than soft Reset, the received message ID must indicate a non-duplicated packet (soft Resets are never considered duplicates). Ping and GoodCRC messages do not cause a transmission to abort.

Separate TX interrupt abort bits and separate abort status registers are provided for software issued and auto-response packets.

10.1.2.3 Transmit Retries

Transmitted packets are retried under two scenarios: bus idle violations, and GoodCRC response timeout.

If the transmission is discarded due to the bus being non-idle, the option exists to retry instead of treating it as an abort. In order for this to occur, the packet must have been initiated by software, not be a hard or cable Reset, Auto Response mode must be enabled, the retry count must be non-zero, and the RETRY_ON_LINE_BUSY bit in the TX Control Register A (TX_CTL_A) must be set. If after the specified number of retries, the transmission failed due to bus busy, the TX_FAILED status is set (not TX_ABORTED). Hard and cable Resets are not retried.

Following the transmission of a software initiated frame (other than hard and cable Resets), the device will start a timer and wait for a GoodCRC response to be indicated by the receiver. This assumes retries and/or the wait for GoodCRC are enabled.

If a GoodCRC is received with the correct SOP type and message ID, then the wait is finished and the transmission is done. If a GoodCRC is received with the wrong SOP type or message ID, it is ignored by the transmitter (the transmitter is not even notified) and silently dropped by the receiver.

If the wait for CRC timer expires and the remaining retry count is non-zero, the original packet is re-transmitted. If the remaining retry count is zero, then the packet is not retried and a failed status is indicated.

© 2024 Microchip Technology Inc. and its subsidiaries

The wait for GoodCRC will be aborted if any of the following are received:

- A hard Reset
- A cable Reset (if cable reset reception is enabled and the SOP type of the pending TX is SOP', SOP'', SOP'_Debug or SOP''_Debug)
- A soft Reset (if the SOP type of the RX is the same as that of the pending TX or the SOP type of the RX is SOP with the SOP type of the pending transmission being non-SOP)
- A good packet, other than a GoodCRC or Ping (if the SOP type of the RX matches that of the pending TX, or if the SOP type of the RX is SOP while the SOP type of the pending transmission is non-SOP; the latter condition can be disabled via the DIS_SOP_ABRTS_NON_SOP bit in the TX Control Register A (TX_CTL_A), provided that the packet is not a duplicate message)

The latter two causes are considered to be protocol errors.

The wait for GoodCRC can also be aborted by software. An aborted wait for GoodCRC is not retried.

10.1.2.4 Transmitter Disable

In order to avoid a race condition where the software is currently issuing a transmit and the hardware is receiving a packet, the EN_FWTX bit in the TX Parameters Register A (TX_PARAM_A) is automatically cleared if a hard Reset to a cable Reset (if enabled - no SOP type checking is done since a transmission may not be pending) has been received (based on the RX_CABLE_RST and RX_HARD_RST bits in the RX Interrupt Status Register (RX_IRQ_STAT)) or if there is any data in the RX FIFO. Using the interrupt and FIFO status (level sensitive) instead of the even occurrence (edge) avoids another race condition where the software has set the EN_FWTX bit just following the event.

10.1.3 TX COMM

The TX Comm is responsible for taking the coded nibbles from TX Control, encoding it if necessary, and serializing to make it ready for transmission. It is responsible for preamble insertion, CRC calculation, and CRC insertion. It also provides the TX clock signal for the BMC encoder.

10.1.3.1 Preamble Insertion

The device automatically adds the alternating “0” and “1” preamble to the transmitted packet. When the transmission of the preamble is completed, data from TX Queue is processed under direction of the TX Control.

The number of preamble bits sent is programmable by the value of the PREAMBLE_LEN bit in the TX Parameters Register B (TX_PARAM_B).

Note:	Setting the PREAMBLE_LEN field to an odd value will cause violation of the USB PD Specification which states, “The preamble shall start with a ‘0’ and shall end with a ‘1’.” An odd value will cause the preamble to start with a value of “0”, but it will also end in a value of “0.” Setting this field to an odd value may or may not lead to functional issues. Therefore, this field should be set to an even value to remain USB PD Specification compliant.

10.1.3.2 TX CRC32

The transmit CRC is reset at the start of transmission (setting of the GO bit in the TX Control Register B (TX_CTL_B) or by triggering of the automatic response by hardware).

The coded nibble data is streamed into the TX CRC32 one nibble at a time for CRC calculation. Only valid D-Code data is used in CRC calculation. All framing data (invalid D-Code) is excluded from CRC calculation.

Note:	The CRC32 algorithm is described in the USB PD Specification.

10.1.3.3 TX Bit Timing

The baseband transmit signal bit time is controlled by the value in the TX Bit-Time Count Register (TX_BITTIME_CNT). This value determines the transmit data rate.

The count value is based on clock frequency and is given by:
((Clock Freq KHz / Bit Rate Kbps) - 1)

For example:

Clock Frequency = 48000KHz (48MHz)
Nominal Bit Rate = 300 Kbps
bit_time_cnt = (48000 / 300) - 1 = 159

10.1.4 AUTOMATIC RESPONSE MODE

The device supports an Automatic Response mode (not to be confused with Automatic Data Processing mode). In this mode, the device will automatically send a GoodCRC message upon successful packet reception or a BIST Error Count message upon reception of a BIST PRBS frame. This mode can be enabled by setting the EN_AUTO_RSP_MODE bit in the TX Control Register A (TX_CTL_A).

During normal auto response, if the bus is found to be busy when the device attempts to send the auto-response (should not happen, except if there is noise), it will abort the transmission and the AUTO_RSP_ABORTED bit in the TX Interrupt Status Register (TX_IRQ_STAT) will be set. This behavior can be

© 2024 Microchip Technology Inc. and its subsidiaries

altered by setting the WAIT4LINE_IDLE bit in the TX Control Register A (TX_CTL_A). Setting this bit will force the device to wait until the bus becomes idle (refer to the WAIT4LINE_IDLE bit description for additional information). GoodCRCs and BIST Error Count messages are not retried even if RETRY_ON_LINE_BUSY in TX_CTL_A is set.

In USB Power Delivery Revision 1.0, the soft Reset followed a one-strike rule, and the failure of a soft Reset led to a hard Reset, leading to the link being brought down. As a result, the transmission of a GoodCRC ACK in response to reception of a soft Reset is handled slightly differently. If hardware finds that the line is busy when it attempts to send the GoodCRC ACK, it will wait until the line becomes idle and then retry the transmission. This process will happen indefinitely. This behavior is the same as what happens to a normal GoodCRC ACK when the WAIT4LINE_IDLE bit is set. GoodCRCs are not retried even if the RETRY_ON_LINE_BUSY bit in the TX Control Register A (TX_CTL_A) is set. For USB Power Delivery Revision 3.0, soft Resets are normally retried; therefore, this function should be disabled via the DIS_SPCL_SR_GCRC_ACK bit.

The SOP type used for the automatically sent GoodCRC packet corresponds to the SOP type of the received packet (parsed by the receiver). The SOP type that is used for the BIST Error Count message is selected via the TX_SOP_SELECT bit in the TX Parameters Register A (TX_PARAM_A).

For both GoodCRC and BIST Error Count messages, bit 8 in the packet header is taken from either the PORT_POWER_ROLE (for SOPs) or the CABLE_PLUG (for SOP', SOP'' and _debugs) bits within the TX Parameters Register C (TX_PARAM_C), depending on the SOP type that was received. Bit 5 in the packet header is taken from either the PORT_DATA_ROLE bit (for SOPs) or set to zero (for SOP', SOP'' and _debugs), depending on the SOP type that was received.

In order to avoid missing an auto response GoodCRC request, a flag is used. The flag is set with a request pulse from the receiver and is cleared when the response is sent or aborted. Along with the request flag being set, the SOP type and message ID of the request, as well as the soft Reset response indication, are saved. In the event that there was a pending auto response GoodCRC request and another packet was received resulting in another auto response GoodCRC request, the second request will replace the first request, unless the first request had a SOP type of SOP and the second request had a SOP type of SOP'_Debug or SOP''_Debug. This replacement occurs regardless of the setting of the DIS_SOP_ABRTS_NON_SOP bit in the TX Control Register A (TX_CTL_A). Even if a received packet does not abort a pending auto response, the pending auto response may get replaced by a new auto response.

10.1.5 AUTOMATIC RETRY MODE

The device also supports an Automatic Retry mode. In this mode, when a GoodCRC message is not received in the appropriate time (i.e., before CRCReceiveTimer expires), the current message is retried.

Hardware will retry the message until the retry value specified in the N_RETRY_CNT field in the TX Parameters Register C (TX_PARAM_C) is satisfied. If the N_RETRY_CNT is set to zero, Automatic Retry mode is disabled.

The number of retries used by the device to complete the transaction is tracked and made available to software via the N_HW_RETRIES field in the TX Status Register (TX_STAT).

An N_RETRY_CNT value of zero implies the message is attempted only once, i.e., hardware will not retry it. N_RETRY_CNT specifies the number of retries so the number of attempts is (N_RETRY_CNT + 1). Stated another way, if you want hardware to make “N” attempts to send a message then the N_RETRY_CNT field must be set to “N-1.”

Reception of a hard Reset or cable Reset (when enabled and if the SOP type of the pending TX is SOP', SOP'', SOP'_Debug or SOP''_Debug) from a port partner, messages other than GoodCRC or Ping message (if the SOP types of the RX and TX match or if the SOP type of the RX is SOP with the SOP type of TX being non-SOP (the latter can be disabled via the DIS_SOP_ABRTS_NON_SOP bit in the TX Control Register A (TX_CTL_A)) and the packet was not a duplicate), or issuance of abort by software will terminate any pending auto retries.

Detection of a bus collision will cause the device to abort the current transfer, including any pending auto retries unless the RETRY_ON_LINE_BUSY bit in the TX Control Register A (TX_CTL_A) is set.

Note that disabling of automatic retry by setting N_RETRY_CNT to zero will also disable the device’s ability to wait for a GoodCRC message before a successful message transmission is indicated. This applies, for example, to the case when a soft Reset is transmitted. To circumvent this limitation, a EXPECT_GOODCRC bit in the TX Parameters Register A (TX_PARAM_A) is available. Setting this bit will cause the device to wait for a GoodCRC in response to a TX message, even when the N_RETRY_CNT field is set to zero.

Note:	Setting N_RETRY_CNT to zero after the GO bit has been set will have no effect for the current transfer.

The expected message ID within the GoodCRC message is set by software via the MSG_ID field in the TX Parameters Register A (TX_PARAM_A). This is compared to the message ID within the received GoodCRC message.

© 2024 Microchip Technology Inc. and its subsidiaries

The expected SOP type within the GoodCRC message is set by software via the TX_SOP_SELECT field in the TX Parameters Register A (TX_PARAM_A). This is compared to the SOP type received in the GoodCRC message. In order for the GoodCRC message to be received, it is assumed that the SOP type has been enabled via the RX_SOP_ENABLE field in the RX Control Register B (RX_CTL_B).

10.1.6 IFG TIMER

The TX turn-around timer is used to ensure that a minimum bus idle time is guaranteed between packet reception and packet transmission, i.e., sending of a GoodCRC message upon successful packet reception.

The value of this timer is programmable via the TX Turnaround Time Register (TX_TA_TIME). The value is specified in uSec. This timer uses the free-running 1us pulse so the value of this register should be 1 more than desired to ensure the minimum time.

10.1.7 CRC RECEIVE TIMER

This timer is enabled when the device is expected to wait for a GoodCRC ACK (i.e., Automatic Retry mode is enabled by a non-zero value in the N_RETRY_CNT field of the TX Parameters Register C (TX_PARAM_C) or if zero, EXPECT_GOODCRC bit in the TX Parameters Register A (TX_PARAM_A) is set) at the time transmission is requested. This timer can also be enabled for software usage via the EN_CRC_RCV_TMR bit in the RX Control Register A (RX_CTL_A).

If enabled, the timer starts whenever a TX packet transmission stops.

If software aborts a TX packet in between transmission with Auto Retry mode enabled, this timer will not be triggered and will be disabled. If software aborts a TX packet with auto retry disabled, then it should also disable the timer by clearing the EN_CRC_RCV_TMR bit in the RX Control Register A (RX_CTL_A).

The timeout value for CRCReceiveTimer is programmable via the TRECEIVE field in the RX tReceive Time Register (RX_TRECEIVE_TIME) in multiples of 10 uSec.

This timer can be used by software as the BISTReceiveErrorTimer in the BIST TX mode (the device does not automatically time BISTReceiveError) and as the CRCReceiveTimer when not using automatic retry or wait for GoodCRC modes.

10.1.8 ABORTING A TX IN PROCESS

Software can abort a transmission that has already started by issuing an abort via the ABORT bit in the TX Control Register B (TX_CTL_B). The packet will be aborted as follows based on current phase of transmission:

- If packet transmission had not yet started because the device was waiting for the turn-around timer to expire or line to become idle, transmission will be aborted immediately.
- If the current phase is preamble, the device will complete transfer of the current bit, append EOP, and turn the transmitter off.
- If the current phase is SOP, Data, or CRC, the device will complete transfer of the current nibble, append EOP, and turn the transmitter off.

A hard Reset should follow this operation, which is the software's responsibility.

10.2 PD MAC Receiver

The PD MAC receiver is comprised of three major blocks:

- RX Queue:
  The RX Queue is where software reads the received messages.
- RX Control:
  The RX Control implements the necessary control logic. It is responsible for validating the received packet, updating the RX Queue status, and triggering automatic responses, if required.
- RX Comm:
  The RX Comm is comprised of the Clock and Data Recovery (CDR), RX DES (de-serializer) (serial-to-parallel converter, 4b5b decoder, and framing detector), RX CRC32 (CRC calculator, receive timer), and other logic to detect valid packet reception.

The RX Queue is where software reads the received messages.

The RX Control implements the necessary control logic. It is responsible for validating the received packet, updating the RX Queue status and triggering automatic responses, if required.

The RX Comm is comprised of the Clock and Data Recovery (CDR), RX DES (de-serializer) (serial-to-parallel converter, 4b5b decoder, and framing detector), RX CRC32 (CRC calculator, receive timer), and other logic to detect valid packet reception.

The following sub-sections describe the various blocks and sub-blocks in more detail.

10.2.1 RX QUEUE

The decoded RX data (header, data objects, and CRC) are saved into an integrated 128 byte RX FIFO. The RX FIFO is capable of storing multiple packets and provides read and write pointers.

Two bytes are added to the beginning of each packet. Byte 0 holds the packet status (SOP type and the legacy “buffer” valid bit), and byte 1 holds the packet length. An option exists to swap these values (length in byte 0, status in byte 1) and add one to the packet length (to account for the status byte). This option is

© 2024 Microchip Technology Inc. and its subsidiaries

used for an SMBus like block read where the first byte read indicates the length of the transfer and the remaining bytes (the status and the packet) follow. Note that the packet includes the 4 byte CRC, which is included in the length.

The following sub-sections present details of how the write and read interfaces to the FIFO appear.

10.2.1.1 RX FIFO Write Interface

Figure 10-1 shows how the write interface (from receive hardware's perspective) appears at various points of reception.

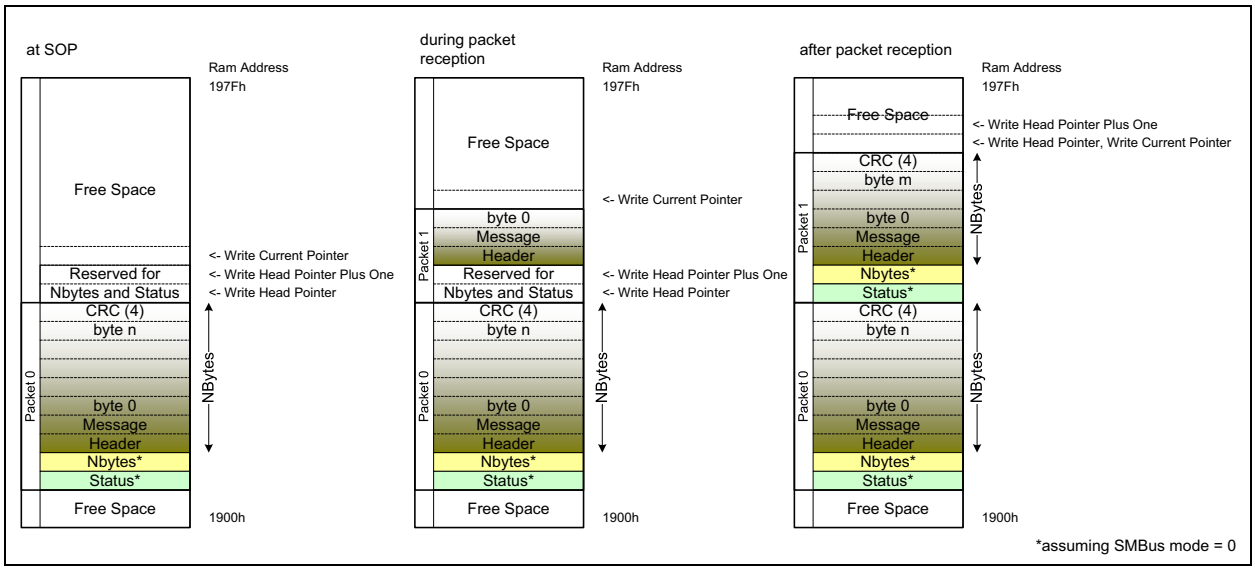

FIGURE 10-1: *Write Interface View of RX FIFO.*

Each RX Packet is comprised of two bytes of control information and the received packet data. The status byte indicates whether the data is valid and the SOP type that was received. A value of 0x00 in the status byte implies that the data is not valid (including the Nbytes field). When bit 0 of the status byte is 1'b1, the Nbytes field indicates the length of the packet, and bits 6:4 of the status byte indicate the SOP type that was received. An empty FIFO always returns a value of 0x00. However, the status byte should not be polled, but rather the RX_FIFO_NOT_EMPTY bit in the RX Interrupt Status Register (RX_IRQ_STAT) should be used. The valid bit is retained for legacy compatibility. When software reads the packet data from the FIFO, it should only read the number of bytes indicated by Nbytes (in addition to the Nbytes and status entries). Note that the byte count indicated by NBytes includes the CRC32 data.

When SMBus mode is enabled (via the EN_SMBUS_MODE bit in the RX Control Register A (RX_CTL_A)), the status and Nbytes fields are swapped and Nbytes is incremented by 1 to include the status byte. The swapping makes the (not recommended) polling of the status byte impossible for this mode. When software reads the packet data from the FIFO, it should only read the number of bytes indicated by NBytes (in addition to the Nbytes entry). Figure 10-2 details the format while in SMBus mode.

© 2024 Microchip Technology Inc. and its subsidiaries

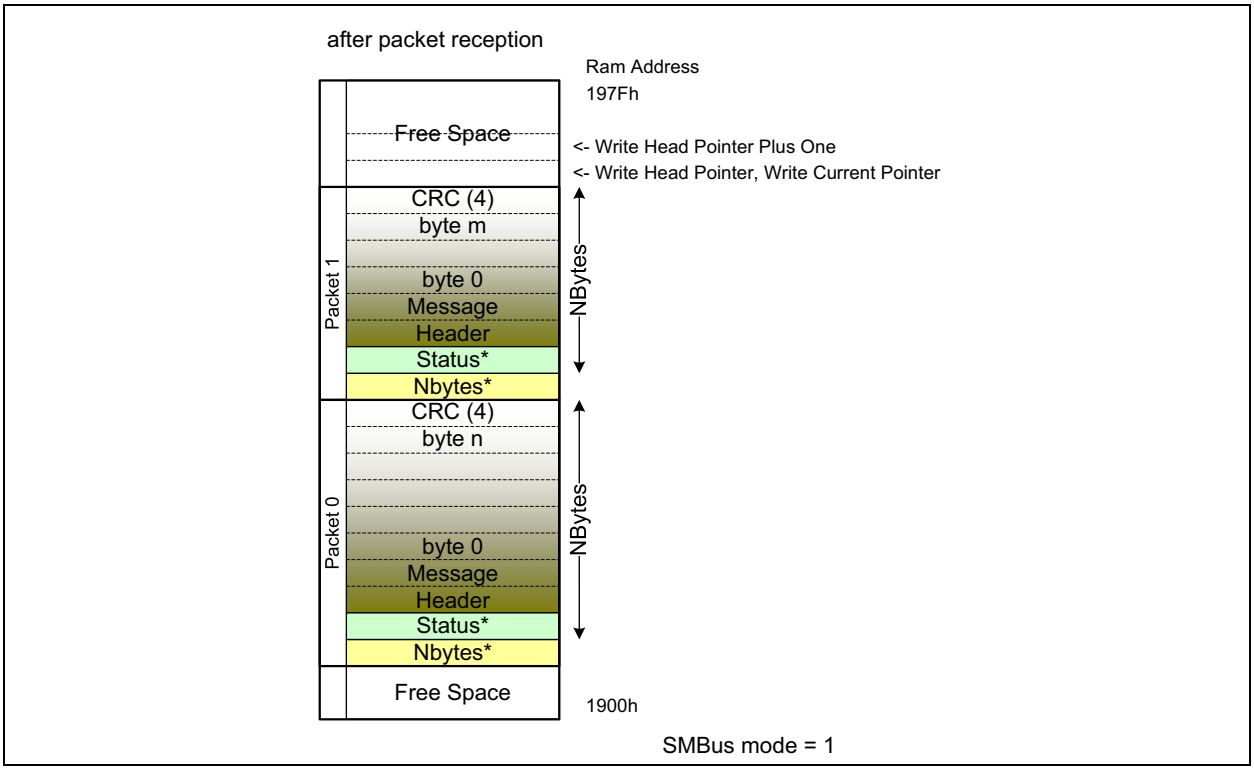

FIGURE 10-2: *RX FIFO SMBUS Mode.*

The packet status and NBytes format are shown in Table 10-2 and Table 10-3, respectively.

TABLE 10-2: RXQ STATUS FIELD

Bits	Description	Type
7	**RESERVED** Always reads 0.	RO
6:4	**RX_SOP_TYPE** This field indicates the SOP type that was received. 000b: SOP 001b: SOP' 010b: SOP'' 011b: SOP'_Debug 100b: SOP''_Debug 101b - 111b: Reserved	RO
3:1	**RESERVED**	RO
0	**Status** Status of queue data 0b: Data is invalid 1b: Data is valid	RO

TABLE 10-3: RXQ NUMBER OF BYTES (NBYTES) FIELD

Bits	Description	Type
0	**NBYTES** If EN_SMBUS_MODE is 0, this field represents the number of bytes of valid data in the packet. If EN_SMBUS_MODE is 1, this field represents the number of bytes of valid data in the packet plus 1.	RO

© 2024 Microchip Technology Inc. and its subsidiaries

When the device detects valid SOP signaling, the current write pointer is set to the write head pointer plus 2. As packet data is received, it is written into the FIFO at the current write pointer and following each write the current write pointer is incremented. The current write pointer points to the next location to be written. Upon reaching the top of the RAM, the current write pointer wraps to 0. The byte count is maintained by the RX control block.

When a valid EOP is received and a good CRC residue is indicated by CRC logic, hardware will write the status (valid bit and received SOP type) to the location addressed by the write head pointer and the number of received bytes to the location addressed by the write head pointer plus one. SMBus mode will swap the data (and increment the number of bytes). Following the writing of the status and length, the write head pointer is updated to the current write pointer, and the write head pointer plus one is updated to the current write pointer plus 1 (accounting for the wrap at the top of the RAM).

If a valid EOP is not received and the bus becomes idle, then an abnormal termination is detected. In this case, the packet is dropped, i.e., the device will not update the NBytes location or the Status location.

If a valid EOP is detected but the CRC generator indicates an invalid CRC, then the packet is corrupted. The device will drop the packet and not update the NBytes location or the status location.

If more data is received than will fit in the FIFO, then an overrun is detected. The excess data does not get written into the FIFO and the current write pointer is not incremented.

A separate test is made at the start of the packet to determine if there is sufficient room for the status and length bytes. In the event of a “no room for header” condition, an overrun is detected. The excess data does not get written into the FIFO, and the current write pointer is not initialized.

If a packet has reached the maximum size allowed (as specified by the RX Maximum Packet Size Register (RX_MAX_SIZE)) and more data is received, then an oversize is detected. The excess data does not get written into the FIFO, and the current write pointer is not incremented.

All pointers consist of a RAM address and a wrap indication. The wrap indication is toggled each time the pointer wraps past the top of the RAM. The wrap indication is used in the full, “no room for header” and empty comparisons to distinguish between the write pointers being a full RAM size ahead of the read pointer (full conditions in which case the wrap toggles would be opposite) and the write pointers being equal to the read pointer (empty condition in which case the wrap toggles would be equal).

All pointers and status bits are readable by the software. All pointers and wrap around status bits are writable by the software. Software is responsible for maintaining coherency between the pointer and the wrap toggle values.

The FIFO pointers can be reset by setting and clearing the RST_RECEIVER bit in the RX Control Register A (RX_CTL_A).

10.2.1.1.1 Duplicate/Repeated Packet Handling

When the device is setup for automatic response (sending of GoodCRC message), it may receive a packet multiple times because the GoodCRC response was lost. If the original packet was received successfully then the subsequent messages of that SOP type with matching message IDs are automatically dropped.

What the device does depends on the CRC status from the CRC generator at EOP. If the CRC is good and the message ID from the current message matches that of the previous message (stored MSG_ID per SOP type), the device will not update the packet's status and length locations, nor will it update the write head pointer and write head pointer plus one. The FIFO space will be reclaimed at the start of the next packet. The RX_PKT_DROPPED bit in the RX Error Interrupt Status Register (RX_ERR_IRQ_STAT) will be set to indicate this condition. The device will then resend a GoodCRC response. If, however, the CRC generator indicates a bad CRC, or EOP is not received, the device will process the packet like a corrupted packet. The stored MSG_ID will not be updated.

Note that a duplicate packet is dropped if automatic retry was enabled, the transmitter was waiting for a GoodCRC and a message other than a GoodCRC was received (a protocol error).

The device maintains an individual count of duplicate packets dropped (RX Duplicate Packet Count Register (RX_DUP_PKT_CNT)) and corrupt packets received (RX BadCRC Packet Count Register (RX_BADCRC_PKT_CNT)). If either of these counts exceed 127, the DBG_EVENT bit in the RX Error Interrupt Status Register (RX_ERR_IRQ_STAT) will be set.

10.2.1.1.2 GoodCRC Packet Storing and Dropping

In the case where automatic retry is enabled and the transmitter was waiting for a GoodCRC, the GoodCRC response will be dropped. The device will not update the packet's status and length locations, nor will it update the write head pointer and write head pointer plus one. The FIFO space will be reclaimed at the start of the next packet. Note that the GoodCRC response is dropped even if the SOP type or message ID did not match the expected value.

Table 10-4 summarizes the conditions and results for storing or dropping good packets.

© 2024 Microchip Technology Inc. and its subsidiaries

TABLE 10-4: CONDITIONS AND RESULTS FOR DROPPING GOOD PACKETS

Event		Result	
IF Expecting GoodCRC	Received soft Reset with SOP of RX matching SOP of TX	Packet stored with error status	RX_PKT_STAT[2] (PCOL_ERROR)
	Received GoodCRC with correct SOP type and message ID	Packet dropped	
	Received GoodCRC with wrong SOP type or wrong message ID		
	Received other than GoodCRC or Ping with SOP or RX matching SOP of TX, and first message of this SOP type or message ID not matching last message ID of this SOP type (i.e., not a duplicate)	Packet stored, with error status	RX_PKT_STAT[2] (PCOL_ERROR)
ELSE IF Auto Response Enabled	Received soft Reset	Packet stored, message ID saved	
	Received other than GoodCRC or soft Reset and first message of this SOP type		
	Received other than GoodCRC or soft Reset and message ID does not match last message ID of this SOP type		
	Received other than GoodCRC or soft Reset and message ID matches last message ID of this SOP type	Packet dropped with duplicate status	RX_PKT_STAT[1] (DUPLICATE_PACKET)
	Received GoodCRC	Packet stored	
ELSE	Received other than GoodCRC (including soft Reset)	packet stored, message ID saved	
	Received GoodCRC	Packet stored	

Note: If auto response is enabled, any time a packet other than a GoodCRC is stored, a GoodCRC response is transmitted.

10.2.1.2 RX FIFO Read Interface

Figure 10-3 shows how the read interface appears at various points of the software read.

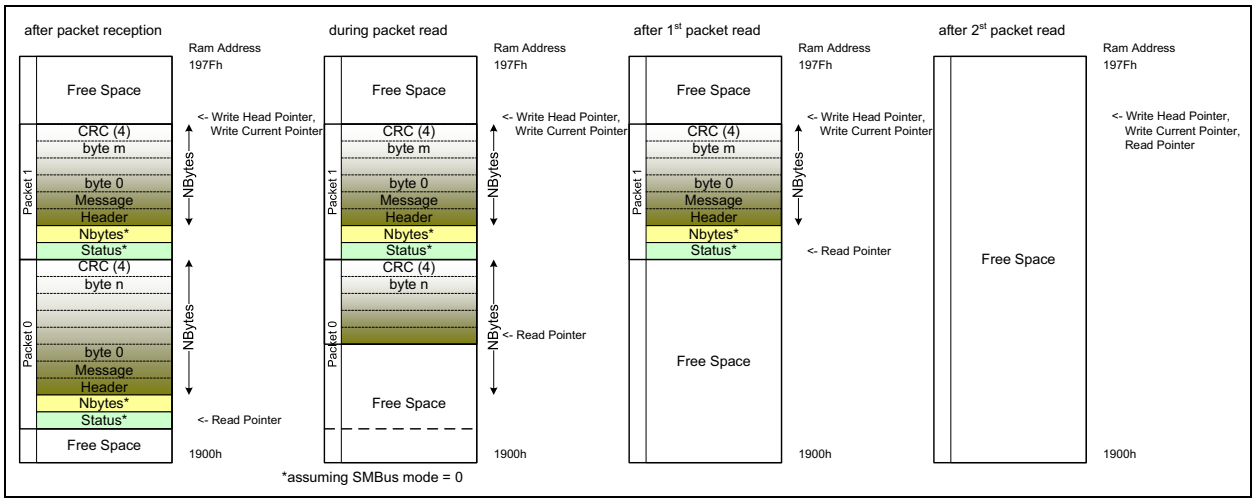

FIGURE 10-3: *Read Interface View of RX FIFO.*

© 2024 Microchip Technology Inc. and its subsidiaries

The RX FIFO read interface always uses a FIFO access mode. The read is destructive, returning the current data and releasing the FIFO space. Although the software may rewind the read pointer for test purposes, there is no guarantee that the data has not been overwritten.

After determining the validity of data in the FIFO queue by reading the RX_FIFO_NOT_EMPTY bit in the RX Interrupt Status Register (RX_IRQ_STAT), software may read the data from the RX FIFO. Software may read the entire packet without the need to recheck the RX_FIFO_NOT_EMPTY bit.

Although written as each byte is received, valid data in the FIFO is only indicated once the entire packet is received and validated.

Depending on the setting of the EN_SMBUS_MODE bit in the RX Control Register A (RX_CTL_A), either the status or the Nbytes field is read first, followed by the other. If SMBus mode is enabled, the Nbytes field is read first and will include the status byte, otherwise it is read second and just indicates the packet length. Note that the packet includes the 4 byte CRC and the length includes this.

As the FIFO is accessed, packet data is read from the FIFO at the read pointer, and following each read, the read pointer is incremented. The read pointer points to the next location to be read. Upon reaching the top of the RAM, the read pointer wraps to 0.

The FIFO space is released as the packet is read. There is no need for software to specifically release the buffer space.

If software needs to flush a packet without reading the data, it may do so by writing the RX FIFO Read Pointer Register (RX_FIFO_RD_PTR) and RX FIFO Read Pointer Control Bits Register (RX_FIFO_RD_PTR_CTL_BITS). Software should add the appropriate value to the read pointer, taking into account the amount of data already read. Wrap at the top of the RAM must be accounted for, both the read pointer and the RX_FIFO_RX_PTR_WRAP control bit. In order to maintain coherency, the device will hold a write to the RX FIFO Read Pointer Register (RX_FIFO_RD_PTR) in a temporary register and transfer it to the actual register when the RX FIFO Read Pointer Control Bits Register (RX_FIFO_RD_PTR_CTL_BITS) is written.

Although accessed as a FIFO, software can use any offset address in the 128 byte FIFO address range.

Although not recommended, the software can read from the FIFO if it is empty. The returned data will be 0 and the FIFO will not underrun.

All pointers consist of a RAM address and a wrap indication. The wrap indication is toggled each time the pointer wraps past the top of the RAM. The wrap indication is used in the full, “no room for header” and empty comparisons to distinguish between the write pointers being a full RAM size ahead of the read pointer (full conditions in which case the wrap toggles would be opposite) and the write pointers being equal to the read pointer (empty condition in which case the wrap toggles would be equal).

All pointers and status bits are readable by the software. All pointers and wrap around status bits are writable by the software. Software is responsible for maintaining coherency between the pointer and the wrap toggle values.

The FIFO pointers can be reset by setting and clearing the RST_RECEIVER bit in the RX Control Register A (RX_CTL_A).

Each entry in the RX FIFO represents a byte of received data. Data written to the FIFO is the header, the payload, and the CRC32. As stated earlier, only 5b symbols that correspond to valid D-codes are processed and written to the RX Queue. K-Codes cannot be passed to the RX Queue, i.e., there is no “Raw mode” receive capability. Software will see de-framed packets only.

As mentioned earlier, the data in FIFO is the actual data and not symbols, so it can be processed by software directly. Corrupted packets are not written to the Queue.

10.2.2 RX CONTROL

RX Control implements the logic necessary for validating a received packet, updating the RX Queue status, and triggering automatic responses, if required.

10.2.2.1 Duplicate Packet Detection

For duplicate packet detection, the device maintains the last message ID received per SOP type. A flag (first_msg) is maintained per SOP type and indicates if the stored last message ID is valid (there has been a previous packet). This information is used when a good packet is received to detect if the message ID matches the last one received for that SOP type.

The device stores the current message ID into the appropriate last message ID (as selected by the SOP of the current received packet). The message ID and flag for a specified SOP type can be reset via the RX Message ID Stored Register (RX_MSG_ID_STORED). All bits are cleared when software issues a SW_RESET or PD_RESET via the Reset Control Register (RESET_CTL).

10.2.2.2 RX Control of Transmit Abort

Although the actual aborting of a pending transmission is done by the Transmit Control block, it is the RX Control block that makes the decision.

For pending transmissions (transmission triggered but waiting for bus idle or the bus turnaround time), the RX control block generates a pulse at the EOP. It checks 1) that the packet is a good packet (good CRC, proper nibble alignment and no symbol errors), 2) that the

© 2024 Microchip Technology Inc. and its subsidiaries

packet is not a Ping or GoodCRC message, 3a) that the SOP type of the received packet matches the SOP type of the pending transmission or 3b) the SOP type of the received packet is SOP with the SOP type of pending transmission being non-SOP (the latter can be disabled via the DIS_SOP_ABRTS_NON_SOP bit in the TX Control Register A (TX_CTL_A)) and 4) that the packet is not a duplicate or is a soft Reset message.

For completed transmissions that are waiting for a GoodCRC to be returned, the RX Control checks 1) that the packet is a good packet (good CRC, proper nibble alignment and no symbol errors), 2) that the packet is a soft Reset or is not a GoodCRC message, 3a) that the SOP type of the received packet matches the SOP type of the pending transmission or 3b) the SOP type of the received packet is SOP with the SOP type of pending transmission being non-SOP (the latter can be disabled via the DIS_SOP_ABRTS_NON_SOP bit in the TX Control Register A (TX_CTL_A)) and 4) that the packet is not a duplicate.

10.2.3 RX COMM

The RX Comm is comprised of the clock and data recovery (CDR), RX DES (de-serializer) (serial-to-parallel converter, 4b5b decoder, and framing detector), RX CRC32 (CRC calculator, receive timer), and other logic to detect valid packet reception.

10.2.3.1 CDR

The BMC decodes the received data and outputs the bit stream signal. This signal is applied to the input of CDR module which locks (period and phase) on to the data stream during the preamble phase and outputs the serial data and a capture strobe centered in the data window.

The CDR relies on edge-to-edge time measurement (two bit-times) during the preamble phase for period lock. An average of four successive good period measurements is used for period lock. Valid period measurement is determined by the range specified by the RX Maximum Bit Rate Bit Period Count Register (RX_BIT_PER_CNT_MAX_BR) and RX Minimum Bit Rate Bit Period Count Register (RX_BIT_PER_CNT_MIN_BR). Phase lock is achieved by comparing in-phase and quadrature data samples to determine whether the phase needs to be advanced or retarded.

10.2.3.2 RX DES (De-serializer)

The RX DES converts the received serial bit stream from the CDR into 5-bit symbols, identifies and generates start-of-packet/end-of-packet/hard and cable Reset signals, and decodes the symbols to 4b data.

Note:	Note that only valid D-codes are processed to be written to the RX Queue. An invalid/reserved code is simply dropped.

10.2.3.2.1 SOP Detection

The SOP is detected by comparing the four most recently received 5-bit symbols to the expected SOP pattern. Per the USB PD specification, detection of three of the four SOP symbols is sufficient. This is done by creating four unique groups each containing three received symbols ({a,b,c}, {a,b,d}, {a,c,d} and {b,c,d}), with each group independently compared to its respective symbols. Any successful match indicates an SOP.

There is a separate compare for each SOP type, enabled by the RX_SOP_ENABLE field in the RX Control Register B (RX_CTL_B). The results are OR'ed. The SOP type is saved and used in the packet processing (auto reply, auto response and queue status). Software is allowed to change the RX_SOP_ENABLE field at any time. The internal value is held during active receive and updated from the register during idle time.

For generation of the RX_SOP interrupts in the RX SOP Interrupt Status Register (RX_SOP_IRQ_STAT), each SOP detection is decoded but is not AND'ed with its RX_SOP_ENABLE.

10.2.3.2.2 Reset Detection

Hard and cable Resets are detected by comparing the four most recently received 5-bit symbols to the expected patterns. Per the USB PD specification, detection of three of the four symbols is sufficient. This is done by creating four unique groups each containing three received symbols ({a,b,c}, {a,b,d}, {a,c,d} and {b,c,d}), with each group independently compared to its respective symbols. Any successful match indicates a hard or cable Reset, respectively.

Cable Reset must be enabled via the EN_CABLE_RESET bit in the RX Control Register A (RX_CTL_A).

10.2.3.3 RX CRC32

The receive data CRC32 is computed by the RX CRC32 module. The same logic used for TX CRC generation is utilized to calculate the RX CRC.

The coded nibble data is streamed into the RX CRC32 one nibble at a time for CRC calculation. When the packet ends, the output of this module represents the computed CRC for the received packet. A value of 0xC704_DD7B indicates a good CRC. Detection of a valid EOP symbol latches the CRC value. The latched value is compared with the expected good CRC residue value, which is used by the RX Queue to determine if the RX Queue status should be updated to reflect valid data or not.

© 2024 Microchip Technology Inc. and its subsidiaries

10.3 PD MAC BIST

The PD MAC incorporates BIST functions as defined in the USB PD Specification. It is comprised of a TX and RX block.

The BIST TX block contains a PRBS (Pseudo Random Binary Sequence) generator, BIST pattern generation logic, and its own bit-timing logic. The SOP type used by TX BIST Test Frames is a 20-bit static vector which is created by multiplexing between the five SOP ordered sets based on a register setting. The resultant 20-bit vector is simply bit selected when the packet is transmitted.

BIST TX is entered when the BIST_EN bit in the BIST Control Register A (BIST_CTL_A) is set along with BIST_RX_EN being clear. The BIST TX mode (TX type) is set using the BIST_TX_MODE field of the BIST Control Register A (BIST_CTL_A) and is started by first using the BIST_TX_RST bit and then by using the BIST_TX_START/BIST_TX_STATUS bit of the BIST Control Register B (BIST_CTL_B). Continuous BIST transmission (modes 0, 1, 2, 3, and 5) should be stopped by first using the BIST_TX_RST bit before clearing the BIST_EN bit. It may take up to 1 bit time for the TX to stop. BIST_EN should not be cleared until after this time.

The BIST RX block contains a PRBS generator and bit error detection logic. BIST RX is used only during the BIST Receiver Test. BIST RX is entered when the BIST_EN bit in the BIST Control Register A (BIST_CTL_A) is set along with BIST_RX_EN. The BIST error counter is reset using the BIST_CLR_ERR_CNT bit of the BIST Control Register B (BIST_CTL_B).

For information on the BIST registers, refer to Section 10.4.3, "PD MAC BIST Registers," on page 148.

© 2024 Microchip Technology Inc. and its subsidiaries

10.4 Power Delivery MAC Registers

This section details the Power Delivery MAC registers.
For an overview of the entire device register map, refer to Section 4.0, "Register Map," on page 13.

TABLE 10-5: POWER DELIVERY MAC REGISTER MAP

Address	Register Name (Symbol)
1800h – 1849h	PD MAC TX Queue/FIFO (74 bytes) (See Section 10.1.1, "TX Queue" for additional info)
184Ah – 18FFh	Reserved for future expansion
1900h – 197Fh	PD MAC RX FIFO (128 bytes) (See Section 10.2.1, "RX Queue" for additional info)
1980h – 19FFh	Reserved for future expansion
1A00h	TX Control Register A (TX_CTL_A)
1A01h	TX Status Register (TX_STAT)
1A02h	TX Parameters Register C (TX_PARAM_C)
1A03h	TX Packet Length Register (TX_PKT_LEN)
1A04h	TX Parameters Register A (TX_PARAM_A)
1A05h	TX Control Register B (TX_CTL_B)
1A06h	TX Parameters Register B (TX_PARAM_B)
1A07h	TX Bit-Time Count Register (TX_BITTIME_CNT)
1A08h	TX Turnaround Time Register (TX_TA_TIME)
1A09h	TX Abort Status Register (TX_ABORT_STAT)
1A0Ah	TX Auto Response Abort Status Register (TX_AR_ABORT_STAT)
1A0Bh	TX Power Up Time Register (TX_POWER_UP_TIME)
1A0Ch	TX Power Down Time Register (TX_POWER_DOWN_TIME)
1A0Dh – 1A3Fh	Reserved for future expansion
1A40h	RX Control Register A (RX_CTL_A)
1A41h	RX Control Register B (RX_CTL_B)
1A42h	RX Maximum Bit Rate Bit Period Count Register (RX_BIT_PER_CNT_MAX_BR)
1A43h	RX Minimum Bit Rate Bit Period Count Register (RX_BIT_PER_CNT_MIN_BR)
1A44h	RX Status Register (RX_STAT)
1A45h	RX Packet Status Register (RX_PKT_STAT)
1A46h	RX tReceive Time Register (RX_TRECEIVE_TIME)
1A47h	RX BadCRC Packet Count Register (RX_BADCRC_PKT_CNT)
1A48h	RX Duplicate Packet Count Register (RX_DUP_PKT_CNT)
1A49h	RX Hard Reset Detection Window Register (RX_HR_DET_WINDOW)
1A4Ah	RX Last GoodCRC Packet High Byte Register (RX_LAST_GCRC_PKT_HI)
1A4Bh	RX Last GoodCRC Packet Low Byte Register (RX_LAST_GCRC_PKT_LO)
1A4Ch	RX Message ID Stored Register (RX_MSG_ID_STORED)
1A4Dh	RX Maximum Packet Size Register (RX_MAX_SIZE)
1A4Eh – 1A4Fh	Reserved for future expansion
1A50h	RX FIFO Read Pointer Register (RX_FIFO_RD_PTR)
1A51h	RX FIFO Read Pointer Control Bits Register (RX_FIFO_RD_PTR_CTL_BITS)
1A52h	RX FIFO Write Current Pointer Register (RX_FIFO_WR_CURRENT_PTR)
1A53h	RX FIFO Write Current Pointer Control Bits Register (RX_FIFO_WR_CURRENT_PTR_CTL_BITS)
1A54h	RX FIFO Write Head Pointer Register (RX_FIFO_WR_HEAD_PTR)
1A55h	RX FIFO Write Head Pointer Control Bits Register (RX_FIFO_WR_HEAD_PTR_CTL_BITS)
1A56h	RX FIFO Write Head Pointer Plus One Register (RX_FIFO_WR_HEAD_PTR_PLUS_ONE)

© 2024 Microchip Technology Inc. and its subsidiaries

TABLE 10-5: POWER DELIVERY MAC REGISTER MAP (CONTINUED)

Address	Register Name (Symbol)
1A57h	RX FIFO Write Head Pointer Plus One Control Bits Register (RX_FIFO_WR_HEAD_PTR_PLUS_ONE_CTL_BITS)
1A58h – 1A7Fh	Reserved for future expansion
1A80h	MAC Interrupt Status Register (MAC_IRQ_STAT)
1A81h	TX Interrupt Status Register (TX_IRQ_STAT)
1A82h	RX Interrupt Status Register (RX_IRQ_STAT)
1A83h	RX Error Interrupt Status Register (RX_ERR_IRQ_STAT)
1A84h	Power Management Interrupt Status Register (PM_IRQ_STAT)
1A85h	RX SOP Interrupt Status Register (RX_SOP_IRQ_STAT)
1A86h	TX Interrupt Enable Register (TX_IRQ_EN)
1A87h	RX Interrupt Enable Register (RX_IRQ_EN)
1A88h	RX Error Interrupt Enable Register (RX_ERR_IRQ_EN)
1A89h	Power Management Interrupt Enable and Control Register (PM_IRQ_EN)
1A8Ah	RX SOP Interrupt Enable Register (RX_SOP_IRQ_EN)
1A8Bh	Reset Control Register (RESET_CTL)
1A8Ch – 1A9Fh	Reserved for future expansion
1AA0h	BMC RX High Level Full Bit Maximum Time Register (BMC_RX_HI_FB_MAX_TIME)
1AA1h	BMC RX High Level Full Bit Minimum Time Register (BMC_RX_HI_FB_MIN_TIME)
1AA2h	BMC RX Low Level Full Bit Maximum Time Register (BMC_RX_LO_FB_MAX_TIME)
1AA3h	BMC RX Low Level Full Bit Minimum Time Register (BMC_RX_LO_FB_MIN_TIME)
1AA4h	BMC RX High Level Half Bit Maximum Time Register (BMC_RX_HI_HB_MAX_TIME)
1AA5h	BMC RX High Level Half Bit Minimum Time Register (BMC_RX_HI_HB_MIN_TIME)
1AA6h	BMC RX Low Level Half Bit Maximum Time Register (BMC_RX_LO_HB_MAX_TIME)
1AA7h	BMC RX Low Level Half Bit Minimum Time Register (BMC_RX_LO_HB_MIN_TIME)
1AA8h	BMC RX Squelch Assert Time Register (BMC_RX_SQL_ASSERT_TIME)
1AA9h	BMC RX Squelch Hold Time Register (BMC_RX_SQL_HOLD_TIME)
1AAAh – 1AAFh	Reserved for future expansion
1AB0h	BMC TX Bit-Time Count Register (BMC_TX_BITTIME_CNT)
1AB1h	BMC Transition Window Time Register (BMC_TRANSITION_WINDOW_TIME)
1AB2h – 1ABFh	Reserved for future expansion
1AC0h	BIST Control Register A (BIST_CTL_A)
1AC1h	BIST Control Register B (BIST_CTL_B)
1AC2h	BIST Error Count High Register (BIST_ERR_CNT_HI)
1AC3h	BIST Error Count Low Register (BIST_ERR_CNT_LO)
1AC4h – 1AC6h	Reserved for future expansion
1AC7h	BIST RX Status Register (BIST_RX_STAT)
1AC8h – 1BFFh	Reserved for future expansion

Note: RESERVED address space must not be written under any circumstances. Failure to heed this warning may result in untoward operation and unexpected results.

© 2024 Microchip Technology Inc. and its subsidiaries

10.4.1 PD MAC TX REGISTERS

The following sub-sections describe the various registers associated with the PD MAC TX logic.

10.4.1.1 TX Control Register A (TX_CTL_A)

Address: 1A00h Size: 8 bits

Bits	Description	Type	Default
7	**RESERVED**	RO	-
6	**RETRY_ON_LINE_BUSY** Normally hardware will abort a TX packet (including all retry attempts) if the line is busy when hardware attempts to transmit the packet. (Note that transmission of GoodCRC ACK in response to a soft Reset is an exception to this, see the DIS_SPCL_SR_GCRC_ACK bit.) Setting this bit will force hardware to not completely abort the transmission, but rather it will retry the packet up to N_RETRY_CNT times. Failure after N_RETRY_CNT times results in TX_FAILED status in the TX Interrupt Status Register (TX_IRQ_STAT) rather than a TX_ABORTED status. The following conditions will still abort the TX packet: • Hard Reset received • Cable Reset received (if enabled and the SOP type of the pending TX is SOP', or SOP'', SOP'_Debug or SOP''_Debug) • Good, non-duplicate, non-Ping, non-GoodCRC packet (including soft Reset) received with RX and TX SOP types matching, or RX SOP type equaling SOP with TX SOP type not equaling SOP (can be disabled) • Software sets the ABORT bit in the TX Control Register B (TX_CTL_B)	R/W	0b
5	**DIS_SOP_ABRTS_NON_SOP** Normally, when a SOP packet is received, a pending non-SOP packet (including wait for a GoodCRC) will be aborted. When this bit is set, a non-SOP packet will only be aborted by a packet with the same non-SOP type.	R/W	0b
4	**DIS_SPCL_SR_GCRC_ACK** Disable special treatment of GoodCRC ACK in response to soft Reset. By default, in Auto Response mode a line busy condition will not abort GoodCRC ACK transmission in response to soft Reset reception. Setting this bit will disable this behavior and instead GoodCRC ACK transmission for soft Reset will be processed the same as GoodCRC ACK for other packets. **Note:** When this bit is set, the WAIT4LINE_IDLE bit will affect GoodCRC ACK for soft Reset as well.	R/W	0b

© 2024 Microchip Technology Inc. and its subsidiaries

Bits	Description	Type	Default
3	**WAIT4LINE_IDLE** Normally hardware will abort a TX packet (including all retry attempts) if the line is busy when hardware attempts to transmit the packet. (Note that transmission of GoodCRC ACK in response to soft Reset is an exception to this, see the DIS_SPCL_SR_GCRC_ACK bit.) Setting this bit will force hardware to not abort the transmission but rather wait until the line becomes idle and then transmit the message. The RETRY_ON_LINE_BUSY option has lower priority then this function. The following conditions will still abort the TX packet: • Hard Reset received • Cable Reset received (if enabled and the SOP type of the pending TX is SOP', or SOP'', SOP'_Debug or SOP''_Debug) • Good, non-duplicate packet, non-Ping, non-GoodCRC (including soft Reset) received with RX and TX SOP types matching or RX SOP type equaling SOP with TX SOP type not equaling SOP (can be disabled) • Software sets the ABORT bit in the TX Control Register B (TX_CTL_B)	R/W	0b
2	**EN_AUTO_RSP_MODE** Enable automatic sending of GoodCRC message and BIST Error Count message by hardware. 0: Auto GoodCRC Message disabled (default) 1: Auto GoodCRC Message enabled **Note:** Disabling Auto Response mode will also disable automatic retry by hardware, i.e., hardware will ignore the N_RETRY_CNT field of the TX Parameters Register C (TX_PARAM_C).	R/W	0b
1	**EN_FMQ** Enable FIFO mode queuing on the TX Queue's write interface. 0: Buffer Mode - TX Queue is accessed like a buffer/CSR (Default) 1: FIFO Mode	R/W	0b
0	**EN_RMDP** Enable Raw mode data processing. 0: Automatic Mode data processing (default) 1: Enable Raw mode data processing	R/W	0b

10.4.1.2 TX Status Register (TX_STAT)

Address: 1A01h Size: 8 bits

Bits	Description	Type	Default
7	**RESERVED**	RO	-

Bits	Description	Type	Default
6:4	**N_HW_RETRIES** Number of attempts by hardware to send a message successfully. This field is automatically cleared when the GO bit in the TX Control Register B (TX_CTL_B) is set. This field is meaningful only if a TX was successful. It is informational only. 0: Initial message was successful. This value must be correlated with the TX_ABORTED bit. If a TX message was aborted, this bit is meaningless. >0: Number of retries performed by the device. The maximum value depends on the N_RETRY_CNT field in the TX Parameters Register C (TX_PARAM_C) register.	RO	000b
3:1	**RESERVED**	RO	-
0	**TX_ACTIVE** Transmitter is active. 0: Transmitter is idle 1: Transmitter is active Software can monitor this bit to determine if transmission is in progress. De-assertion of this bit does not imply successful message transmission, only that the transmitter is no longer active and has stopped transmitting.	RO	0b

10.4.1.3 TX Parameters Register C (TX_PARAM_C)

Address: 1A02h Size: 8 bits

Bits	Description	Type	Default
7	**PORT_DATA_ROLE** This field is used as the Port Data Role field for the hardware generated packet header for packets that use SOP signaling. 0: UFP 1: DFP **Note:** SOP' and SOP'' always send a 0 bit for the Port Data Role.	R/W	0b
6:4	**N_RETRY_CNT** Number of retries allowed. Set this to zero to disable automatic hardware retry (i.e., when software will take care of retries). If N_RETRY_CNT is set to zero but hardware is expected to wait for GoodCRC, the EXPECT_GOODCRC bit should be set in the TX Parameters Register A (TX_PARAM_A), otherwise TX will be considered complete as soon as packet transmission is complete. **Note:** Hard and cable resets are not automatically retried since there is no feedback to indicate a failure.	R/W	000b
3	**CABLE_PLUG** This field is used as the Cable Plug field for the hardware generated packet header for packets that use SOP' and SOP'' signaling. 0: DFP or UFP 1: Cable Plug	R/W	0b

© 2024 Microchip Technology Inc. and its subsidiaries

Bits	Description	Type	Default
2	**PORT_POWER_ROLE** This field is used as the Port Power Role field for the hardware generated packet header for packets that use SOP signaling. 0: Sink 1: Source	R/W	0b
1:0	**RESERVED**	RO	-

10.4.1.4 TX Packet Length Register (TX_PKT_LEN)

Address: 1A03h Size: 8 bits

Bits	Description	Type	Default
7:6	**RESERVED**	RO	-
5:0	**PKT_LEN** Queued packet length in bytes. Hardware uses this value in Auto mode to determine when to insert the CRC. PKT_LEN = bytes in header + bytes in data objects **Note:** This applies to Auto mode queue only and not to Raw mode queue. Raw mode queue has a special code to insert CRC and terminate the transmission. **Note:** A value of '0' is invalid for this field.	R/W	000000b

10.4.1.5 TX Parameters Register A (TX_PARAM_A)

Address: 1A04h Size: 8 bits

Bits	Description	Type	Default
7	**EXPECT_GOODCRC** This bit is used when the N_RETRY_CNT field in the TX Parameters Register C (TX_PARAM_C) is set to zero but hardware is expected to wait for GoodCRC in response to a TX message. If N_RETRY_CNT is non-zero and EN_AUTO_RSP_MODE in the TX Control Register A (TX_CTL_A) is set, then hardware automatically waits for GoodCRC and this bit has no effect.	R/W	0b

© 2024 Microchip Technology Inc. and its subsidiaries

Bits	Description	Type	Default
6:4	**TX_SOP_SELECT** This field selects the SOP used for normal TX packets, for Returned BIST Counters packets (in response to RX BIST Test Frames) and for TX BIST Test Frames. This value is also used to verify the expected SOP type in the GoodCRC response when auto retry is enabled. 000: SOP 001: SOP' 010: SOP" 011: SOP'_Debug 100: SOP"_Debug 101 - 111: Reserved **Note:** For Auto Retry mode, it is assumed that the expected SOP type is also enabled in the RX Control Register B (RX_CTL_B).	R/W	000b
3	**EN_FWTX** Enable software issued transmission. This bit is effective only at the moment the GO bit is set by software and is intended to cover race conditions where it is not possible for software to back off from setting the GO bit in response to a valid RX. This bit is automatically held cleared by hardware if the RX Interrupt Status Register (RX_IRQ_STAT) indicates reception of a hard Reset or a cable Reset, or if there is any data in the RX FIFO. Therefore, software must set it prior to each transmission it wants to issue. When this bit is cleared, a software issued transmission will be aborted. **Note:** This is not an Abort bit. Clearing this bit will have no effect on a transmission that has already been issued to hardware. Such transmissions will be aborted automatically by hardware as appropriate. To abort a transmission in progress, use the ABORT bit in the TX Control Register B (TX_CTL_B). **Note:** Setting of this bit does not prevent hardware issued transmissions. **Note:** This bit is reset by assertion of PD_RESET.	R/W	0b
2:0	**MSG_ID** Message ID. This value is used to verify the expected message ID in the GoodCRC response. **Note:** Hardware will not insert this value into the TX message header. For proper normal operation, software must program the same value in bits[11:9] of the message header. **Note:** Software must set this to zero when it processes a hard Reset, cable Reset or soft Reset.	R/W	000b

© 2024 Microchip Technology Inc. and its subsidiaries

10.4.1.6 TX Control Register B (TX_CTL_B)

Address: 1A05h Size: 8 bits

Bits	Description	Type	Default
7:6	**RESERVED**	RO	-
5	**TX_CABLE_RESET** Setting this bit to 1 together with the GO bit will cause hardware configured for Auto mode data processing to transmit a cable Reset. Any data in the TX Queue and related registers are ignored. This bit is not applicable to Raw mode data processing since cable Reset packets can be explicitly specified in the TX Queue. It is ignored for Raw mode. This bit can only be set if the GO bit is not currently set. The TX_HARD_RESET bit has precedence and if set along with this bit, this bit will not set. This bit is cleared by hardware at end of packet transmission. This bit is reset by assertion of PD_RESET. Software can only write '1' to this bit, and therefore cannot clear it once set. **Note:** Cable Reset is not automatically retried (there is no feedback to indicate a failure). It is up to software to perform cable Reset retries. **Note:** This bit will be cleared upon completion of any packet transmission, so it should be set only after the GO bit is cleared after completion of the prior transmission.	W1S/SC	0b
4	**OK_TO_TX** Channel is idle and it is OK to transmit. Software should monitor this bit before setting the GO bit. 0: Software should not set the GO bit 1: Software can set the GO bit The following conditions will cause hardware to set this bit to 0: • BMC line idle timer indicating line is busy. • Hardware may be processing an automatic response to a received packet.	RO	1b
3	**RST_TXQ_FIFO_WRI_PTR** Setting this bit will reset the TX Queue's write interface FIFO pointer. When using FIFO mode queuing, software must always write a '1' to this bit prior to putting data in the FIFO. Hardware does not latch this bit and it will read back as zero. Hardware may automatically reset the pointer when the GO bit is cleared (i.e., hardware is done with current transmission).	WO	0b

© 2024 Microchip Technology Inc. and its subsidiaries

Bits	Description	Type	Default
2	**TX_HARD_RESET** Setting this bit to '1' together with the GO bit will cause hardware configured for Auto mode data processing to transmit a hard Reset. Any data in the TX Queue and related registers are ignored. This bit is not applicable to Raw mode data processing since a hard Reset packet can be explicitly specified in the TX Queue. It is ignored for Raw mode. This bit can only be set if the GO bit is not currently set. This bit is cleared by hardware at end of packet transmission. This bit is reset by assertion of PD_RESET. Software can only write '1' to this bit and therefore can not clear it once set. **Note:** Hard Reset is not automatically retried (there is no feedback to indicate a failure). It is up to software to perform hard Reset retries. **Note:** This bit will be cleared upon completion of any packet transmission, so it should be set only after the GO bit is cleared after completion of the prior transmission.	W1S/SC	0b
1	**ABORT** Setting this bit will abort the current transmission in progress as soon as possible. Writing a '0' has no effect. Hardware does not latch this bit, and it will read back as zero. Hardware will finish the current nibble transmission, send EOP and then terminate the transmission. If this bit is set during the preamble phase, then the current bit of the preamble will be completed prior to termination. Software should use the TX_EOP status bit in the TX Interrupt Status Register (TX_IRQ_STAT) to determine when the current packet has been terminated.	WO	0b
0	**GO** Writing a '1' to this bit will: • Start transmission of the packet in the TX queue on to the wire or: • Send hard Reset if the TX_HARD_RESET bit of this register is set and data processing mode is set to Auto (i.e., the EN_RMDP bit in the TX Control Register A (TX_CTL_A) is not set). • Send cable Reset if the TX_CABLE_RESET bit of this register is set and data processing mode is set to Auto (i.e., the EN_RMDP bit in the TX Control Register A (TX_CTL_A) is not set). Hardware will clear this bit when transmission is complete. This bit is reset by assertion of PD_RESET. Software can only write '1' to this bit, and therefore cannot clear it once set. Clearing of this bit by hardware does not indicate the message was sent successfully. Hardware may detect bus collision and abort transmission. In this case, the TX_ABORTED bit in the TX Interrupt Status Register (TX_IRQ_STAT) will be set and an interrupt to MCU will be generated.	W1S/SC	0b

© 2024 Microchip Technology Inc. and its subsidiaries

10.4.1.7 TX Parameters Register B (TX_PARAM_B)

Address: 1A06h Size: 8 bits

Bits	Description	Type	Default
7	**RESERVED**	RO	-
6:0	**PREAMBLE_LEN** Number of preamble bits to send. Range: 1-127, specification: 64d (default) A value of 0 is invalid, and the hardware does not check for validity. Software should use the default value for normal operation. Setting this field to an odd value will cause a violation of the USB PD Specification which states, “The preamble shall start with a ‘0’ and shall end with a ‘1’.” An odd value will cause the preamble to start with a value of 0, but it will also end in a value of 0. This may or may not lead to functional issues. This field should be set to an even value to remain spec compliant.	R/W	1000000b

10.4.1.8 TX Bit-Time Count Register (TX_BITTIME_CNT)

Address: 1A07h Size: 8 bits

Bits	Description	Type	Default
7:0	**BIT_TIME_CNT** Bit time counter value. The TX logic uses this value to determine the bit time for transmission (nominal bit rate is 300Kbps). This register can be used to adjust bit time for testing purposes (adjusting bitrate). Count value is based on clock frequency and is given by: ((Clock Freq KHz / Bit Rate Kbps) - 1) i.e., Clock Frequency = 48000KHz (48MHz) Nominal Bit Rate = 300 Kbps BIT_TIME_CNT = (48000 / 300) - 1 = 159	R/W	00h

10.4.1.9 TX Turnaround Time Register (TX_TA_TIME)

Address: 1A08h Size: 8 bits

This register controls the IFG timer.

Bits	Description	Type	Default
7:6	**RESERVED**	RO	-

Bits	Description	Type	Default
5:0	**TA_TIME** Turnaround time in µs. Range: 1-63, specification: 25 µs A value of 0 is invalid and hardware does not check for validity. Hardware uses a free running 1us pulse generator, thus, the value of this field should be 1 more than desired to ensure the minimum time (26d).	R/W	010101b

10.4.1.10 TX Abort Status Register (TX_ABORT_STAT)

Address: 1A09h Size: 8 bits

This field is used in conjunction with the TX_ABORTED interrupt and provides details for why the TX was aborted. Bits in this register are sticky, i.e., once any bit is set by hardware this field cannot be updated by hardware until software clears the field.

Note: Bits in this register are set by hardware and must be cleared by software. The bits are not mutually exclusive, i.e., more than one bit may be set depending on the circumstance.

Bits	Description	Type	Default
7	**TX_ABORT_STAT[7]** While waiting for GoodCRC, TX aborted due to protocol error (i.e., received other than GoodCRC or Ping message while waiting for GoodCRC or receiving a hard or cable Reset.)	R/W1C	0b
6	**TX_ABORT_STAT[6]** During a software issued TX, TX was aborted due to RX (including hard or cable Reset) while waiting for bus turnaround or waiting for line to go idle.	R/W1C	0b
5	**TX_ABORT_STAT[5]** Auto retry aborted due to RX (including hard or cable Reset) while waiting for bus turnaround or while waiting for line to go idle.	R/W1C	0b
4	**TX_ABORT_STAT[4]** Auto retry aborted due to line being busy after bus turnaround.	R/W1C	0b
3	**RESERVED**	RO	-
2	**TX_ABORT_STAT[2]** During software issued TX, line was busy after bus turnaround.	R/W1C	0b
1	**TX_ABORT_STAT[1]** Software issued abort while software issued TX was in process.	R/W1C	0b
0	**TX_ABORT_STAT[0]** Software issued GO with TX disabled.	R/W1C	0b

10.4.1.11 TX Auto Response Abort Status Register (TX_AR_ABORT_STAT)

Address: 1A0Ah Size: 8 bits

This field is used in conjunction with the AUTO_RSP_ABORTED interrupt and provides details for why the TX was aborted. Bits in this register are sticky, i.e., once any bit is set by hardware this field cannot be updated by hardware until software clears the field.

Note: Bits in this register are set by hardware and must be cleared by software. The bits are not mutually exclusive, i.e., more than one bit may be set depending on the circumstance.

© 2024 Microchip Technology Inc. and its subsidiaries

Bits	Description	Type	Default
7	**RESERVED**	RO	-
6	**TX_AR_ABORT_STAT[6]** Auto response aborted due to RX (including hard or cable Reset) while waiting for bus turnaround or while waiting for line to go idle.	R/W1C	0b
5:4	**RESERVED**	RO	-
3	**TX_AR_ABORT_STAT[3]** Line was busy after bus turnaround time during auto response.	R/W1C	0b
2	**RESERVED**	RO	-
1	**TX_AR_ABORT_STAT[1]** Software issued abort while auto response was in process.	R/W1C	0b
0	**RESERVED**	RO	-

10.4.1.12 TX Power Up Time Register (TX_POWER_UP_TIME)

Address: 1A0Bh Size: 8 bits

Bits	Description	Type	Default
7:0	**TX_POWER_UP_TIME** TX Power Up Time before transmitting (unit is 8 clock cycles). Range: 0-255 (actual time is 5 clocks larger). The analog requires a minimum time of 5 µs to power up. Count value is based on clock frequency and is given by: TX_POWER_UP_TIME = power up time µs x Clock Freq MHz / 8 i.e., Clock Frequency = 48MHz power up time = 5 µs TX_POWER_UP_TIME = 5 x 48 / 8 = 30	R/W	00h

© 2024 Microchip Technology Inc. and its subsidiaries

10.4.1.13 TX Power Down Time Register (TX_POWER_DOWN_TIME)

Address: 1A0Ch Size: 8 bits

Bits	Description	Type	Default
7:0	**TX_POWER_DOWN_TIME** TX Power Down Time after transmitting (unit is 8 clock cycles). Range: 0-255 (actual time is 2 clocks larger). The analog requires a minimum time of 1 µs before powering down. Count value is based on clock frequency and is given by: TX_POWER_DOWN_TIME = power down time µs x Clock Freq MHz/8 i.e., Clock Frequency = 48 MHz power down time = 1 µs TX_POWER_DOWN_TIME = 1 x 48 / 8 = 6	R/W	00h

10.4.2 PD MAC RX REGISTERS

The following sub-sections describe the various registers associated with the PD MAC RX logic.

10.4.2.1 RX Control Register A (RX_CTL_A)

Address: 1A40h Size: 8 bits

© 2024 Microchip Technology Inc. and its subsidiaries

Bits	Description	Type	Default
7:6	**RESERVED**	RO	-
5	**EN_LOOPBACK** Enable Loopback. This bit allows the MAC to receive its own transmission. **Note:** Loopback happens at the pin where TX and RX are connected together.	R/W	0b
4	**EN_RCV** Enable Receiver. Software should set this bit when it is done configuring the receiver. Setting this bit will enable the receiver to start normal operation. If this bit is set while receive activity is in progress, it will take effect after the current receive activity is over. If this bit is cleared while a receive is being processed, it will take effect after the current receive is finished. This bit will be automatically cleared by hardware upon reception of hard Reset or a cable Reset to prevent normal packet reception. After POR or SW_RESET, hard and cable Reset reception is disabled until EN_RCV is set. Thereafter, clearing of EN_RCV (by software or hardware) has no impact on reception of a hard or cable Reset, i.e., hardware will process the hard or cable Reset even with EN_RCV cleared. If software wishes to re-initialize receive timing parameters after EN_RCV has been set once, it must first reset the UPD_MAC_v2 using SW_RESET. This bit is not reset by assertion of PD_RESET.	R/W	0b
3	**RST_RECEIVER** Setting this bit will reset the receiver queue. Software should set this bit if the receiver hardware may be out of sync with software. Hardware latches this bit, so it must be cleared by software to resume receiver operation. Receiver hardware is also reset when PD_RESET bit in RESET_CTL register is set.	R/W	0b
2	**EN_CRC_RCV_TMR** Enable CRCReceiveTimer. 0: CRCReceiveTimer disabled (default) 1: CRCReceiveTimer enabled This bit is used by software only when it is not using Auto Retry mode. When auto retry is enabled (EN_AUTO_RSP_MODE in the TX Control Register A (TX_CTL_A) is set and N_RETRY_CNT is non-zero) or when the transmitter is set to wait for the GoodCRC message (EXPECT_GOODCRC is set and N_RETRY_CNT is zero), the CRCReceiveTimer is automatically enabled in hardware. If GoodCRC message is not received prior to timer expiration, then an interrupt will be generated. CRC_RCV_TIMEOUT bit in the TX Interrupt Status Register (TX_IRQ_STAT) will be set. If auto retry and wait for GoodCRC are disabled, the software can set this bit to enable CRCReceiveTimer prior to starting transmission to help time tReceive. Once enabled, the timer will start automatically at the end of transmission; however, software must disable the timer when a GoodCRC message is received. If not disabled, timer expiration will generate an interrupt. Once expired, the CRCReceiveTimer remains expired until the start of another packet transmission when it reloads. This timer can also be used for BIST transmissions as the BISTReceiveErrorTimer.	R/W	0b

© 2024 Microchip Technology Inc. and its subsidiaries

Bits	Description	Type	Default
1	**EN_SMBUS_MODE** Enable SMBus block read FIFO format. 0: First location in packet is status, second location is packet length 1: First location in packet is packet length + 1, second location is status	R/W	0b
0	**EN_CABLE_RESET** Enable Cable Reset Detection. 0: Cable Reset Detection (default) 1: Cable Reset Detection enabled	R/W	0b

10.4.2.2 RX Control Register B (RX_CTL_B)

Address: 1A41h Size: 8 bits

Bits	Description	Type	Default
7	**RESERVED**	RO	-
6:2	**RX_SOP_ENABLE** SOP Types enabled to be received. Includes RX BIST Test Frames. Bit 2 - SOP Bit 3 - SOP' Bit 4 - SOP'' Bit 5 - SOP'_Debug Bit 6 - SOP''_Debug Software is allowed to change the field at any time. An internal copy is held during active receive and updated from the register during idle time	R/W	00001b
1:0	**RESERVED**	RO	-

10.4.2.3 RX Maximum Bit Rate Bit Period Count Register (RX_BIT_PER_CNT_MAX_BR)

Address: 1A42h Size: 8 bits

The value of this register, together with the value of the RX Minimum Bit Rate Bit Period Count Register (RX_BIT_PER_CNT_MIN_BR), is used by the CDR to determine valid bit time (also referenced as bit period) of the RX signal.

RX_BIT_PER_CNT_MIN_BR > valid bit time > RX_BIT_PER_CNT_MAX_BR.

Bits	Description	Type	Default
7:0	**RX_BIT_PER_CNT_MAX_BR** Bit period count at maximum bit rate. = (((clock_freq_KHz / max_bit_rate_Kbps) * (100 - tolerance) / 100) - 1) WARNING: If macros are defined in C code, then math must be arranged so that integer overflow does not occur.	R/W	00h

10.4.2.4 RX Minimum Bit Rate Bit Period Count Register (RX_BIT_PER_CNT_MIN_BR)

Address: 1A43h Size: 8 bits

© 2024 Microchip Technology Inc. and its subsidiaries

The value of this register, together with value of the RX Maximum Bit Rate Bit Period Count Register (RX_BIT_PER_CNT_MAX_BR), is used by the CDR to determine valid bit-time (also referenced as bit-period) of the RX signal.

RX_BIT_PER_CNT_MIN_BR > valid bit time > RX_BIT_PER_CNT_MAX_BR.

Bits	Description	Type	Default
7:0	**RX_BIT_PER_CNT_MIN_BR** Bit period count at minimum bit rate. = (((clock_freq_KHz / min_bit_rate_Kbps) * (100 + tolerance) / 100) - 1) WARNING: If macros are defined in C code, then math must be arranged so that integer overflow does not occur.	R/W	00h

10.4.2.5 RX Status Register (RX_STAT)

Address: 1A44h Size: 8 bits

Bits	Description	Type	Default
7:2	**RESERVED**	RO	-
1	**RX_IN_PROCESS** Receiver is active. Hardware is receiving a packet, i.e., line is busy and transmitter is not active.	RO	0b
0	**LINE_STATE** 0: Line is idle 1: Line is busy (BMC line idle timer indicating line is busy) If this bit is '1', a receive might be in progress and software should wait for the message reception to complete. If it is '0', software may set the GO bit. Hardware will take further action until the very last possible moment to avoid bus contention. Bus contention is still possible and not 100% avoidable. In cases where hardware takes preventative measures to avoid bus contention, the TX packet will be aborted. Software will be informed of this via an interrupt and setting of the TX_ABORTED bit in the TX Interrupt Status Register (TX_IRQ_STAT).	RO	0b

10.4.2.6 RX Packet Status Register (RX_PKT_STAT)

Address: 1A45h Size: 8 bits

This register is applicable only when using Auto-Response/Retry modes. This register is used in conjunction with the following bits to provide additional information regarding the status of a received packet:

- RX_DONE bit in the RX Interrupt Status Register (RX_IRQ_STAT)
- RX_PCOL_ERROR bit in the RX Error Interrupt Status Register (RX_ERR_IRQ_STAT)
- RX_PKT_DROPPED bit in the RX Error Interrupt Status Register (RX_ERR_IRQ_STAT)
- RX_BUF_OVR_RUN bit in the RX Error Interrupt Status Register (RX_ERR_IRQ_STAT)

Bits in this register are sticky, i.e., once any bit is set by hardware this field cannot be updated by hardware until software clears the field.

A value of 0x00 indicates no errors, while a value of 0xFF indicates that the packet status is currently unknown. Other values are interpreted as specified in the bit definitions for this register.

© 2024 Microchip Technology Inc. and its subsidiaries

Note: There is no status for having received a GoodCRC message with matching MSG_ID. Successful completion of a TX is indication that a valid GoodCRC ACK was received.

Note: Bits in this register are set by hardware and must be cleared by software. The bits are not mutually exclusive, i.e., more than one bit may be set depending on the circumstance.

Bits	Description	Type	Default
7	**RESERVED**	RO	-
6	**RX_PKT_STAT[6]** ODD_NIBBLES. Received packet dropped because it had an odd number of nibbles in data phase. Not set if RX_PKT_STAT[3] (RX_OVER_SIZE) is set regardless of bad CRC, symbol errors or odd nibbles. RX_BAD_PKT interrupt is asserted.	R/W1C	0b
5	**RX_PKT_STAT[5]** SYM_ERROR. There was a symbol error in packet but BAD_CRC was not reported. Not set if RX_PKT_STAT[3] (RX_OVER_SIZE) is set regardless of bad CRC, symbol errors or odd nibbles. RX_BAD_PKT interrupt is asserted.	R/W1C	0b
4	**RX_PKT_STAT[4]** RX_FIFO_FULL. Received packet had to be dropped because the FIFO was full, either at SOP or during data. RX_BUF_OVR_RUN interrupt is asserted.	R/W1C	0b
3	**RX_PKT_STAT[3]** RX_OVER_SIZE. Received packet had to be dropped because it was larger than the maximum size set in the RX Maximum Packet Size Register. RX_BAD_PKT interrupt is asserted.	R/W1C	0b
2	**RX_PKT_STAT[2]** PCOL_ERROR. Received other than GoodCRC or Ping message when GoodCRC was expected. RX_PCOL_ERROR interrupt is asserted.	R/W1C	0b
1	**RX_PKT_STAT[1]** DUPLICATE_PACKET. Applicable to Auto Response mode. RX_PKT_-DROPPED interrupt is asserted.	R/W1C	0b
0	**RX_PKT_STAT[0]** BAD_CRC. RX packet had bad CRC. RX_BAD_PKT interrupt is asserted. This bit is also forced set if symbol error or odd nibble count occurs. It is not set if RX_PKT_STAT[3] (RX_OVER_SIZE) is set, regardless of bad CRC, symbol errors or odd nibbles.	R/W1C	0b

10.4.2.7 RX tReceive Time Register (RX_TRECEIVE_TIME)

Address: 1A46h Size: 8 bits

© 2024 Microchip Technology Inc. and its subsidiaries

Bits	Description	Type	Default
7:0	**TRECEIVE** CRCReceiveTimer timeout value (tReceive) in 10's of micro seconds. Timeout value = field value * 10 (µs) Range: 0-255, specification: 900-1100 µs (90-110) **Note:** A value of 0 is invalid and hardware does not check for validity. **Note:** Hardware uses a free running 1 µs pulse generator, thus, this CRCReceiveTimer may be 1 µs less than that expected. **Note:** Reset value is programmed to be 1000 µs (+/- 2%).	R/W	64h

10.4.2.8 RX BadCRC Packet Count Register (RX_BADCRC_PKT_CNT)

Address: 1A47h Size: 8 bits

This register keeps track of the number of packets received with bad CRC (any packet with valid SOP but bad CRC or invalid EOP or symbol error). This register is for debug purpose only.

If enabled, an interrupt can be generated when the count of this register reaches 128.

Bits	Description	Type	Default
7:0	**BADCRC_PKT_CNT** Number of bad packets received, i.e., with Bad CRC or invalid EOP or symbol error. When the value of this register becomes greater than 127, the DBG_EVENT bit in the RX Interrupt Status Register (RX_IRQ_STAT) will be set. Any write to this register will clear all bits. **Note:** This register is not affected by packets received during BIST Receiver Test. All these packets will be corrupted.	R/WAC	00h

10.4.2.9 RX Duplicate Packet Count Register (RX_DUP_PKT_CNT)

Address: 1A48h Size: 8 bits

© 2024 Microchip Technology Inc. and its subsidiaries

This register keeps track of the number of duplicate packets received. It is applicable only when Automatic Response mode is enabled. This register is for debug purposes only, and hardware does not use the value for anything.

If enabled, an interrupt can be generated when the count of this register reaches 128.

Bits	Description	Type	Default
7:0	**DUP_PKT_CNT** Number of duplicate packets received. Applicable when Auto Response mode is enabled. When the value of this register becomes greater than 127, the DBG_EVENT bit in the RX Interrupt Status Register (RX_IRQ_STAT) will be set. Any write to this register will clear all bits.	R/WAC	00h

10.4.2.10 RX Hard Reset Detection Window Register (RX_HR_DET_WINDOW)

Address: 1A49h Size: 8 bits

Bits	Description	Type	Default
7	**RESERVED**	RO	-
6:0	**RX_HR_DET_WINDOW** Value of hard Reset detection window in number of bits. This field determines when a detected hard Reset or cable Reset will be considered valid.	R/W	1011110b

10.4.2.11 RX Last GoodCRC Packet High Byte Register (RX_LAST_GCRC_PKT_HI)

Address: 1A4Ah Size: 8 bits

Bits	Description	Type	Default
7:0	**RX_LAST_GCRC_PKT_HI** Bits [15:8] of received GoodCRC message. This register is only valid when auto retry is enabled. Since GoodCRC message in Auto Retry mode is not stored in the RX queue, this register provides a means for software to examine the last GoodCRC message received.	RO	00h

10.4.2.12 RX Last GoodCRC Packet Low Byte Register (RX_LAST_GCRC_PKT_LO)

Address: 1A4Bh Size: 8 bits

© 2024 Microchip Technology Inc. and its subsidiaries

Bits	Description	Type	Default
7:0	**RX_LAST_GCRC_PKT_LO** Bits [7:0] of received GoodCRC message. This register is only valid when auto retry is enabled. Since GoodCRC message in Auto Retry mode is not stored in the RX queue, this register provides a means for software to examine the last GoodCRC message received.	RO	00h

10.4.2.13 RX Message ID Stored Register (RX_MSG_ID_STORED)

Address: 1A4Ch Size: 8 bits

This register indicates if a last message ID was stored for each SOP type. A write to the appropriate bit will clear the last stored message ID for the SOP type indicated. When cleared, the next packet received for the SOP type will not be considered a duplicate. Software should clear the appropriate bit when it processes a soft Reset.

Bits in this register are set by hardware and must be cleared by software.

This register is also cleared when software issues a SW_RESET or PD_RESET via the Reset Control Register (RESET_CTL).

Bits	Description	Type	Default
7:5	**RESERVED**	RO	-
4:0	**RX_MSG_ID_STORED** This field indicates that a last message ID was stored for the SOP type. Bit 0: SOP Bit 1: SOP' Bit 2: SOP" Bit 3: SOP'_Debug Bit 4: SOP"_Debug	W1C	00000b

10.4.2.14 RX Maximum Packet Size Register (RX_MAX_SIZE)

Address: 1A4Dh Size: 8 bits

The value of this register sets the maximum receive packet size, including the 4 bytes of CRC.

Bits	Description	Type	Default
7:0	**RX_MAX_SIZE** Maximum receive packet size including the 4 byte CRC.	R/W	22h

10.4.2.15 RX FIFO Read Pointer Register (RX_FIFO_RD_PTR)

Address: 1A50h Size: 8 bits

This register contains the RX FIFO read pointer. Software may update this register to flush a packet based on the known packet length and starting point.

Software must keep the RX FIFO Read Pointer Control Bits Register coherent with this register if software is to update this register.

In order to maintain coherency, writes to this register are held in a temporary register and are transferred to the actual register when the RX FIFO Read Pointer Control Bits Register is written.

© 2024 Microchip Technology Inc. and its subsidiaries

Bits	Description	Type	Default
7	**RESERVED**	RO	-
6:0	**RX_FIFO_RD_PTR** This field contains the RX FIFO read pointer.	R/W	0000000b

10.4.2.16 RX FIFO Read Pointer Control Bits Register (RX_FIFO_RD_PTR_CTL_BITS)

Address: 1A51h Size: 8 bits

This register contains the auxiliary control bits of the RX FIFO read pointer. Software must keep these bits coherent with the RX FIFO Read Pointer if software is to update the latter.

Bits	Description	Type	Default
7	**RX_FIFO_EMPTY** This field indicates that the RX FIFO is empty (RX FIFO Write Head Pointer equals the RX FIFO Read Pointer.)	RO	1b
6:2	**RESERVED**	RO	-
1	**RX_FIFO_RD_PTR_AT_TOP** This field indicates that the RX FIFO read pointer is at the top of the RAM (location 127).	RO	0b
0	**RX_FIFO_RX_PTR_WRAP** This field toggles each time the RX FIFO read pointer wraps past the top of the RAM (location 127). If software updates the RX FIFO read pointer such that it wraps, this bit must be toggled.	R/W	0b

© 2024 Microchip Technology Inc. and its subsidiaries

10.4.2.17 RX FIFO Write Current Pointer Register (RX_FIFO_WR_CURRENT_PTR)

Address: 1A52h Size: 8 bits

This register contains the RX FIFO write current pointer. This pointer indicates where the next received byte of data will be stored. This register is for debug and test purposes only and should not normally be written.

Software must maintain coherency between this and the other Write Pointer Registers.

There is no hardware holding register to maintain write coherency between this and the other Write Pointer Registers. It is assumed that this register is only written while there is no active receive.

Bits	Description	Type	Default
7	**RESERVED**	RO	-
6:0	**RX_FIFO_WR_CURRENT_PTR** This field contains the RX FIFO write current pointer.	R/W	0000000b

10.4.2.18 RX FIFO Write Current Pointer Control Bits Register (RX_FIFO_WR_CURRENT_PTR_CTL_BITS)

Address: 1A53h Size: 8 bits

This register contains the auxiliary control bits of the RX FIFO write current pointer. This register is for debug and test purposes only and should not normally be written.

Software must maintain coherency between this and the other Write Pointer Registers.

There is no hardware holding register to maintain write coherency between this and the other Write Pointer Registers. It is assumed that this register is only written while there is no active receive.

Bits	Description	Type	Default
7	**RX_FIFO_FULL** This field indicates that the RX FIFO is full (RX FIFO write current pointer equals the RX FIFO read pointer.)	RO	0b
6:2	**RESERVED**	RO	-
1	**RX_FIFO_WR_CURRENT_PTR_AT_TOP** This field indicates that the RX FIFO write current pointer is at the top of the RAM (location 127).	RO	0b
0	**RX_FIFO_WR_CURRENT_PTR_WRAP** This field toggles each time the RX FIFO write current pointer wraps past the top of the RAM (location 127).	R/W	0b

10.4.2.19 RX FIFO Write Head Pointer Register (RX_FIFO_WR_HEAD_PTR)

Address: 1A54h Size: 8 bits

This register contains the RX FIFO write head pointer. This pointer indicates where the next received packet starts. This register is for debug and test purposes only and should not normally be written.

Software must maintain coherency between this and the other Write Pointer Registers.

© 2024 Microchip Technology Inc. and its subsidiaries

There is no hardware holding register to maintain write coherency between this and the other Write Pointer Registers. It is assumed that this register is only written while there is no active receive.

Bits	Description	Type	Default
7	**RESERVED**	RO	-
6:0	**RX_FIFO_WR_HEAD_PTR** This field contains the RX FIFO write head pointer.	R/W	0000000b

10.4.2.20 RX FIFO Write Head Pointer Control Bits Register (RX_FIFO_WR_HEAD_PTR_CTL_BITS)

Address: 1A55h Size: 8 bits

This register contains the auxiliary control bits of the RX FIFO write head pointer. This register is for debug and test purposes only and should not normally be written.

Software must maintain coherency between this and the other Write Pointer Registers.

There is no hardware holding register to maintain write coherency between this and the other Write Pointer Registers. It is assumed that this register is only written while there is no active receive.

Bits	Description	Type	Default
7	**RX_FIFO_NO_ROOM_FOR_HEADER** This field indicates that the RX FIFO has no space for the RX header (status and length) (RX FIFO write head pointer equals the RX FIFO read pointer or RX FIFO write head pointer plus one equals the RX FIFO read pointer).	RO	0b
6:3	**RESERVED**	RO	-
2	**RX_FIFO_WR_HEAD_PTR_AT_2ND_FROM _TOP** This field indicates that the RX FIFO write head pointer is one below the top of the RAM (location 126).	RO	0b
1	**RX_FIFO_WR_HEAD_PTR_AT_TOP** This field indicates that the RX FIFO write head pointer is at the top of the RAM (location 127).	RO	0b
0	**RX_FIFO_WR_HEAD_PTR_WRAP** This field toggles each time the RX FIFO write head pointer wraps past the top of the RAM (location 127).	R/W	0b

10.4.2.21 RX FIFO Write Head Pointer Plus One Register (RX_FIFO_WR_HEAD_PTR_PLUS_ONE)

Address: 1A56h Size: 8 bits

This register contains the RX FIFO write head pointer plus one. This pointer indicates where the next received packet starts plus one. This register is for debug and test purpose only and should not normally be written.

Software must maintain coherency between this and the other Write Pointer Registers.

There is no hardware holding register to maintain write coherency between this and the other Write Pointer Registers. It is assumed that this register is only written while there is no active receive.

© 2024 Microchip Technology Inc. and its subsidiaries

Bits	Description	Type	Default
7	**RESERVED**	RO	-
6:0	**RX_FIFO_WR_HEAD_PTR_PLUS_ONE** This field contains the RX FIFO write head pointer plus one.	R/W	0000001b

10.4.2.22 RX FIFO Write Head Pointer Plus One Control Bits Register (RX_FIFO_WR_HEAD_PTR_PLUS_ONE_CTL_BITS)

Address: 1A57h Size: 8 bits

This register contains the auxiliary control bits of the RX FIFO write head pointer plus one. This register is for debug and test purposes only and should not normally be written.

Software must maintain coherency between this and the other Write Pointer Registers.

There is no hardware holding register to maintain write coherency between this and the other Write Pointer Registers. It is assumed that this register is only written while there is no active receive.

Bits	Description	Type	Default
7:1	**RESERVED**	RO	-
0	**RX_FIFO_WR_HEAD_PTR_PLUS_ONE_WRAP** This field toggles each time the RX FIFO write head pointer plus one wraps past the top of the RAM (location 127).	R/W	0b

10.4.2.23 PD MAC Interrupt Status and Enable Registers

The following sub-sections describe the various registers associated with the PD MAC interrupts.

Refer to Section 7.1, "System Interrupts," on page 22 for additional information on system level interrupt control.

10.4.2.24 MAC Interrupt Status Register (MAC_IRQ_STAT)

Address: 1A80h Size: 8 bits

This register reflects the summary status of the various interrupt sources. If any of these bits are set, the MAC_INT interrupt bit in the Interrupt Status Register (INT_STS) will be active (if enabled).

Bits in this register are read-only and reflect the combined result of the other PD MAC interrupt status registers.

There is no corresponding enable register since all interrupts have enables at lower levels of the hierarchy.

Bits	Description	Type	Default
7:5	**RESERVED**	RO	-

© 2024 Microchip Technology Inc. and its subsidiaries

Bits	Description	Type	Default
4	**RX_SOP_IRQ_STAT** RX SOP status. This bit is set when any bit in the RX SOP Interrupt Status Register (RX_SOP_IRQ_STAT) is set and enabled via the RX SOP Interrupt Enable Register (RX_SOP_IRQ_EN). This bit can only be cleared by clearing or disabling the bit(s) in the RX SOP Interrupt Status Register (RX_SOP_IRQ_STAT).	RO	0b
3	**PM_IRQ_STAT** Power Management status. This bit is set when any bit in the Power Management Interrupt Status Register (PM_IRQ_STAT) is set and enabled via the Power Management Interrupt Enable and Control Register (PM_IRQ_EN). This bit can only be cleared by clearing or disabling the bit(s) in the Power Management Interrupt Status Register (PM_IRQ_STAT).	RO	0b
2	**RX_ERR_IRQ_STAT** RX Error status. This bit is set when any bit in the RX Error Interrupt Status Register (RX_ERR_IRQ_STAT) is set and enabled via the RX Error Interrupt Enable Register (RX_ERR_IRQ_EN). This bit can only be cleared by clearing or disabling the bit(s) in the RX Error Interrupt Status Register (RX_ERR_IRQ_STAT).	RO	0b
1	**RX_IRQ_STAT** RX status. This bit is set when any bit in the RX Interrupt Status Register (RX_IRQ_STAT) is set and enabled via the RX Interrupt Enable Register (RX_IRQ_EN). This bit can only be cleared by clearing or disabling the bit(s) in the RX Interrupt Status Register (RX_IRQ_STAT).	RO	0b
0	**TX_IRQ_STAT** TX status. This bit is set when any bit in the TX Interrupt Status Register (TX_IRQ_STAT) is set and enabled via the TX Interrupt Enable Register (TX_IRQ_EN). This bit can only be cleared by clearing or disabling the bit(s) in the TX Interrupt Status Register (TX_IRQ_STAT).	RO	0b

10.4.2.25 TX Interrupt Status Register (TX_IRQ_STAT)

Address: 1A81h Size: 8 bits

This register reflects the status of various TX_IRQ_STAT sources. Whether an interrupt is generated or not depends on the values in the TX Interrupt Enable Register (TX_IRQ_EN).

Bits in this register are set by hardware and must be cleared by software.

Bits	Description	Type	Default
7	**AUTO_RSP_ABORTED** A TX auto response message was aborted. The reason why the TX was aborted can be determined by reading the TX Auto Response Abort Status Register (TX_AR_ABORT_STAT).	R/W1C	0b
6	**AUTO_RSP_SENT** Hardware has sent an auto response. This bit is set when hardware is finished sending an auto response.	R/W1C	0b

© 2024 Microchip Technology Inc. and its subsidiaries

Bits	Description	Type	Default
5	**OK_TO_TX** It is now OK to transmit. This bit is set when the OK_TO_TX bit in TX Control Register B (TX_CTL_B) changes from 0 to 1 indicating that it is OK for software to initiate transmission.	R/W1C	1b
4	**CRC_RCV_TIMEOUT** CRC Receive Timer expired. This is a TX failure. This interrupt should be enabled only when Automatic Retry mode is disabled. The EN_CRC_RCV_TMR bit in the RX Control Register A (RX_CTL_A) must be set to enable the timer for use by software. **Note:** CRC Receive Timer is also used in BIST Mode to time reception of the BIST Error Count message.	R/W1C	0b
3	**TX_EOP** Hardware is done sending a packet. Note this does not mean that a valid EOP framing symbol was sent. It only means that packet transmission ended, i.e., transmitter was turned off. This bit is set after each TX attempt. This can be used to signal when a hard or cable Reset has finished transmission, since it does not have a GoodCRC response and therefore the TX_DONE bit will not be set - or if Auto Retry mode is disabled, in which case the hardware is done when the transmitter turns off. This bit is used by software to trigger internal timers. Software must be careful when it enables/disables this interrupt because this bit is set after each TX completion.	R/W1C	0b
2	**TX_ABORTED** A TX message was aborted. The reason why the TX was aborted can be determined by reading the TX Abort Status Register (TX_ABORT_STAT).	R/W1C	0b
1	**TX_FAILED** Applicable in Auto Retry mode only (or when the GoodCRC timer is enabled). This interrupt indicates a TX message request failed to complete for one of the following reasons: • GoodCRC timer expired • Maximum number of retries exceeded **Note:** Software may enable the GoodCRC timer without enabling auto retry. In this case, this interrupt will be generated when the GoodCRC timer expires. It is the software's responsibility to disable the GoodCRC timer upon the reception of a GoodCRC message to prevent generation of this interrupt.	R/W1C	0b
0	**TX_DONE** Applicable in Auto Retry mode only. A TX message request is successfully completed, i.e., the message is acknowledged with a GoodCRC by recipient. This bit is not set for messages that do not receive a GoodCRC message, i.e., a hard or cable Reset. TX_EOP should be used in such situations. When Auto Retry mode is disabled, TX_EOP should be used to determine when the packet is done transmitting.	R/W1C	0b

© 2024 Microchip Technology Inc. and its subsidiaries

10.4.2.26 RX Interrupt Status Register (RX_IRQ_STAT)

Address: 1A82h Size: 8 bits

This register reflects the status of various RX_IRQ_STAT sources. Whether an interrupt is generated or not depends on the values in the RX Interrupt Enable Register (RX_IRQ_EN).

Bits in this register are set by hardware and must be cleared by software.

Bits	Description	Type	Default
7	**RX_FIFO_NOT_EMPTY** RX FIFO is not empty. This bit is set whenever the RX FIFO has data to be read. It is typically set when a valid packet is finished being received and cleared, once all data has been read. **Note:** This bit is read-only and is cleared once the FIFO is empty.	RO	0b
6	**LINE_WENT_IDLE** Line is now idle. This bit is set when hardware detects no activity on the PD bus. **Note:** This bit is not line status; it is an event. If line is already idle when this interrupt is enabled, this bit will be set immediately. If line is busy when this interrupt is enabled, this bit will be set when line goes idle. Software can use this to be informed when either TX is over or RX is over. This will only work while clocks are enabled.	R/W1C	1b
5	**RX_CABLE_RST** Cable Reset Message received.	R/W1C	0b
4	**RESERVED**	RO	-
3	**RX_HARD_RST** Hard Reset Message received.	R/W1C	0b
2	**RX_EOP** Hardware detected valid EOP framing. A bad EOP or abnormal termination will cause the packet to be dropped. This bit is set only for frames that started with an SOP type that was enabled via the RX Control Register B (RX_CTL_B).	R/W1C	0b
1	**RX_SOP** Hardware detected valid SOP framing sequence. This bit is set for any SOP type that is enabled via the RX Control Register B (RX_CTL_B).	R/W1C	0b
0	**RX_DONE** RX message is successfully received. The following conditions apply: • In Auto Retry mode, expected GoodCRC messages are dropped and therefore not indicated. • In Auto Response mode, duplicate packets are dropped and therefore not indicated **Note:** In Auto Response mode, this bit is set before the GoodCRC response is sent and regardless of its successful transmission.	R/W1C	0b

© 2024 Microchip Technology Inc. and its subsidiaries

10.4.2.27 RX Error Interrupt Status Register (RX_ERR_IRQ_STAT)

Address: 1A83h Size: 8 bits

This register reflects the status of various RX_ERR_IRQ_STAT sources. Whether an interrupt is generated or not depends on the values in the RX Error Interrupt Enable Register (RX_ERR_IRQ_EN).

Bits in this register are set by hardware and must be cleared by software.

Bits	Description	Type	Default
7	**DBG_EVENT** Debug event occurred: • Count of packets with bad CRC reached limit. Provides indication of link quality. • Count of duplicate packets reached limit. Provides indication of dropped GoodCRC packets by receiver. **Note:** Software must read both count registers in order to determine which of the above two conditions caused the event. **Note:** Unlike other RX IRQ status bits, which are triggered by strobes, this bit is persistent, i.e., if the register causing the interrupt is not cleared prior to clearing the interrupt, then this bit will set again.	R/W1C	0b
6:4	**RESERVED**	RO	-
3	**RX_BAD_PKT** Received corrupt packet (Bad CRC, Symbol Error, Oversize or ODD nibble count). RX_PKT_STAT[0] (BAD_CRC), RX_PKT_STAT[5] (SYM_ERROR), RX_PKT_STAT[6] (ODD_NIBBLES) or RX_PKT_STAT[3] (RX_OVER_SIZE) in the RX Packet Status Register (RX_PKT_STAT) will be set.	R/W1C	0b
2	**RX_BUF_OVR_RUN** Receiving packet but no buffer space available. In this case, the RX_PKT_STAT[4] (RX_FIFO_FULL) bit in the RX Packet Status Register (RX_PKT_STAT) will be set. Received packet will be dropped.	R/W1C	0b
1	**RX_PCOL_ERROR** Applicable to Auto Retry mode only. Hardware detected protocol error. i.e., received other than a GoodCRC or Ping message when a GoodCRC message was expected. Received message will be placed in RXQ and the RX_DONE bit will be set. Auto Retry will be aborted and the TX_ABORTED bit will be set.	R/W1C	0b
0	**RX_PKT_DROPPED** RX packet is dropped due to: • Duplicate packet in Auto Response mode • GoodCRC message in Auto Retry mode	R/W1C	0b

© 2024 Microchip Technology Inc. and its subsidiaries

10.4.2.28 Power Management Interrupt Status Register (PM_IRQ_STAT)

Address: 1A84h Size: 8 bits

This register reflects the status of various PM_IRQ_STAT sources. Whether an interrupt is generated or not depends on the values in the Power Management Interrupt Enable and Control Register (PM_IRQ_EN).

Bits in this register are set by hardware and must be cleared by software.

Bits	Description	Type	Default
7:1	**RESERVED**	RO	-
0	**UPD_ACT_WS** USB PD activity detected. This bit is set asynchronously by assertion of the receive input signal at the beginning of any activity. To prevent metastability, this interrupt should only be enabled when software plans to stop the clocks. Clearing the USB_PD_ACT_WS_EN bit will actually prevent this bit from being set, unlike the other interrupt status bits. This bit is not affected by either UPD_CLK_STOP_EN or UPD_WU_EN. USB PD Activity status is available in other register bits during normal operation.	R/W1C	0b

10.4.2.29 RX SOP Interrupt Status Register (RX_SOP_IRQ_STAT)

Address: 1A85h Size: 8 bits

This register reflects the status of the occurrence of various received SOP types. The SOP type does not need to be enabled via the RX Control Register B (RX_CTL_B) in order for a status bit to be set. Whether an interrupt is generated or not depends on the value of the RX SOP Interrupt Enable Register (RX_SOP_IRQ_EN).

The bits in this register are not cascaded into the RX Interrupt Status Register, but instead they are enabled and OR'ed into their own interrupt signal output.

Bits in this register are set by hardware and must be cleared by software.

Bits	Description	Type	Default
7:5	**RESERVED**	RO	-
4:0	**RX_SOP** Hardware detected valid SOP framing sequence. Bit 0: SOP Bit 1: SOP' Bit 2: SOP" Bit 3: SOP'_Debug Bit 4: SOP"_Debug	R/W1C	00000b

10.4.2.30 TX Interrupt Enable Register (TX_IRQ_EN)

Address: 1A86h Size: 8 bits

© 2024 Microchip Technology Inc. and its subsidiaries

Setting a bit in this register will enable the corresponding source to generate an interrupt. Note that only interrupt generation is affected. The TX Interrupt Status Register (TX_IRQ_STAT) will still reflect the status of the event.

All interrupts are disabled after POR.

Bits	Description	Type	Default
7	**AUTO_RSP_ABORTED_EN** Setting this bit enables the AUTO_RSP_ABORTED interrupt.	R/W	0b
6	**AUTO_RSP_SENT_EN** Setting this bit enables the AUTO_RSP_SENT interrupt.	R/W	0b
5	**OK_TO_TX_EN** Setting this bit enables the OK_TO_TX interrupt.	R/W	0b
4	**CRC_RCV_TIMEOUT_EN** Setting this bit enables the CRC_RCV_TIMEOUT interrupt.	R/W	0b
3	**TX_EOP_EN** Setting this bit enables the TX_EOP interrupt.	R/W	0b
2	**TX_ABORTED_EN** Setting this bit enables the TX_ABORTED interrupt.	R/W	0b
1	**TX_FAILED_EN** Setting this bit enables the TX_FAILED interrupt.	R/W	0b
0	**TX_DONE_EN** Setting this bit enables the TX_DONE interrupt.	R/W	0b

10.4.2.31 RX Interrupt Enable Register (RX_IRQ_EN)

Address: 1A87h Size: 8 bits

Setting a bit in this register will enable the corresponding source to generate an interrupt. Note that only interrupt generation is affected. The RX Interrupt Status Register (RX_IRQ_STAT) will still reflect the status of the event.

All interrupts are disabled after POR.

Bits	Description	Type	Default
7	**RX_FIFO_NOT_EMPTY_EN** Setting this bit enables the RX_FIFO_NOT_EMPTY interrupt.	R/W	0b
6	**LINE_WENT_IDLE_EN** Setting this bit enables the LINE_WENT_IDLE interrupt.	R/W	0b
5	**RX_CABLE_RST_EN** Setting this bit enables the RX_CABLE_RST interrupt.	R/W	0b
4	**RESERVED**	RO	-
3	**RX_HARD_RST_EN** Setting this bit enables the RX_HARD_RST interrupt.	R/W	0b
2	**RX_EOP_EN** Setting this bit enables the RX_EOP interrupt.	R/W	0b
1	**RX_SOP_EN** Setting this bit enables the RX_SOP interrupt.	R/W	0b
0	**RX_DONE_EN** Setting this bit enables the RX_DONE interrupt.	R/W	0b

© 2024 Microchip Technology Inc. and its subsidiaries

10.4.2.32 RX Error Interrupt Enable Register (RX_ERR_IRQ_EN)

Address: 1A88h Size: 8 bits

Setting a bit in this register will enable the corresponding source to generate an interrupt. Note that only interrupt generation is affected. The RX Error Interrupt Status Register (RX_ERR_IRQ_STAT) will still reflect the status of the event.

All interrupts are disabled after POR.

Bits	Description	Type	Default
7	**DBG_EVENT_EN** Setting this bit enables the DBG_EVENT interrupt.	R/W	0b
6:4	**RESERVED**	RO	-
3	**RX_BAD_PKT_EN** Setting this bit enables the RX_BAD_PKT interrupt.	R/W	0b
2	**RX_BUF_OVR_RUN_EN** Setting this bit enables the RX_BUF_OVR_RUN interrupt.	R/W	0b
1	**RX_PCOL_ERROR_EN** Setting this bit enables the RX_PCOL_ERROR interrupt.	R/W	0b
0	**RX_PKT_DROPPED_EN** Setting this bit enables the RX_PKT_DROPPED interrupt.	R/W	0b

10.4.2.33 Power Management Interrupt Enable and Control Register (PM_IRQ_EN)

Address: 1A89h Size: 8 bits

Setting a bit in this register will enable the corresponding source to generate an interrupt. Note that only interrupt generation is affected. The Power Management Interrupt Status Register (PM_IRQ_STAT) will still reflect the status of the event.

All interrupts are disabled after POR. This register also enables clock start and stop requests.

Bits	Description	Type	Default
7:4	**RESERVED**	RO	-
3	**UPD_CLK_STOP_EN** If this bit is set, the MAC, upon going idle, will request that the system clock be stopped. If this bit is cleared, software is responsible to return the device to Sleep mode. This bit does not affect the wake up interrupt (UPD_ACT_WS) generation. **Note:** This bit does not affect the MAC's indication that it requires the clock. Even if this bit is cleared, the MAC, once it is idle, will indicate that it does not need the clock.	R/W	0b

© 2024 Microchip Technology Inc. and its subsidiaries

Bits	Description	Type	Default
2	**UPD_WU_EN** If this bit is set, the MAC, upon detecting receive activity, will request that the system clock be started. This bit does not affect the wake up interrupt (UPD_ACT_WS) generation. **Note:** Once clocks have been started, this bit does not affect the MAC's indication that it requires the clock. Even if this bit is cleared, the MAC, once it is non-idle (i.e., squelch is active), will indicate that it requires the clock. Only the period between the asynchronous wake up and the start of squelch is affected.	R/W	0b
1	**RESERVED**	RO	-
0	**USB_PD_ACT_WS_EN** Setting this bit enables the UPD_ACT_WS interrupt.	R/W	0b

10.4.2.34 RX SOP Interrupt Enable Register (RX_SOP_IRQ_EN)

Address: 1A8Ah Size: 8 bits

Setting a bit in this register will enable the corresponding source to generate an interrupt. Note that only interrupt generation is affected. The RX SOP Interrupt Status Register (RX_SOP_IRQ_STAT) will still reflect the status of the event.

All interrupts are disabled after POR.

Bits	Description	Type	Default
7:5	**RESERVED**	RO	-
4:0	**RX_SOP_EN** Setting a bit enables the corresponding RX_SOP interrupt. Bit 0: SOP Bit 1: SOP' Bit 2: SOP" Bit 3: SOP'_Debug Bit 4: SOP"_Debug	R/W	00000b

© 2024 Microchip Technology Inc. and its subsidiaries

10.4.2.35 Reset Control Register (RESET_CTL)

Address: 1A8Bh Size: 8 bits

Bits	Description	Type	Default
7	**SW_RESET** Software generated PD MAC Reset. Software can use this bit to reset the PD MAC to its POR state. Software should toggle this bit, i.e., set it and clear it. After clearing this bit, software will have to reinitialize the PD MAC, including the BMC registers. This bit is reset by **RESET_N**.	R/W	0b
6	**BMC_SW_RESET** Software generated BMC Reset. Software can use this bit to reset the BMC encoder/decoder to its POR state. Software should toggle this bit, i.e., set it and clear it. The BMC registers are NOT affected by this Reset.	R/W	0b
5:1	**RESERVED**	RO	-
0	**PD_RESET** Software should set this bit when it is done processing a PD hard Reset or cable Reset so hardware can return to PD Reset state. Software should toggle this bit, i.e., set it and clear it. The following are reset by PD_RESET: • RX_CTL FSM goes to POR state, except hard and cable Reset processing remains enabled if it was previously enabled by enabling the receiver. • TX_CTL FSM goes to POR state. • TX parallel to serial and 4b5b encoder. • TX Control Register B (TX_CTL_B) GO, TX_HARD_RESET, TX_CABLE_RESET bits. • TX Parameters Register A (TX_PARAM_A) EN_FWTX bit. The following are not reset: • All PD MAC registers, except as listed above. • Various TX packet counters are NOT reset (NUM_PD_PACKETS_SENT, NUM_MISSING_GCRC_MSG, NUM_MISSING_GCRC_MSG_SENT). • Various RX packet counters are NOT reset (RX_BADCRC_PKT_CNT, RX_DUP_PKT_CNT, NUM_PD_PACKETS_RECVD). • RX FIFO is NOT reset. • RX CDR, 4b5b decoder, and CRC are not reset. • TX IFG timer and CRC are not reset. • BIST and Power Management functions are not reset. • BMC encoder/decoder.	R/W	0b

© 2024 Microchip Technology Inc. and its subsidiaries

10.4.2.36 PD MAC BMC Encoder/Decoder Registers

The following sub-sections describe the various registers associated with the PD MAC BMC Encoder/Decoder.

10.4.2.37 BMC RX High Level Full Bit Maximum Time Register (BMC_RX_HI_FB_MAX_TIME)

Address: 1AA0h Size: 8 bits

The value of this register together with the value of the BMC RX High Level Full Bit Minimum Time Register (BMC_RX_HI_FB_MIN_TIME) is used by the BMC decoder to determine the valid full bit time for a high-level RX signal. This time should take into account both the bit rate range and duty cycle distortion of the received signal.

BMC_RX_HI_FB_MAX_TIME > valid high time > BMC_RX_HI_FB_MIN_TIME

Bits	Description	Type	Default
7:0	**BMC_RX_HI_FB_MAX_TIME** Time in clock cycles at minimum bit rate and worst duty cycle distortion. = (((clock_freq_KHz / min_bit_rate_Kbps) * (100 + tolerance) / 100) - 1) **Note:** A value of 202 (decimal) is recommended for this field.	R/W	00h

10.4.2.38 BMC RX High Level Full Bit Minimum Time Register (BMC_RX_HI_FB_MIN_TIME)

Address: 1AA1h Size: 8 bits

The value of this register, together with the value of the BMC RX High Level Full Bit Maximum Time Register (BMC_RX_HI_FB_MAX_TIME), is used by the BMC decoder to determine the valid full bit time for a high-level RX signal. This time should take into account both the bit rate range and the duty cycle distortion of the received signal.

BMC_RX_HI_FB_MAX_TIME > valid high time > BMC_RX_HI_FB_MIN_TIME

BMC_RX_HI_FB_MIN_TIME > BMC_RX_HI_HB_-MAX_TIME

Bits	Description	Type	Default
7:0	**BMC_RX_HI_FB_MIN_TIME** Time in clock cycles at maximum bit rate and worst duty cycle distortion. = (((clock_freq_KHz / max_bit_rate_Kbps) * (100 - tolerance) / 100) - 1) **Note:** A value of 116 (decimal) is recommended for this field.	R/W	00h

10.4.2.39 BMC RX Low Level Full Bit Maximum Time Register (BMC_RX_LO_FB_MAX_TIME)

Address: 1AA2h Size: 8 bits

The value of this register together with the value of the BMC RX Low Level Full Bit Minimum Time Register (BMC_RX_LO_FB_MIN_TIME) is used by the BMC decoder to determine the valid full bit time for a low-level RX signal. This time should take into account both the bit rate range and duty cycle distortion of the received signal.

© 2024 Microchip Technology Inc. and its subsidiaries

BMC_RX_LO_FB_MAX_TIME > valid low time > BMC_RX_LO_FB_MIN_TIME

Bits	Description	Type	Default
7:0	**BMC_RX_LO_FB_MAX_TIME** Time in clock cycles at minimum bit rate and worst duty cycle distortion. = (((clock_freq_KHz / min_bit_rate_Kbps) * (100 + tolerance) / 100) - 1) **Note:** A value of 202 (decimal) is recommended for this field.	R/W	00h

10.4.2.40 BMC RX Low Level Full Bit Minimum Time Register (BMC_RX_LO_FB_MIN_TIME)

Address: 1AA3h Size: 8 bits

The value of this register, together with the value of the BMC RX Low Level Full Bit Maximum Time Register (BMC_RX_LO_FB_MAX_TIME), is used by the BMC decoder to determine the valid full bit time for a low-level RX signal. This time should take into account both the bit rate range and duty cycle distortion of the received signal.

BMC_RX_LO_FB_MAX_TIME > valid low time > BMC_RX_LO_FB_MIN_TIME

BMC_RX_LO_FB_MIN_TIME > BMC_RX_LO_HB_-MAX_TIME

Bits	Description	Type	Default
7:0	**BMC_RX_LO_FB_MIN_TIME** Time in clock cycles at maximum bit rate and worst duty cycle distortion. = (((clock_freq_KHz / max_bit_rate_Kbps) * (100 - tolerance) / 100) - 1) **Note:** A value of 116 (decimal) is recommended for this field.	R/W	00h

10.4.2.41 BMC RX High Level Half Bit Maximum Time Register (BMC_RX_HI_HB_MAX_TIME)

Address: 1AA4h Size: 8 bits

The value of this register, together with the value of the BMC RX High Level Half Bit Minimum Time Register (BMC_RX_HI_HB_MIN_TIME), is used by the BMC decoder to determine the valid half bit time for a high-level RX signal. This time should take into account both the bit rate range and duty cycle distortion of the received signal.

BMC_RX_HI_HB_MAX_TIME > valid high time > BMC_RX_HI_HB_MIN_TIME

Bits	Description	Type	Default
7:0	**BMC_RX_HI_HB_MAX_TIME** Time in clock cycles at minimum bit rate and worst duty cycle distortion. =((1 / 2) * ((clock_freq_KHz / min_bit_rate_Kbps)*(100 + tolerance) / 100) - 1) **Note:** A value of 110 (decimal) is recommended for this field.	R/W	00h

10.4.2.42 BMC RX High Level Half Bit Minimum Time Register (BMC_RX_HI_HB_MIN_TIME)

Address: 1AA5h Size: 8 bits

© 2024 Microchip Technology Inc. and its subsidiaries

The value of this register, together with the value of the BMC RX High Level Half Bit Maximum Time Register (BMC_RX_HI_HB_MAX_TIME), is used by the BMC decoder to determine the valid half bit time for a high-level RX signal. This time should take into account both the bit rate range and duty cycle distortion of the received signal.

BMC_RX_HI_HB_MAX_TIME > valid high time > BMC_RX_HI_HB_MIN_TIME

BMC_RX_HI_FB_MIN_TIME > BMC_RX_HI_HB_-MAX_TIME

Bits	Description	Type	Default
7:0	**BMC_RX_HI_HB_MIN_TIME** Time in clock cycles at maximum bit rate and worst duty cycle distortion. =((1 / 2) * ((clock_freq_KHz / max_bit_rate_Kbps)*(100 - tolerance) / 100) - 1) **Note:** A value of 48 (decimal) is recommended for this field.	R/W	00h

10.4.2.43 BMC RX Low Level Half Bit Maximum Time Register (BMC_RX_LO_HB_MAX_TIME)

Address: 1AA6h Size: 8 bits

The value of this register, together with the value of the BMC RX Low Level Half Bit Minimum Time Register (BMC_RX_LO_HB_MIN_TIME), is used by the BMC decoder to determine the valid half bit-time for a low-level RX signal. This time should take into account both the bit rate range and duty cycle distortion of the received signal.

BMC_RX_LO_HB_MAX_TIME > valid low time > BMC_RX_LO_HB_MIN_TIME

Bits	Description	Type	Default
7:0	**BMC_RX_LO_HB_MAX_TIME** Time in clock cycles at minimum bit rate and worst duty cycle distortion. =((1 / 2) * ((clock_freq_KHz / min_bit_rate_Kbps)*(100 + tolerance) / 100) - 1) **Note:** A value of 110 (decimal) is recommended for this field.	R/W	00h

10.4.2.44 BMC RX Low Level Half Bit Minimum Time Register (BMC_RX_LO_HB_MIN_TIME)

Address: 1AA7h Size: 8 bits

The value of this register, together with the value of the BMC RX Low Level Half Bit Maximum Time Register (BMC_RX_LO_HB_MAX_TIME), is used by the BMC decoder to determine the valid half bit time for a low-level RX signal. This time should take into account both the bit rate range and duty cycle distortion of the received signal.

BMC_RX_LO_HB_MAX_TIME > valid low time > BMC_RX_LO_HB_MIN_TIME

BMC_RX_LO_FB_MIN_TIME > BMC_RX_LO_HB_-MAX_TIME

Bits	Description	Type	Default
7:0	**BMC_RX_LO_HB_MIN_TIME** Time in clock cycles at maximum bit rate and worst duty cycle distortion. =((1 / 2) * ((clock_freq_KHz / max_bit_rate_Kbps)*(100 - tolerance) / 100) - 1) **Note:** A value of 48 (decimal) is recommended for this field.	R/W	00h

© 2024 Microchip Technology Inc. and its subsidiaries

10.4.2.45 BMC RX Squelch Assert Time Register (BMC_RX_SQL_ASSERT_TIME)

Address: 1AA8h Size: 8 bits

The value of this register is used by the BMC decoder to determine when there is a valid signal. If three edges of the receive signal are seen within this time, then the “squelch” goes active. This time should take into account the minimum bit rate, but it does not need to account for the duty cycle distortion of the received signal. A typical assert time would be three maximum half-bit times plus the desired tolerance.

Bits	Description	Type	Default
7:0	**BMC_RX_SQL_ASSERT_TIME** Time in clock cycles x 4 at minimum bit rate. assert time uS = (BMC_RX_SQL_ASSERT_TIME x 4 + 1) / clock_freq MHz A typical assert time would be three maximum half-bit times plus the desired tolerance. **Note:** A value of 70 (decimal) is recommended for this field.	R/W	00h

10.4.2.46 BMC RX Squelch Hold Time Register (BMC_RX_SQL_HOLD_TIME)

Address: 1AA9h Size: 8 bits

The value of this register is used by the BMC decoder to provide time for the CDR circuit to output the final bit of data. A typical hold time would be one maximum half- bit time plus the desired tolerance.

Note: The Squelch Drop time is based on the BMC RX Maximum High and Low Time registers.

Bits	Description	Type	Default
7:0	**BMC_RX_SQL_HOLD_TIME** Time in clock cycles x 4 at minimum bit rate. hold time µs = (BMC_RX_SQL_HOLD_TIME x 4 + 1) / clock_freq MHz typical value = ((1 / 2) * ((clock_freq_KHz / min_bit_rate_Kbps) * (100 + tolerance) / 100) - 1) / 4 **Note:** A value of 23 (decimal) is recommended for this field.	R/W	00h

© 2024 Microchip Technology Inc. and its subsidiaries

10.4.2.47 BMC TX Bit-Time Count Register (BMC_TX_BITTIME_CNT)

Address: 1AB0h Size: 8 bits

Bits	Description	Type	Default
7:0	**BMC_TX_BIT_TIME_CNT** Bit time Counter Value. The BMC encoder uses this value to determine the bit timing for the last bit of data. This register can be used to adjust bit time for testing purpose (adjusting bit-rate). Count value is based on clock frequency and is given by: ((Clock Freq KHz / Bit Rate Kbps) - 1) i.e., Clock Frequency = 48000KHz (48MHz) Nominal Bit Rate = 300 Kbps bit_time_cnt = (48000 / 300) - 1 = 159 **Note:** A value of 159 (decimal) is recommended for this field.	R/W	00h

10.4.2.48 BMC Transition Window Time Register (BMC_TRANSITION_WINDOW_TIME)

Address: 1AB1h Size: 8 bits

The value of this register is used by the BMC decoder to determine when the line is idle. Detection is active when three transitions occur at the receiver within a time window of BMC_TRANSITION_WINDOW_TIME. After waiting BMC_TRANSITION_WINDOW_TIME without detecting three transitions, the bus is considered idle. The USB PD Specification calls for 12 µs minimum and 20 µs maximum.

Bits	Description	Type	Default
7:0	**BMC_TRANSITION_WINDOW_TIME** Time in clock cycles x 4 Transition time uS = (BMC_TRANSITION WINDOW_TIME x 4) / clock_freq MHz Per the USB PD Specification, this value should be set between 12 µs and 20 µs. This would be a value between 144 and 240 at 48MHz. **Note:** Unlike the TX Turnaround Time Register (TX_TA_TIME), this hardware does not use a pre-scaler, therefore the time specified is accurate. **Note:** A value of 200 (decimal) is recommended for this field.	R/W	00h

© 2024 Microchip Technology Inc. and its subsidiaries

10.4.3 PD MAC BIST REGISTERS

The following sub-sections describe the various registers associated with the PD MAC Built-In Self Test (BIST).

10.4.3.1 BIST Control Register A (BIST_CTL_A)

Address: 1AC0h Size: 8 bits

Bits	Description	Type	Default
7:5	**RESERVED**	RO	-
4	**BIST_RX_EN** Enable BIST Receiver. Setting this bit will: • Enable the BIST receiver. • Reset the PRBS generator in the BIST RX logic so it is ready to compare incoming BIST PRBS pattern. • Reset the BIST error count registers (BIST Error Count High Register (BIST_ERR_CNT_HI) and BIST Error Count Low Register (BIST_ERR_CNT_LO). Normally this bit is set only when BIST receiver mode is required; however, this bit can be set to enable loopback BIST testing by disabling Automatic Response mode and enabling the RX loopback (setting the EN_LOOPBACK bit in the RX Control Register A (RX_CTL_A)). This bit must be cleared and set by software every time a new BIST RX request comes in. **Note:** In BIST Loopback Test mode, BIST TX must be manually triggered for each TX packet since the functional receiver path is disabled.	R/W	0b
3	**BIST_EN** Enable BIST. Set this bit when BIST logic is activated. This bit, together with the EN_LOOPBACK bit in the RX Control Register A (RX_CTL_A), is used by hardware to block received data from going into functional path. This means that when loopback is enabled in BIST mode, hardware cannot detect hard Reset. This bit also powers up the BMC transmitter for BIST mode operation. Software should set this bit for a sufficient amount of time (5 µs) before triggering transmission of the BIST frame via BIST_TX_START/BIST_TX_STATUS.	R/W	0b
2:0	**BIST_TX_MODE** Set BIST Test mode. Only the following mode is supported: 010b: BIST Carrier Test Mode-2 (alternating '1's and '0's) All other modes are reserved and should not be used.	R/W	000b

© 2024 Microchip Technology Inc. and its subsidiaries

10.4.3.2 BIST Control Register B (BIST_CTL_B)

Address: 1AC1h Size: 8 bits

Bits	Description	Type	Default
7:3	**RESERVED**	RO	-
2	**BIST_CLR_ERR_CNT** Clears the BIST error count registers BIST Error Count High Register (BIST_ERR_CNT_HI) and BIST Error Count Low Register (BIST_ERR_CNT_LO).	WO	0b
1	**BIST_TX_RST** Reset the TX logic and PRBS generator. Software must set this bit once before starting the BIST test, i.e., setting the BIST_TX_START/BIST_TX_STATUS bit for the first time. Since this bit resets the PRBS generator, it should not be set again until the current BIST test is ended. This bit is not latched and will always read '0'. The PRBS generator cannot be reset by BIST_TX_START/BIST_TX_STATUS because that would reset it for each TX BIST frame. This bit should be used to stop the continuous BIST TX mode (2). It may take up to 1 bit time for the TX to stop. BIST_EN should not be cleared until after this time. **Note:** If this bit is set simultaneously with BIST_TX_START/BIST_TX_STATUS, it takes precedence and will void BIST_TX_START/BIST_TX_STATUS.	WO	0b
0	**BIST_TX_START/BIST_TX_STATUS** Start BIST transmission. Setting this bit will trigger transmission of BIST frame. This bit is not latched, and reading it will return the status of the current BIST transmission. Depending on BIST mode, transmission will either continue indefinitely (unless BIST_TX_RST is asserted) or stop after sending a BIST PRBS frame. BIST does not support sending of the next BIST frame automatically. It must be triggered by software by first clearing and then resetting this bit. **Note:** This bit cannot be set simultaneously with BIST_TX_RST. BIST_TX_RST has precedence and will void BIST_TX_START/BIST_TX_STATUS. In BIST RX mode, hardware will automatically send the BIST Error Count message if the EN_AUTO_RSP_MODE bit in the TX Control Register A (TX_CTL_A) is set.	WO/RO	0b

© 2024 Microchip Technology Inc. and its subsidiaries

10.4.3.3 BIST Error Count High Register (BIST_ERR_CNT_HI)

Address: 1AC2h Size: 8 bits

Bits	Description	Type	Default
7:0	**BIST_ERR_CNT_HI[7:0]** Upper byte of BIST error count (bits 15-8) (BIST_ERR_CNT[15:8])	RO	00h

10.4.3.4 BIST Error Count Low Register (BIST_ERR_CNT_LO)

Address: 1AC3h Size: 8 bits

Bits	Description	Type	Default
7:0	**BIST_ERR_CNT_LO[7:0]** Lower byte of BIST error count (bits 7-0) (BIST_ERR_CNT[7:0])	RO	00h

10.4.3.5 BIST RX Status Register (BIST_RX_STAT)

Address: 1AC7h Size: 8 bits

This register is used to help with functional testing of PD AFE on ATE. Hardware is configured to transmit BIST PRBS frames. At the same time, Loopback mode is enabled and BIST Receive mode is enabled. Now, when a PRBS frame is transmitted, it is also received and compared. This register provides information when the BIST PRBS frame is done receiving and whether there were any errors detected.

Bits	Description	Type	Default
7:2	**RESERVED**	RO	-
1	**BIST_RX_ERROR** This bit is valid only when the BIST_RX_DONE bit is set. A value of “0” indicates that BIST PRBS frame was received without errors. A value of “1” indicates that BIST PRBS frame was received with errors.	RO	0b
0	**BIST_RX_DONE** Successfully received a BIST RX FRAME. Writing a “1” to this bit will clear it.	R/W1C	0b

© 2024 Microchip Technology Inc. and its subsidiaries

11.0 POWER SWITCH

To enable the device to efficiently support dead battery use cases, an integrated power switch is provided to select between two external +3.3V supplies:

- **3V3_ALW**: +3.3V main power supply input to the integrated power switch.
- **3V3_VBUS**: +3.3V power supply input derived from VBUS to the integrated power switch.

The power switch allows the core to be powered from **3V3_ALW** normally, and from **3V3_VBUS** when **3V3_ALW** is not present. This effectively allows connection detection and system wakeup without external processor intervention (external processor in Sleep mode).

Attached to **3V3_ALW** and **3V3_VBUS** are two FET switches. The first FET switch has a diode across the output.

There are three voltage comparators. VBUS_PWRGD is on when **3V3_VBUS** exceeds 2.7V. 3V3_ALW_PWRGD is on when **3V3_ALW** exceeds 2.7V. VCORE_PWRGD is on when the core voltage reaches an operational level.

If VCORE_PWRGD is not asserted, the part is held in Reset. If both VBUS_PWRGD and 3V3_ALW_PWRGD are not asserted, the part is held in Reset, regardless of the state of the VCORE_PWRGD.

A block diagram of the internal power switch can be seen in Figure 11-1.

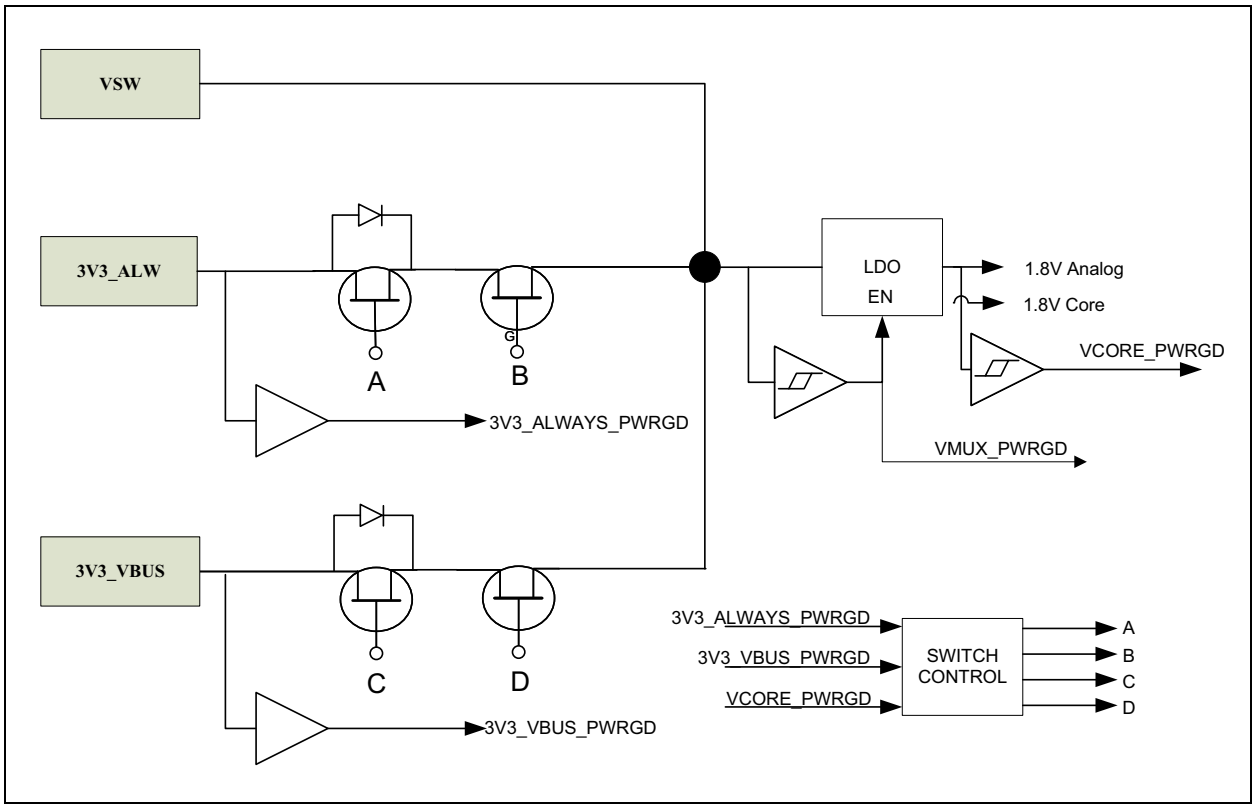

FIGURE 11-1: *Power Switch Block Diagram.*

11.1 Operation

11.1.1 POWER UP

When the device is powering up, both VBUS_PWRGD and 3V3_ALW_PWRGD are low. Under these conditions, switches A and C are open, and switches B and D are closed. The voltage going to the input of the core regulator is the higher of **3V3_ALW** and **3V3_VBUS**. The diodes prevent backdrive.

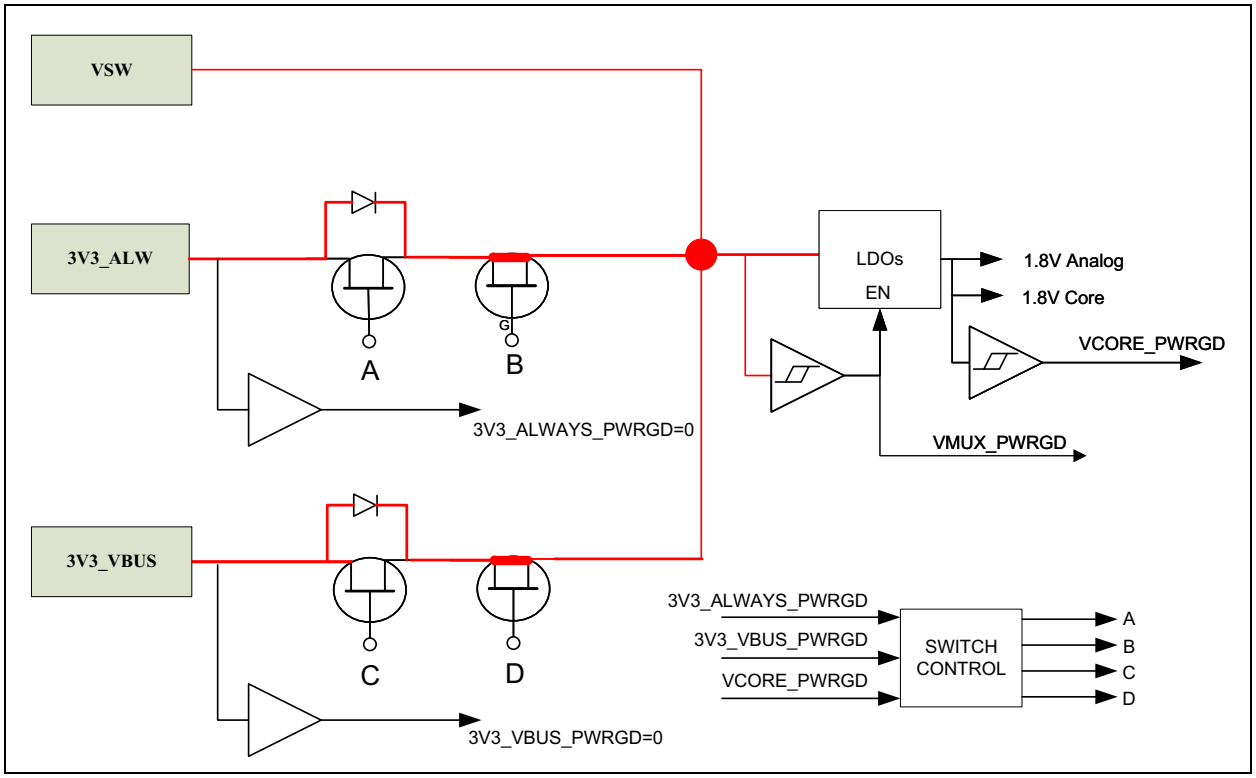

FIGURE 11-2: *Power Switch: Powering Up.*

11.1.2 3V3_ALW ONLY POWERS UP

In this case, only **3V3_ALW** powers up (VBUS_PWRGD = 0 and 3V3_ALW_PWRGD = 1). When this occurs, FET switch D is opened. After 50 µs, FET switch A is shorted. This sequence eliminates the possibility of backdrive when the diode is shorted to eliminate the voltage drop.

© 2024 Microchip Technology Inc. and its subsidiaries

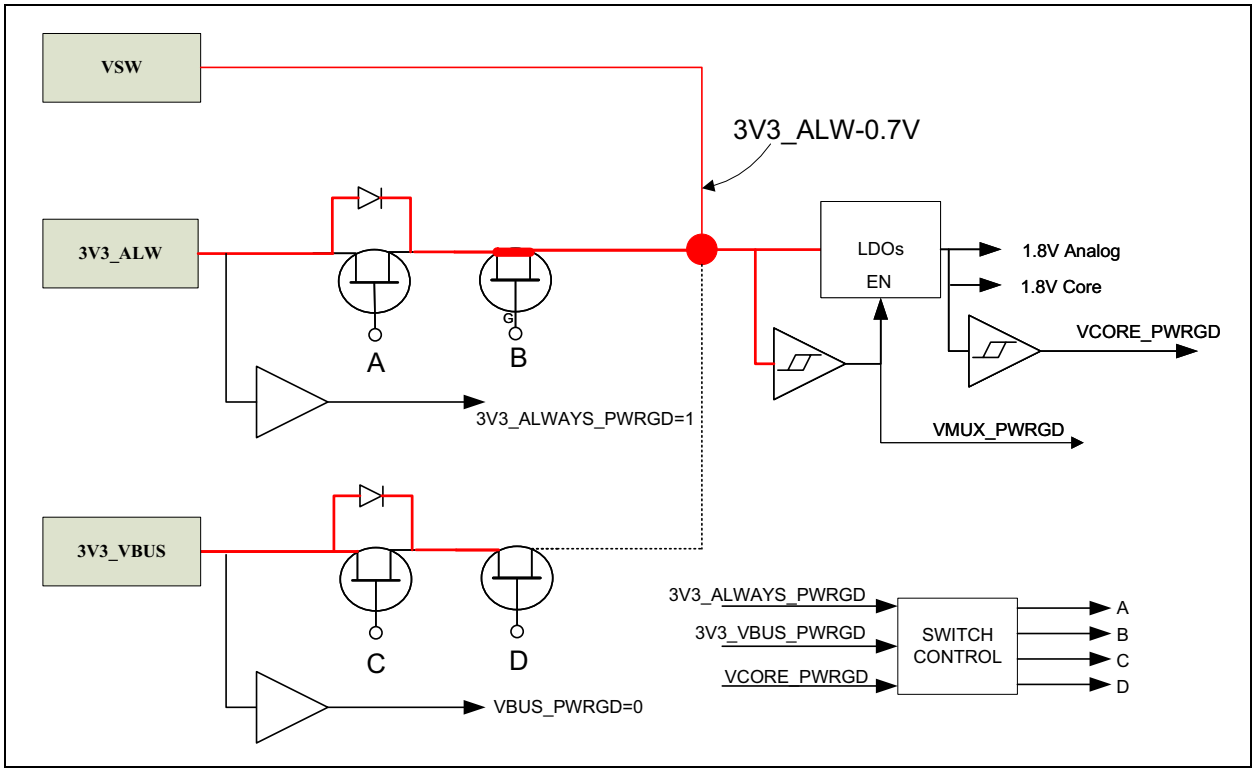

FIGURE 11-3: *Power Switch: Powering Up, Step One.*

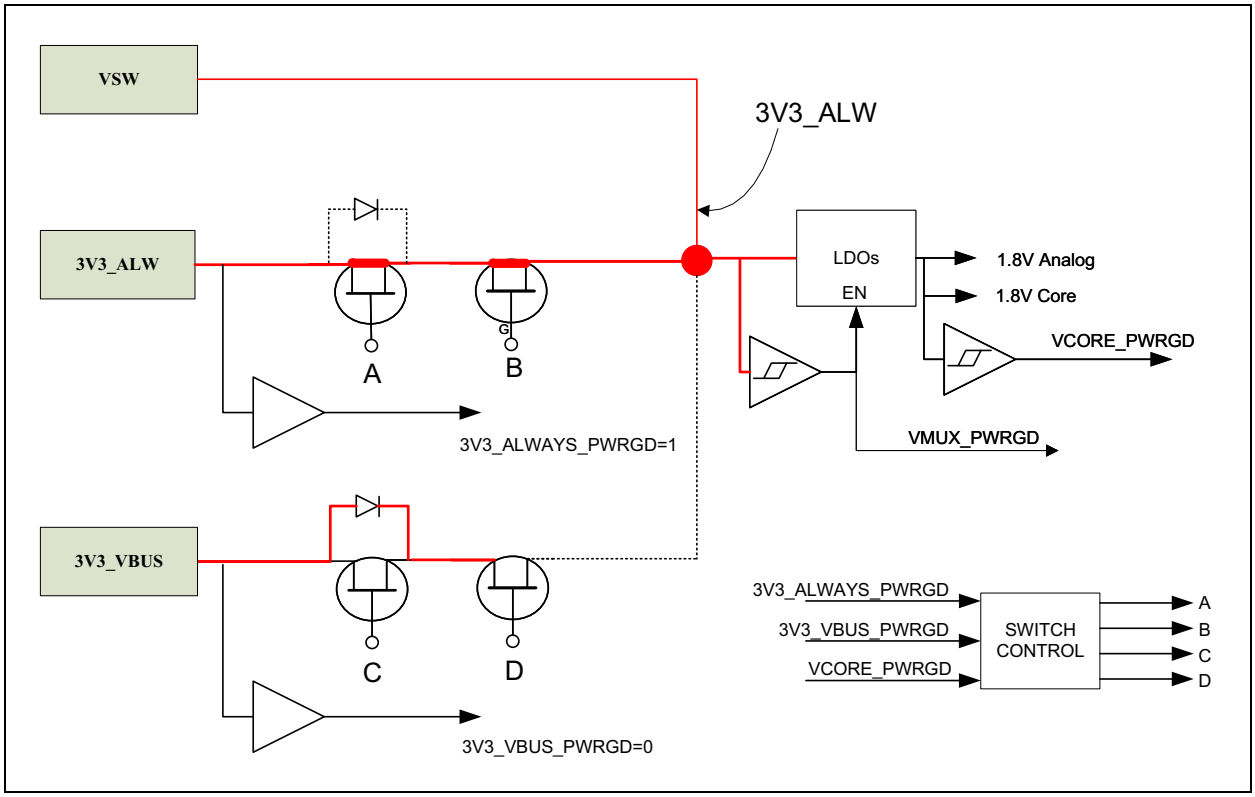

FIGURE 11-4: *Power Switch: Powering Up, Step Two.*

© 2024 Microchip Technology Inc. and its subsidiaries

11.1.3 VBUS ONLY POWERS UP

This is the opposite example from the previous case. In this case, only VBUS powers up (3V3_ALW_PWRGD = 0 throughout, and VBUS_PWRGD = 1 when the threshold is hit). Once VBUS_PWRGD is valid, the internal regulator is turned on and normal operation begins. At no time during this process is the **3V3_ALW** rail back driven. When VBUS is available and **3V3_ALW** is not, VBUS can supply 500 mA or more and can be in one of two modes. The first is a Normal Supply mode that can supply 500mA or more. VBUS can also be in a High Impedance mode, where the output voltage drops linearly with the supplied current (known as vSafeDB in the USB PD specification). The voltage and current relationship is shown in the Figure 11-5.

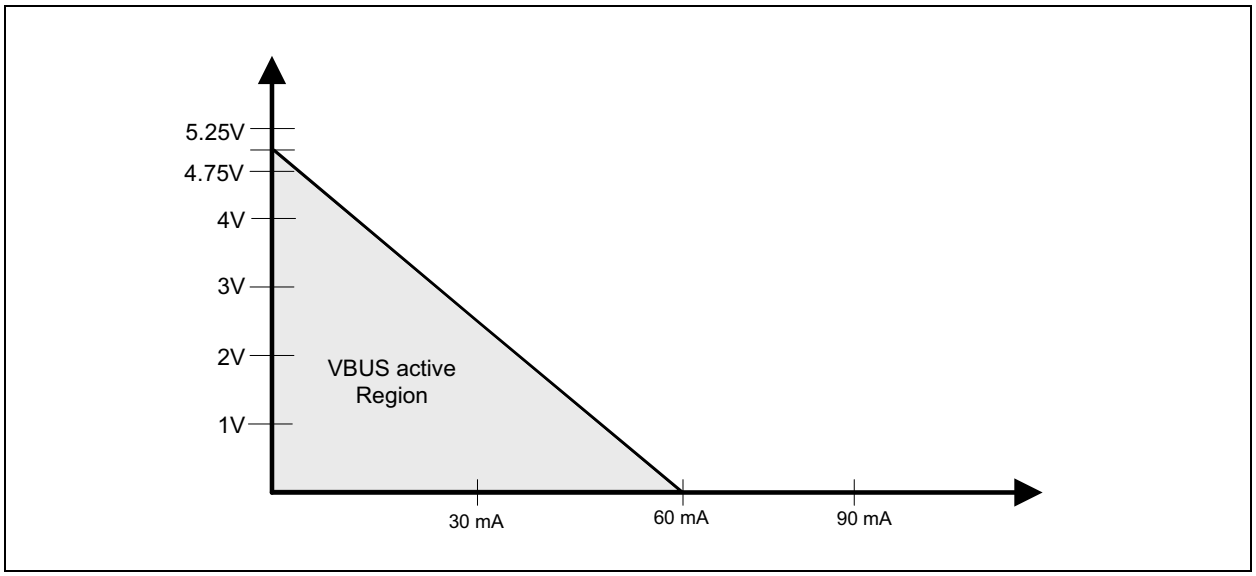

FIGURE 11-5: *Power Switch: VBUS Output in High Impedance Mode.*

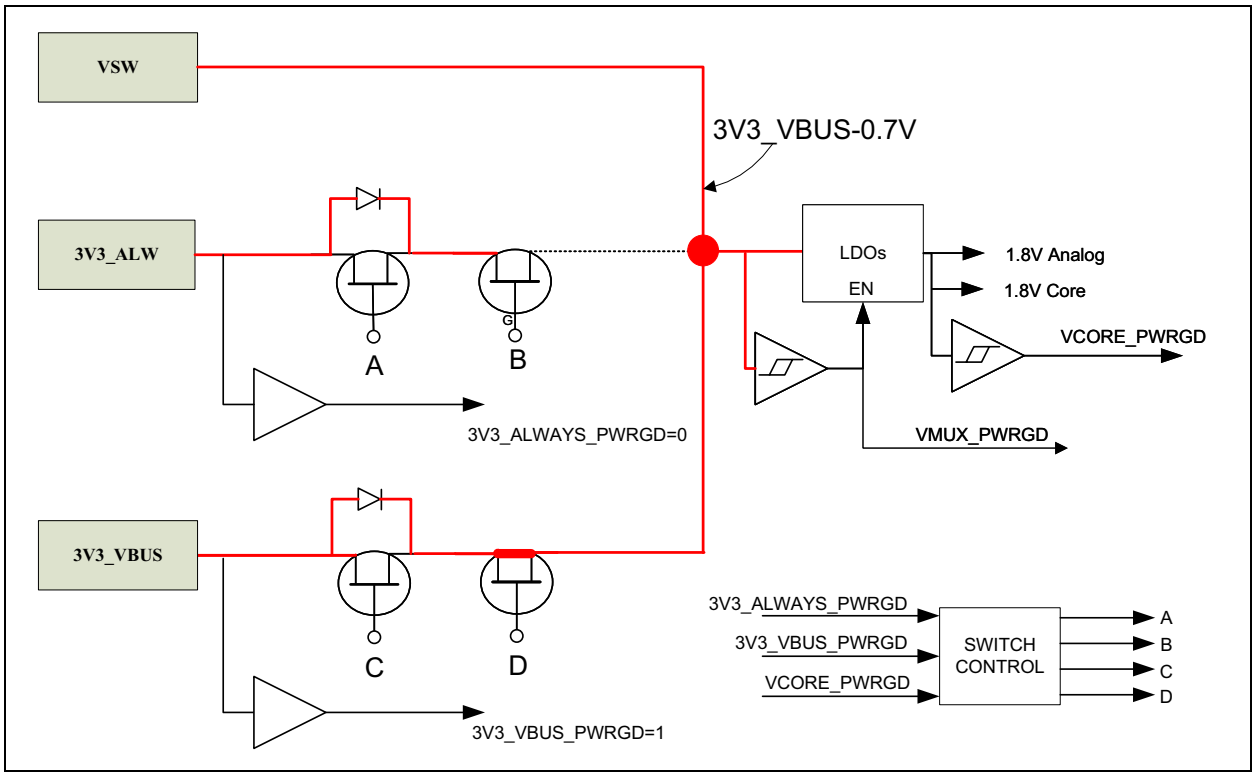

FIGURE 11-6: *Power Switch: VBUS-only Power-up Step One.*

© 2024 Microchip Technology Inc. and its subsidiaries

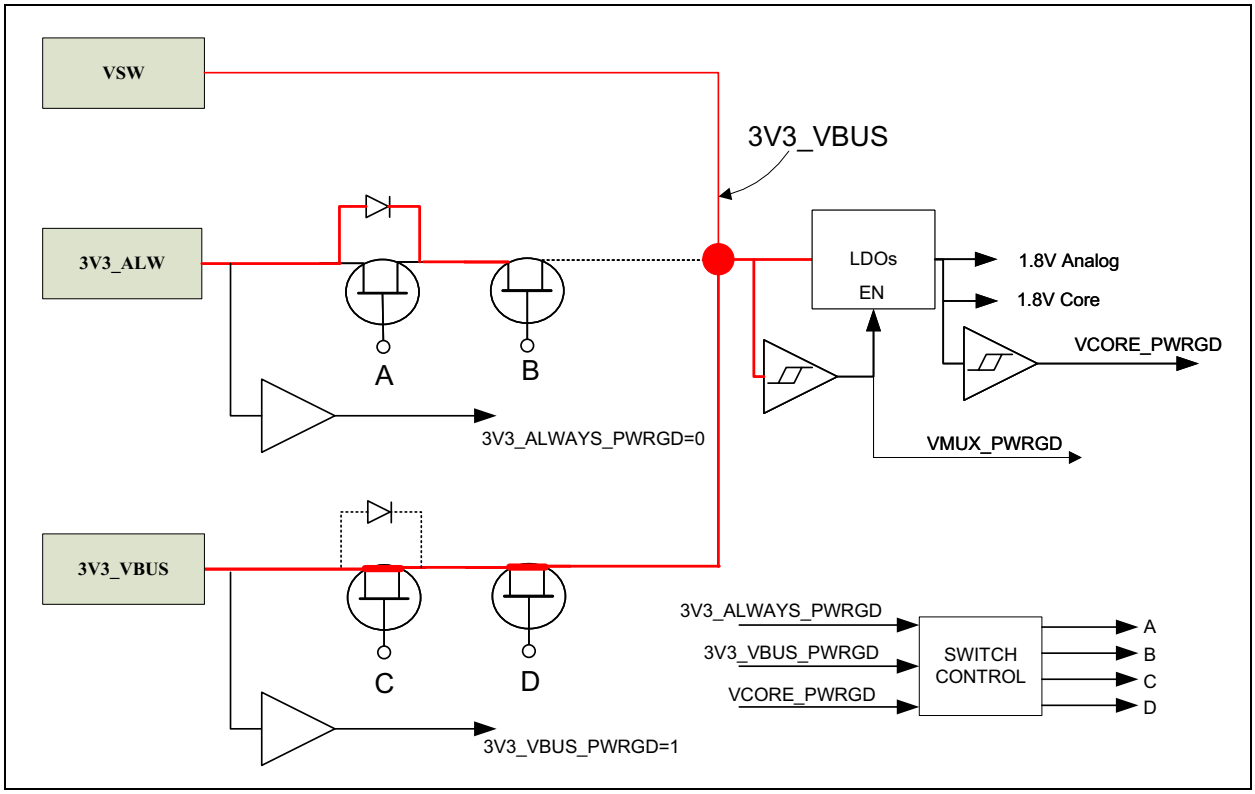

FIGURE 11-7: *Power Switch: VBUS Only Power-up Step Two.*

© 2024 Microchip Technology Inc. and its subsidiaries

11.1.4 VBUS POWERED UP FOLLOWED BY 3V3_ALW COMING UP

In this case, VBUS is already powered up and **3V3_ALW** starts to come up (and will take over and power the core). Figure 11-8 shows the VBUS only state.

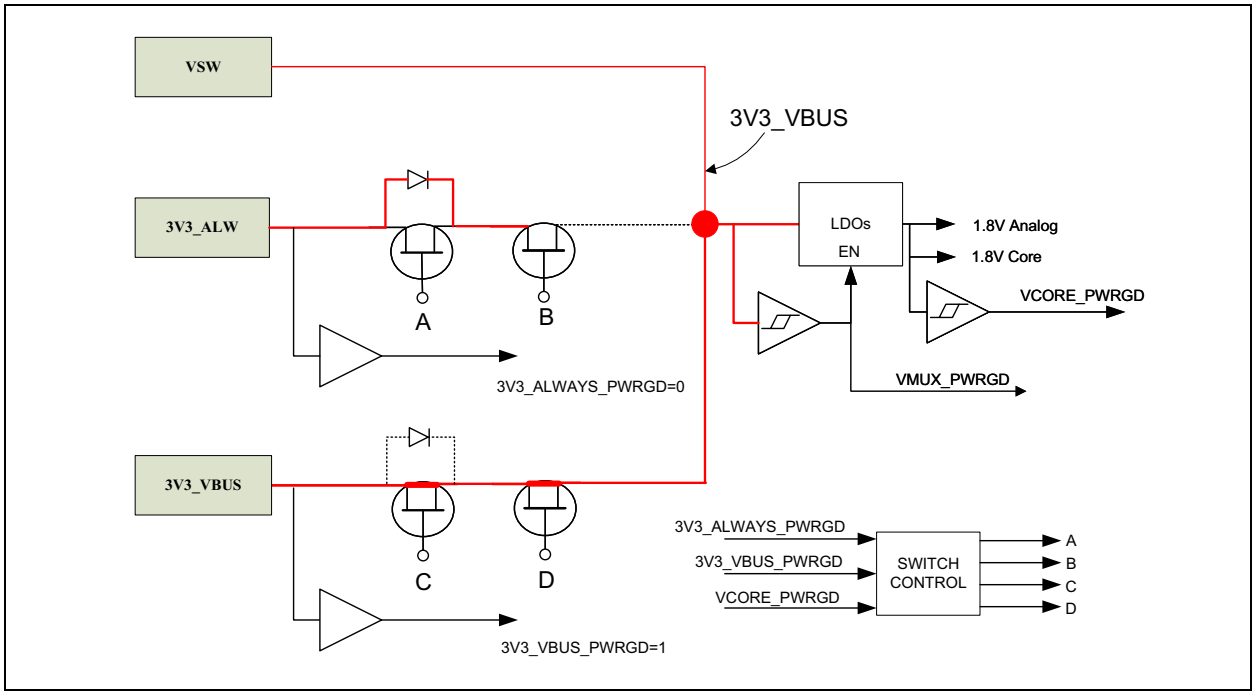

FIGURE 11-8: *Power Switch: VBUS Followed by 3V3_ALW Step One.*

Once 3V3_ALW_PWRGD is detected, FET switch C is opened. The diode is required because **3V3_ALW** could be greater than or less than VBUS. The voltage at the input to the LDO drops to 3V3_VBUS-0.7V.

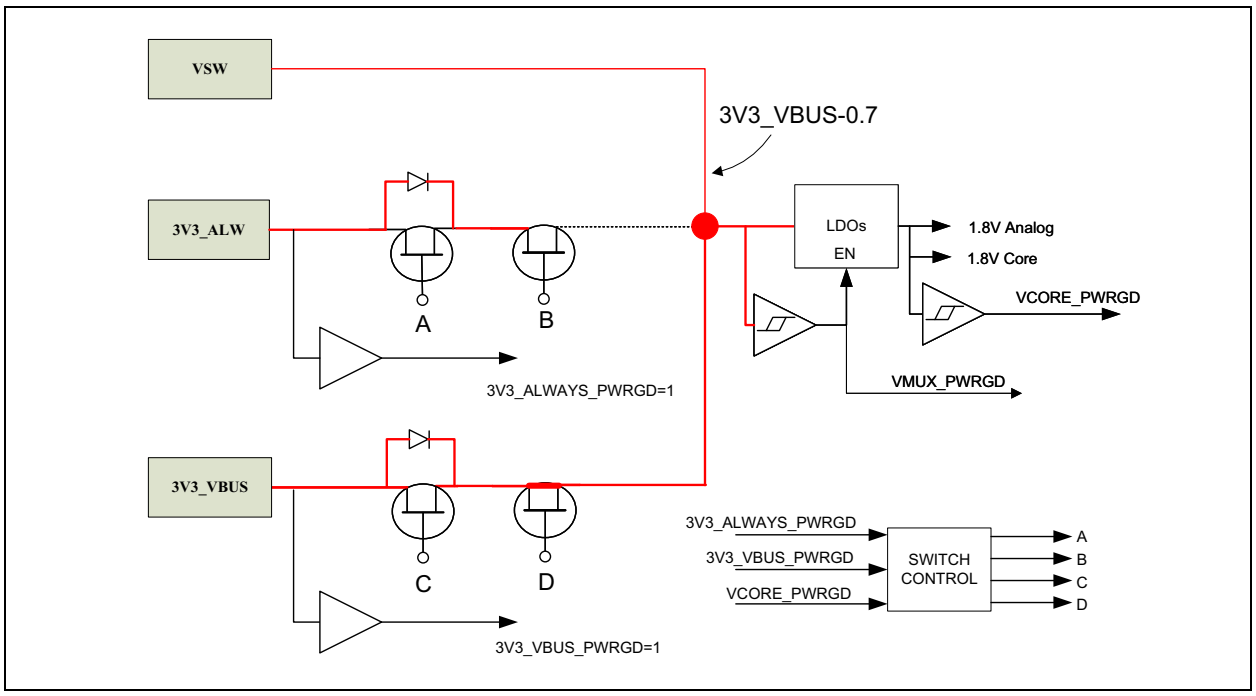

FIGURE 11-9: *Power Switch: VBUS Followed by 3V3_ALW Step Two.*

© 2024 Microchip Technology Inc. and its subsidiaries

50 µs after FET C is opened, FET B is shorted. The two diodes ensure there is no backdrive. The input to the core regulator will be at the higher voltage of VBUS - 0.7V or 3V3_ALW - 0.7V.

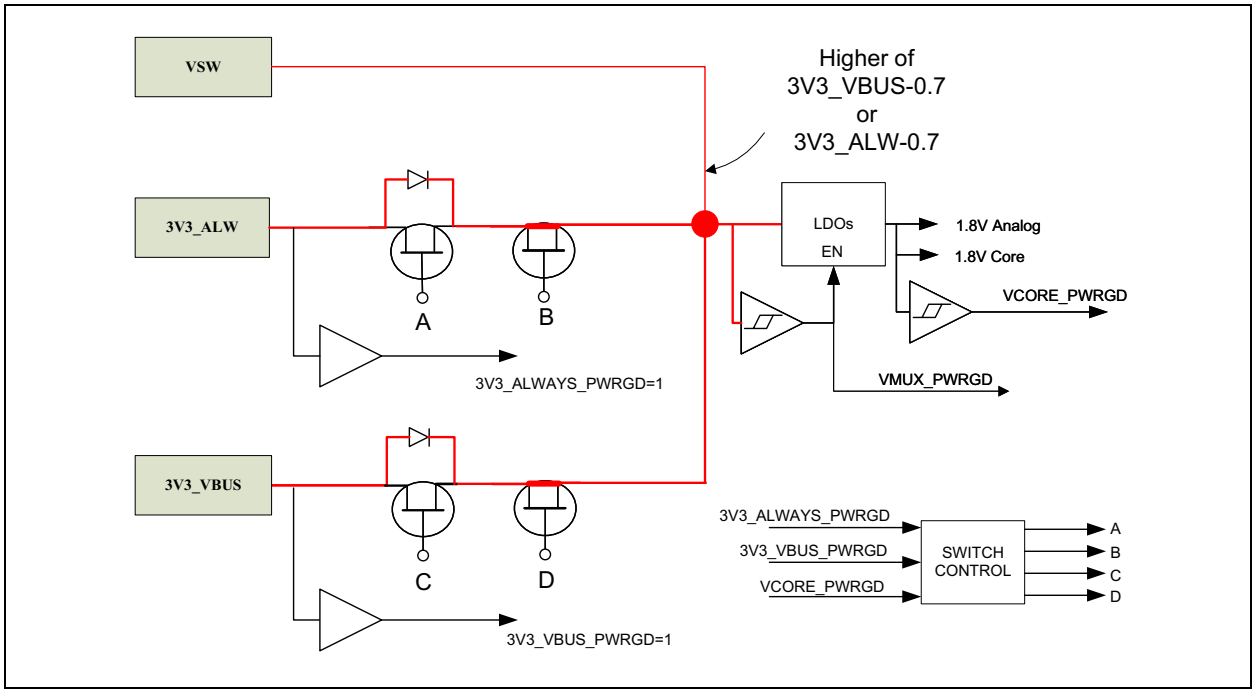

FIGURE 11-10: *Power Switch: VBUS Followed by 3V3_ALW Step Three.*

50 µs after FET B is shorted, FET D is opened. The core regulator input is now 3V3_ALW - 0.7V.

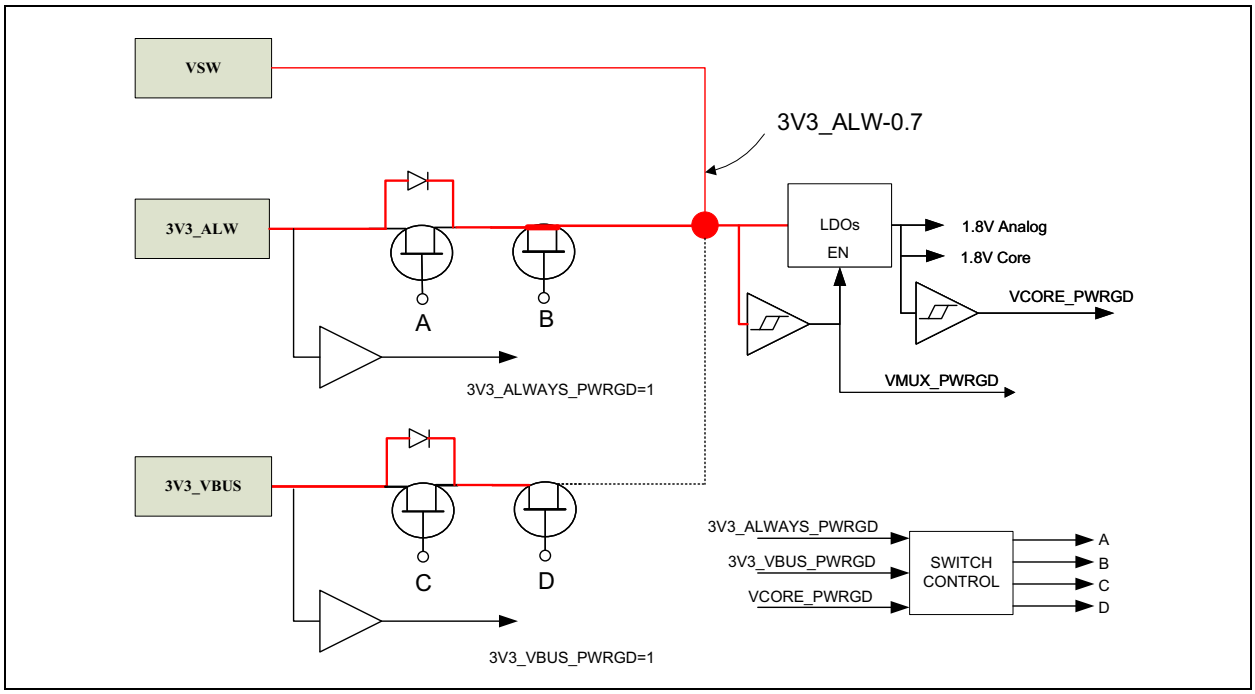

FIGURE 11-11: *Power Switch: VBUS Followed by 3V3_ALW Step Four.*

In the final step, 50 µs after FET D is opened, FET A is shorted. The input to the core regulator now becomes **3V3_ALW**.

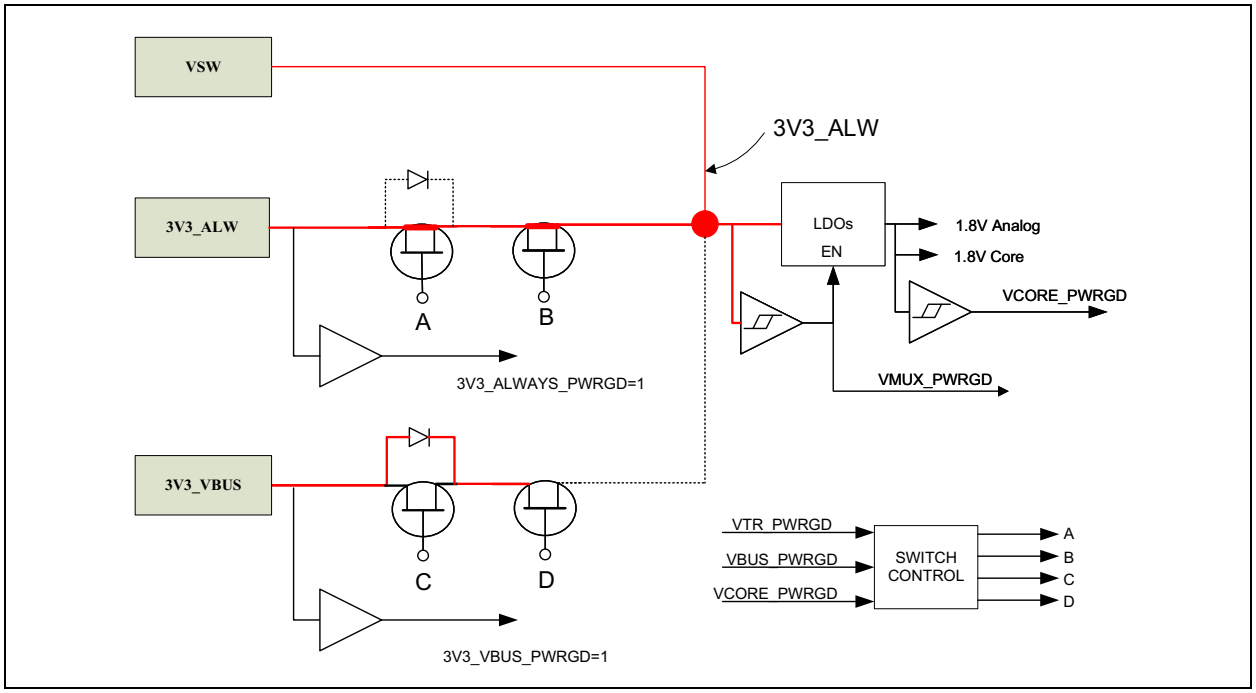

FIGURE 11-12: *Power Switch: VBUS Followed by 3V3_ALW Step Five.*

11.1.5 3V3_ALW POWERED UP FOLLOWED BY VBUS COMING UP

In this case, **3V3_ALW** is already powered up and VBUS starts to come up. **3V3_ALW** will remain the power source for the core, and no changes will be made to the FET switches.

11.1.6 POWERED UP WITH VBUS AND 3V3_ALW, VBUS GOING AWAY

In this case, **3V3_ALW** and VBUS are both present. The core is always powered from **3V3_ALW**. If VBUS goes away, nothing changes in the voltage to the core. An interrupt will be generated to the processor to let it know that VBUS status changed.

11.1.7 POWERED UP WITH VBUS AND 3V3_ALW, 3V3_ALW GOING AWAY

In this case, **3V3_ALW** and VBUS are both present. The core is always powered from **3V3_ALW**. If **3V3_ALW** goes away, the switch will first transition to the initial power-on state, then transition to the VBUS only state.

© 2024 Microchip Technology Inc. and its subsidiaries

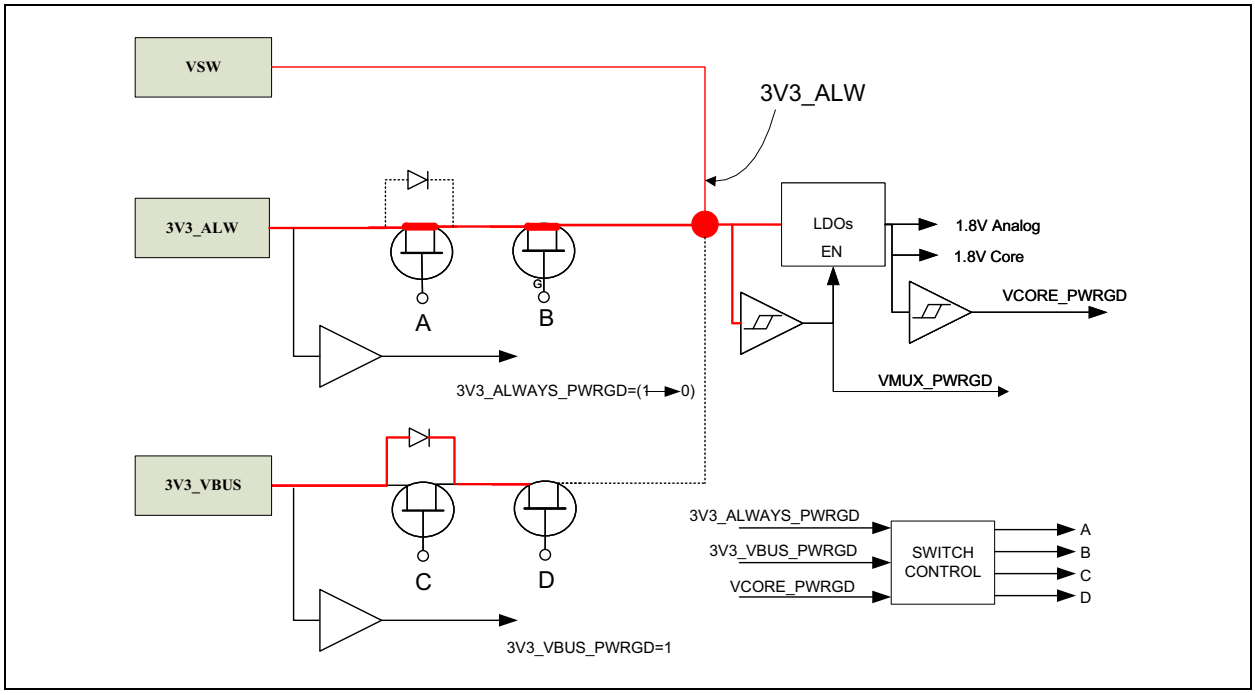

FIGURE 11-13: *Power Switch: VBUS Present, 3V3_ALW Going Away Step One.*

First FET A is opened. The voltage at the core regulator input goes to 3V3_ALW-0.7

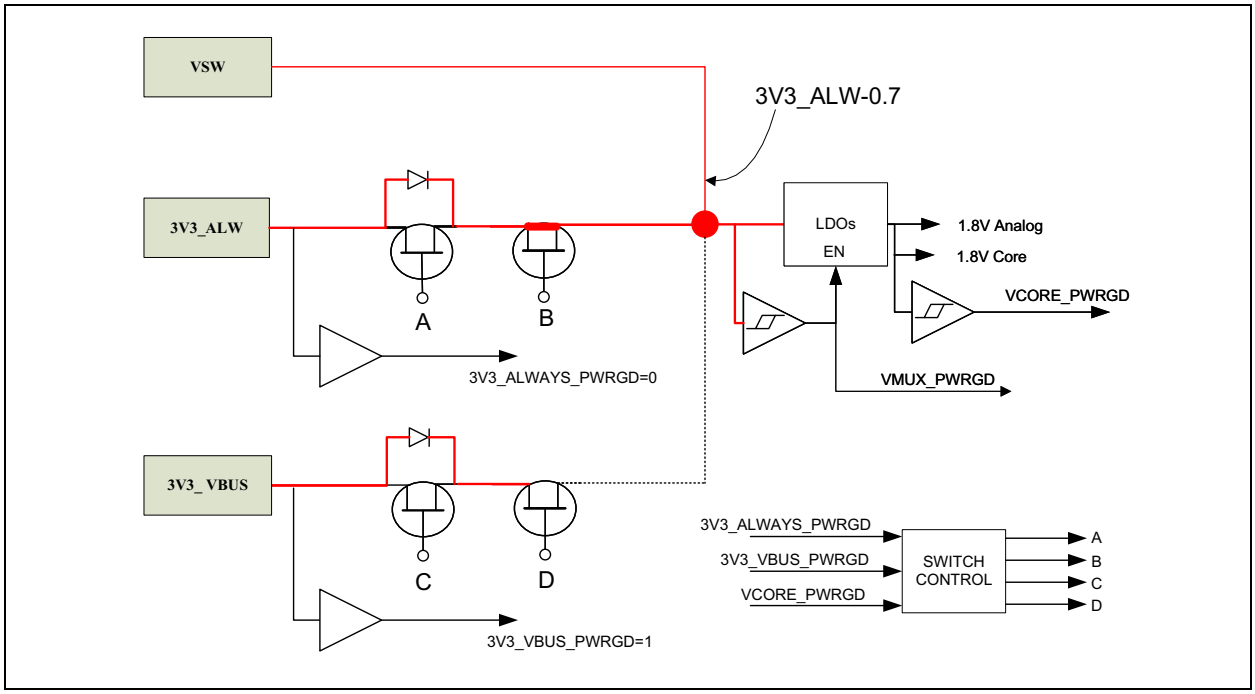

FIGURE 11-14: *Power Switch: VBUS Present, 3V3_ALW Going Away Step Two.*

50 µs later, the FET is closed. The voltage at the input of the core regulator will be the higher of 3V3_ALW-0.7 or 3V3_VBUS -0.7. The core regulator may fall out of regulation.

© 2024 Microchip Technology Inc. and its subsidiaries

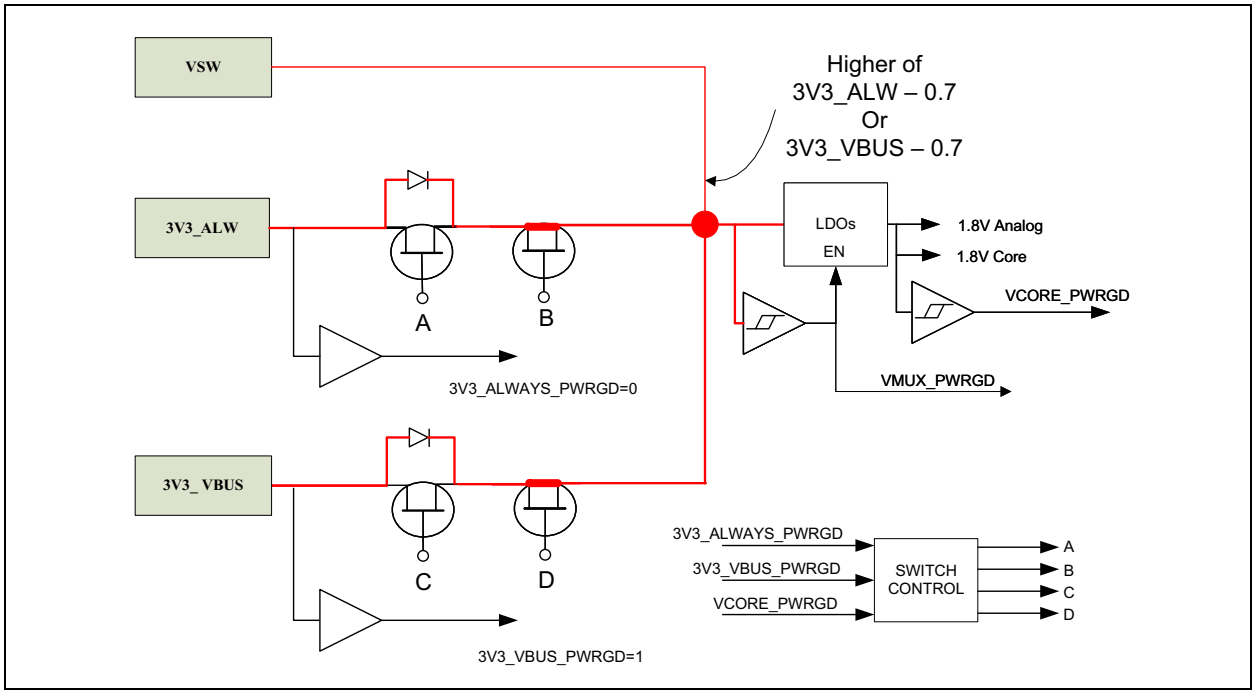

FIGURE 11-15: *Power Switch: VBUS Present, 3V3_ALW Going Away Step Three.*

50 µs later, FET B is opened. The voltage at the input of the core regulator is VBUS-0.7.

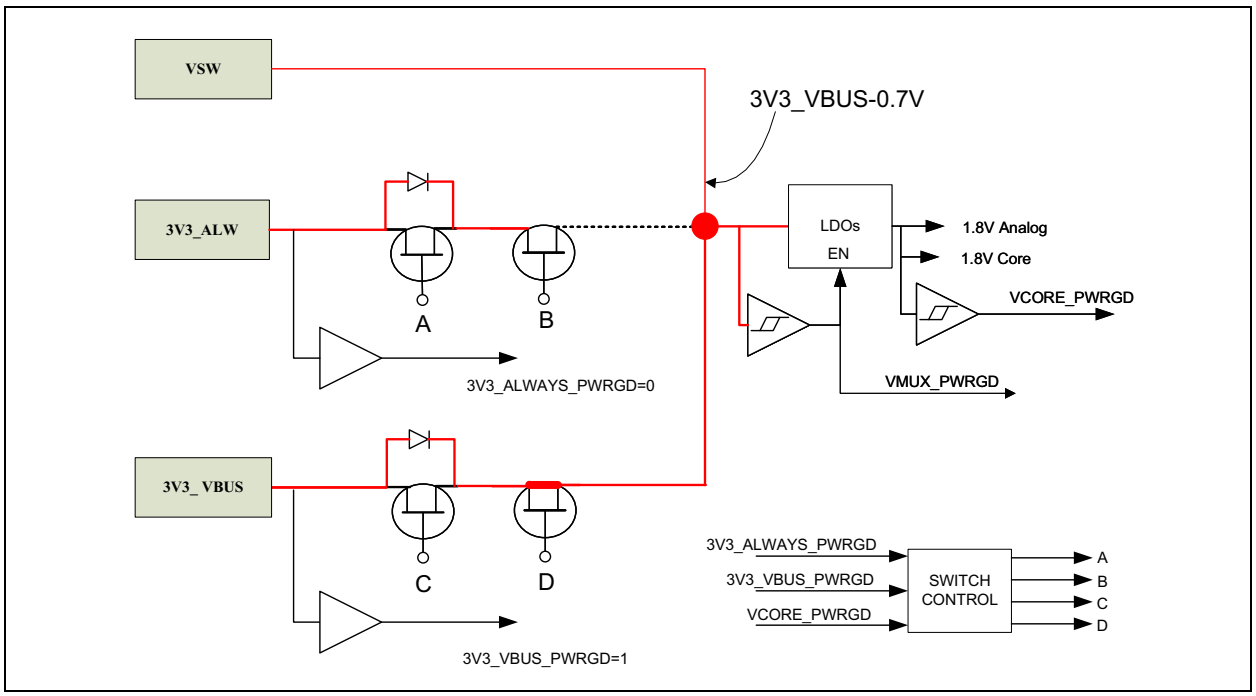

FIGURE 11-16: *Power Switch: VBUS Present, 3V3_ALW Going Away Step Four.*

50 µs later, FET C is shorted. The voltage at the input of the core regulator is 3V3_VBUS.

© 2024 Microchip Technology Inc. and its subsidiaries

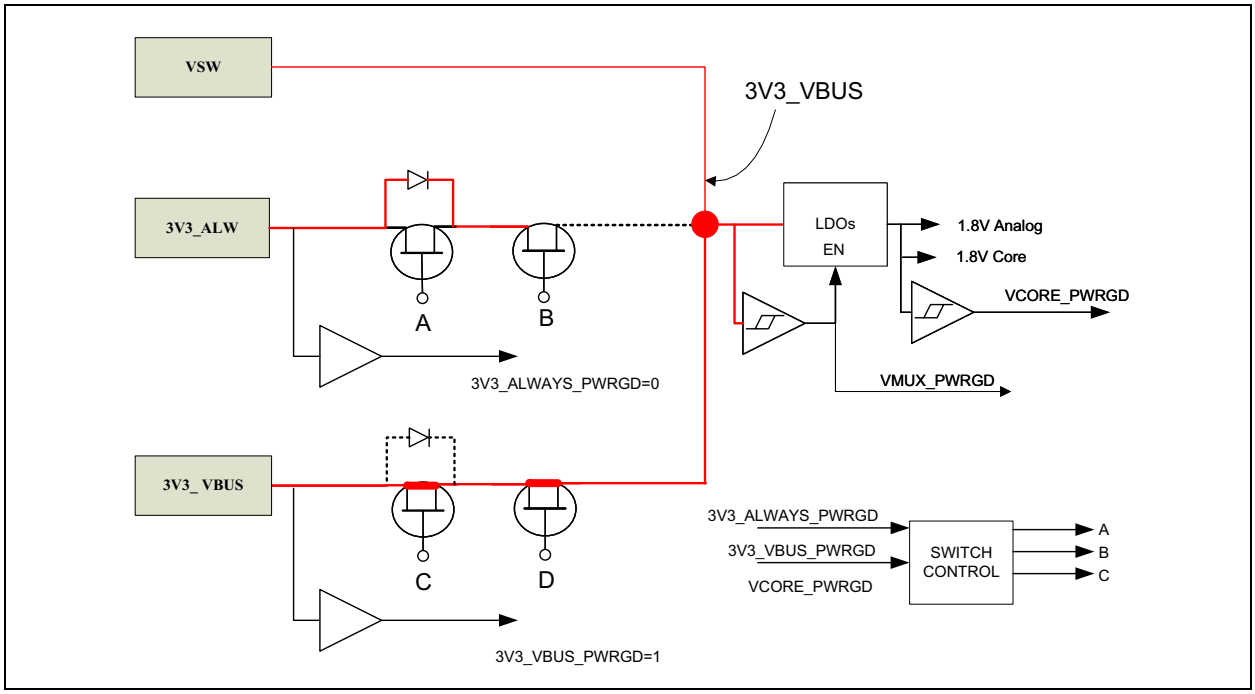

FIGURE 11-17: *Power Switch: VBUS Present, 3V3_ALW Going Away Step Five.*

11.2 Software Override

In the event that both **3V3_VBUS** and **3V3_ALW** are available, the power switch automatically selects **3V3_ALW** for operation. This can be overridden by the software using the VBUS Switch Enable Override (VBUS_SW_EN_OVR) bit of the Power Switch Control Register (PWR_SW_CTL), which forces the switch to operate off of VBUS. When this bit is set, the auto-switch mechanism of the switch is disabled.

11.3 Power Switch Interrupts

The power switch interrupt alerts software to changes in the state of the power switch. These events are listed in the Power Switch Interrupt Status Register (PWR_INT_STS). The interrupt persists until the asserted bits in the Power Switch Interrupt Status Register (PWR_INT_STS) are cleared. Individual interrupt events can be a enabled via the Power Switch Interrupt Enable Register (PWR_INT_EN). Power switch interrupt status sources are capable of triggering asynchronous wakes.

11.4 Power Switch Registers

This section details the power switch registers. For an overview of the entire device register map, refer to Section 4.0, "Register Map," on page 13.

TABLE 11-1: POWER SWITCH REGISTER MAP

Address	Register Name (Symbol)
1C00h	Power Switch Control Register (PWR_SW_CTL)
1C01h	Power Switch Status Register (PWR_SW_STS)
1C02h	Power Switch Interrupt Status Register (PWR_INT_STS)
1C03h	Power Switch Interrupt Enable Register (PWR_INT_EN)
1C04h	Power Switch State Status Register (PWR_SW_STATE_STS)
1C05h – 1FFFh	Reserved for future expansion

© 2024 Microchip Technology Inc. and its subsidiaries

11.4.1 POWER SWITCH CONTROL REGISTER (PWR_SW_CTL)

Address: 1C00h Size: 8 bits

Bits	Description	Type	Default
7:2	**RESERVED**	RO	-
1	**Power Switch Enable (PM_SW_ENB)** This active low signal enables the power switch.	R/W	0b
0	**VBUS Switch Enable Override (VBUS_SW_EN_OVR)** When this bit is asserted, the power switch utilizes the **3V3_VBUS** supply. This bit only has meaning if the device is currently operating on **3V3_ALW** and the VBUS supply is present. This bit disables the auto-switch mechanism of the power switch.	R/W	0b

11.4.2 POWER SWITCH STATUS REGISTER (PWR_SW_STS)

Address: 1C01h Size: 8 bits

Bits	Description	Type	Default
7:6	**RESERVED**	RO	-
5	**3V3_ALW POR (3V3_ALW_RDY)** POR output from the main VBAT external supply. Active high when the supply is above 2.85V. Active low when the supply drops below 2.7V.	RO	0b
4	**3V3_VBUS POR (VBUS_RDY)** POR output from the VBUS external supply. Active high when the supply is above 4V. Active low when the supply drops below 2.7V.	RO	0b
3	**RESERVED**	RO	-
2	**PWR_RDY** Indicates power ready on VSW and VDD18 supplies.	RO	1b
1	**3V3_ALW Switch Gate Off (3V3_ALW_SW_OKB)** Indicates state of VSW with respect to **3V3_ALW**. 0: VSW < 3V3_ALW 1: VSW > 3V3_ALW	RO	0b
0	**VBUS Switch Gate Off (VBUS_SW_OKB)** Indicates state of VSW with respect to VBUS. 0: VSW < VBUS 1: VSW > VBUS	RO	0b

© 2024 Microchip Technology Inc. and its subsidiaries

11.4.3 POWER SWITCH INTERRUPT STATUS REGISTER (PWR_INT_STS)

Address: 1C02h Size: 8 bits

Bits	Description	Type	Default
7:6	**RESERVED**	RO	-
5	**3V3_ALW to VBUS Switch Interrupt (3V3_ALW2VBUS_INTR)** This interrupt asserts after the power switch automatically transitions from selecting **3V3_ALW** to selecting VBUS as the power source. Write a '1' to clear this bit. Writes of '0' have no effect. **Note:** Assertion of the VBUS Switch Enable Override (VBUS_SW_EN_OVR) bit causes this interrupt to assert.	R/WC	0b
4	**VBUS to 3V3_ALW Switch Interrupt POR (VBUS23V3_ALW_INTR)** This interrupt asserts after the power switch automatically transitions from selecting VBUS to selecting **3V3_ALW** as the power source. Write a '1' to clear this bit. Writes of '0' have no effect. **Note:** Assertion of the VBUS Switch Enable Override (VBUS_SW_EN_OVR) bit prevents assertion of this interrupt when VBUS is lost and **3V3_ALW** is present.	R/WC	0b
3	**3V3_ALW Lost Interrupt (3V3_ALW_LOST_INTR)** This interrupt asserts when 3V3_ALW POR (3V3_ALW_RDY) transitions from 1 to 0. It indicates that the **3V3_ALW** supply has been lost. Write a '1' to clear this bit. Writes of '0' have no effect.	R/WC	0b
2	**3V3_ALW Ready Interrupt (3V3_ALW_RDY_INTR)** This interrupt asserts when 3V3_ALW POR (3V3_ALW_RDY) transitions from 0 to 1. It indicates that a **3V3_ALW** supply has been detected. Write a '1' to clear this bit. Writes of '0' have no effect.	R/WC	0b
1	**VBUS Lost Interrupt (VBUS_LOST_INTR)** This interrupt asserts when 3V3_VBUS POR (VBUS_RDY) transitions from 1to 0. It indicates that the VBUS supply has been lost. Write a '1' to clear this bit. Writes of '0' have no effect.	R/WC	0b
0	**VBUS Ready Interrupt (VBUS_RDY_INTR)** This interrupt asserts when 3V3_VBUS POR (VBUS_RDY) transitions from 0 to 1. It indicates that a VBUS supply has been detected. Write a '1' to clear this bit. Writes of '0' have no effect.	R/WC	0b

© 2024 Microchip Technology Inc. and its subsidiaries

11.4.4 POWER SWITCH INTERRUPT ENABLE REGISTER (PWR_INT_EN)

Address: 1C03h Size: 8 bits

Bits	Description	Type	Default
7:6	**RESERVED**	RO	-
5	**3V3_ALW2VBUS_EN** When '0', prevents the generation of this interrupt.	R/W	0b
4	**VBUS23V3_ALW_EN** When '0', prevents the generation of this interrupt.	R/W	0b
3	**3V3_ALW_LOST_EN** When '0', prevents the generation of this interrupt.	R/W	0b
2	**3V3_ALW_RDY_EN** When '0', prevents the generation of this interrupt.	R/W	0b
1	**VBUS_LOST_EN** When '0', prevents the generation of this interrupt.	R/W	0b
0	**VBUS_RDY_EN** When '0', prevents the generation of this interrupt.	R/W	0b

11.4.5 POWER SWITCH STATE STATUS REGISTER (PWR_SW_STATE_STS)

This register indicates the current state of the **3V3_ALW** and **3V3_VBUS** switches.

Address: 1C04h Size: 8 bits

Bits	Description	Type	Default
7:2	**RESERVED**	RO	-
1	**VBUS Switch State (3V3_VBUS_STATE)** 0 = **3V3_VBUS** switch is disabled. 1 = **3V3_VBUS** switch is enabled.	RO	0b
0	**3V3_ALW Switch State (3V3_ALW_STATE)** 0 = **3V3_ALW** switch is disabled. 1 = **3V3_ALW** switch is enabled.	RO	0b

© 2024 Microchip Technology Inc. and its subsidiaries

12.0 HDMI/DISPLAYPORT HOT PLUG DETECT (HPD)

12.1 Overview

The device provides hardware offload support for detecting the state of a display port compliant **HPD** input/output pin to the device. This pin may also be used to implement HDMI alternate mode.

The USB Type-C DisplayPort Alternate Mode Specification defines the **HPD** state in terms of two status flags:

- **HPD_STATE**: Indicates whether the HPD's logical state is high or low (denoted as HPD_HIGH or HPD_LOW, respectively). For the purposes of communicating the HPD state over USB, the logical state of HPD is considered as remaining high while receiving an IRQ_HPD, and is low during the time that HPD is being debounced on a new mechanical connection. The logical state of HPD transitions from high-to-low when a low level on the HPD link has been detected for 2ms (i.e., longer than the maximum IRQ_HPD pulse detection time). The logical state of HPD is unchanged during glitches (as specified in DP v1.3) on the HPD link.
- **IRQ_HPD**: Indicates an IRQ_HPD (i.e., a high-to-low transition on HPD followed by a low-to-high transition was detected between 250 µs and 2ms later, as specified in DP v1.3).

Note:	The **HPD** pin is configured as an input in DisplayPort Source applications, and is configured as a push/pull driver in DisplayPort Sink applications.

Note:	HDMI Alternate mode requires a 5V level shifter to generate the HPD output. Since the **HPD** pin is 5V tolerant, it can safely be connected directly to HPD when operating as a receiver.

12.2 HPD Receiver

The device provides HPD detection (input) via the **HPD** pin. HPD detection is enabled by setting the HPD Enable bit and configuring the **HPD** pin to be an input via HPD Configuration in HPD Control Register (HPD_CTL). Upon setting this bit, the device continuously monitors the state of the **HPD** pin as follows:

- When an IRQ_HPD event occurs, the IRQ_HPD interrupt bit in HPD Interrupt Status Register (HPD_INT_STS) will assert. IRQ_HPD is detected when **HPD** is initially high and de-asserts for a time greater than or equal to the value in the IRQ_HPD Minimum Time Register (IRQ_HPD_MIN_TIME) and less than or equal to the value in the IRQ_HPD Maximum Time Register (IRQ_HPD_MAX_TIME).
- When a low-to-high transition is debounced and detected, the HPD_HIGH interrupt bit in HPD Interrupt Status Register (HPD_INT_STS) will assert. HPD_HIGH is detected when the **HPD** pin is initially low and asserts for a time greater than or equal to the value in the HPD High Detect Time Register (HPD_HIGH_DET_TIME).
- When a high-to-low transition is debounced and detected, the HPD_LOW interrupt bit in HPD Interrupt Status Register (HPD_INT_STS) will assert. HPD_LOW is detected when the **HPD** pin is initially low and asserts for a time greater than or equal to the value in the HPD Low Detect Time Register (HPD_LOW_DET_TIME).

APPLICATION NOTE: The HPD Interrupt Status Register (HPD_INT_STS) contents are reset to 00h when HPD Enable is cleared.

APPLICATION NOTE: Enabled and asserted interrupts trigger the HPD_INT interrupt in the Interrupt Status Register (INT_STS).

A mechanism has been added via the HPD Event Queue Register (HPD_QUEUE) to record up to four **HPD** events. This function is enabled when HPD Enable is set and HPD Configuration indicates the **HPD** pin is operating as an input. See Section 12.4.4, "HPD Event Queue Register (HPD_QUEUE)," on page 169 for additional details.

APPLICATION NOTE: The state of the **HPD** pin is available by reading the HPD State in HPD Control Register (HPD_CTL).

This feature is used as follows:

1. Software configures IRQ_HPD Minimum Time Register (IRQ_HPD_MIN_TIME), IRQ_HPD Maximum Time Register (IRQ_HPD_MAX_TIME), HPD High Detect Time Register (HPD_HIGH_DET_TIME) and HPD Low Detect Time Register (HPD_LOW_DET_TIME). To comply with the DisplayPort specification for IRQ_HPD, the IRQ_HPD Minimum Time Register (IRQ_HPD_MIN_TIME) and IRQ_HPD Maximum Time Register (IRQ_HPD_MAX_TIME) should be configured to 250 us and 2 ms, respectively. Likewise, HPD Low Detect Time Register (HPD_LOW_DET_TIME) should be configured to greater than 2 ms.
2. If desired, interrupts may be enabled by asserting the respective bits in the HPD Interrupt Enable Register (HPD_INT_EN).
3. HPD Enable is set and HPD Configuration is cleared in the HPD Control Register (HPD_CTL).

© 2024 Microchip Technology Inc. and its subsidiaries

4. When a Hot Plug event occurs, the HPD Event Queue Register (HPD_QUEUE) is updated and an interrupt will assert if configured.
5. HPD state changes are reflected by assertion of the QUEUE_NOT_EMPTY, HPD_HIGH, HPD_LOW and IRQ_HPD bits in HPD Interrupt Status Register (HPD_INT_STS). They may cause assertion of HPD_INT in the Interrupt Status Register (INT_STS), if enabled.
6. Software reads the HPD Event Queue Register (HPD_QUEUE) to determine the Hot Plug events received.
7. Software writes to the HPD Event Queue Register (HPD_QUEUE) and clears the valid entries.

12.3 HPD Transmission

The device provides HPD transmission (output) via the **HPD** pin. This is done via the HPD Control Register (HPD_CTL) by setting both HPD Configuration and HPD Enable to “1”. The value driven on the HPD pin is controlled by HPD Output Value.

Support is also provided for generating an IRQ_HPD. This is accomplished by programming the deassertion time in HPD IRQ Generation Time Register (HPD_IRQ_GEN) and then setting Generate IRQ in HPD Control Register (HPD_CTL). Generate IRQ self clears after the interrupt pulse is issued.

This feature is used as follows:

1. Configure the **HPD** pin as an output by setting HPD Configuration and HPD Enable in HPD Control Register (HPD_CTL). The value for **HPD** is defined by the value programmed in HPD Output Value.
2. If it is desired to generate an IRQ_HPD, the HPD IRQ Generation Time Register (HPD_IRQ_GEN) must be programmed with the desired HPD deassertion time.
3. If it is desired to receive an interrupt upon generation of IRQ_HPD, the respective bit in the HPD Interrupt Enable Register (HPD_INT_EN) should be enabled.
4. Software requests IRQ_HPD generation by setting Generate IRQ in the HPD Control Register (HPD_CTL). HPD Output Value must also be set to 1b or the request will have no meeting.
5. Upon generating the IRQ_HPD interrupt, the Generate IRQ bit will self clear.
6. The IRQ_HPD bit asserts in the HPD Interrupt Status Register (HPD_INT_STS) and shall cause assertion of the HPD_INT interrupt in the Interrupt Status Register (INT_STS), if enabled.

12.4 DisplayPort HPD Registers

This section details the DisplayPort HPD registers. For an overview of the entire device register map, refer to Section 4.0, "Register Map," on page 13.

TABLE 12-1: DISPLAYPORT HPD REGISTER MAP

Address	Register Name (Symbol)
0C00h	HPD Control Register (HPD_CTL)
0C01h	HPD Interrupt Status Register (HPD_INT_STS)
0C02h	HPD Interrupt Enable Register (HPD_INT_EN)
0C03h	HPD Event Queue Register (HPD_QUEUE)
0C04h	IRQ_HPD Minimum Time Register (IRQ_HPD_MIN_TIME)
0C05h	IRQ_HPD Maximum Time Register (IRQ_HPD_MAX_TIME)
0C06h	HPD High Detect Time Register (HPD_HIGH_DET_TIME)
0C08h	HPD Low Detect Time Register (HPD_LOW_DET_TIME)
0C0Ah	HPD IRQ Generation Time Register (HPD_IRQ_GEN)
0C0Bh – 0FFFh	Reserved for future expansion

Note: RESERVED address space must not be written under any circumstances. Failure to heed this warning may result in untoward operation and unexpected results.

© 2024 Microchip Technology Inc. and its subsidiaries

12.4.1 HPD CONTROL REGISTER (HPD_CTL)

Address: 0C00h Size: 8 bits

Bits	Description	Type	Default
7	**HPD State** Provides the state of the **HPD** pin. This bit resets to 0b when HPD Enable is cleared. **Note:** An IRQ_HPD event is recorded as an HPD_HIGH state. **Note:** This bit is valid when HP is configured as an input or output.	RO	-
6:4	**RESERVED**	RO	-
3	**HPD Output Value** This bit only has meaning when the **HPD** pin is configured as an output per HPD Configuration. Otherwise, it will always read 0b.	R/W	0b
2	**Generate IRQ** When set, the **HPD** pin generates an HPD IRQ by deasserting **HPD** for the amount of time defined in the HPD IRQ Generation Time Register (HPD_IRQ_GEN). This bit only has meaning when the **HPD** pin is configured as an output per HPD Configuration. Otherwise, it will always read 0b. **Note:** HPD Output Value must be set to 1b before using this feature. **Note:** Software may not change the state of this bit while HPD Enable is set to 1b.	R/SC	0b
1	**HPD Configuration** 0: **HPD** is configured as an input 1: **HPD** is configured as an output **Note:** Software may not change the state of this bit while HPD Enable is set to 1b.	R/W	0b
0	**HPD Enable** When set, the **HPD** pin is enabled.	R/W	0b

© 2024 Microchip Technology Inc. and its subsidiaries

12.4.2 HPD INTERRUPT STATUS REGISTER (HPD_INT_STS)

Address: 0C01h Size: 8 bits

The contents of this register reset to 00h when the HPD Enable bit in the HPD Control Register (HPD_CTL) is cleared.

BITS	DESCRIPTION	TYPE	DEFAULT
7:4	**RESERVED**	RO	-
3	**QUEUE_NOT_EMPTY** Indicates that the HPD Event Queue Register (HPD_QUEUE) is not empty. **Note:** This interrupt is cleared after the HPD Event Queue Register (HPD_QUEUE) is read. **Note:** This bit only has meaning when the **HPD** pin is configured as an input.	RO	0b
2	**HPD_HIGH** When set, indicates that an **HPD** low-to-high transition has been detected. **Note:** The source of this input is a pulse and does not persist after being cleared. **Note:** This bit only has meaning when the **HPD** pin is configured as an input.	R/WC	0b
1	**HPD_LOW** When set, indicates that an **HPD** high-to-low transition has been detected. **Note:** The source of this input is a pulse and does not persist after being cleared. **Note:** This bit only has meaning when the **HPD** pin is configured as an input.	R/WC	0b
0	**IRQ_HPD** When set, indicates that an HPD IRQ has been detected. **Note:** The source of this input is a pulse and does not persist after being cleared. **Note:** When the **HPD** pin is configured as an input, this bit indicates that an IRQ_HPD has been detected. When the **HPD** pin is configured as an output, this pin indicates that the request to generate an IRQ_HPD has completed.	R/WC	0b

12.4.3 HPD INTERRUPT ENABLE REGISTER (HPD_INT_EN)

Address: 0C02h Size: 8 bits

BITS	DESCRIPTION	TYPE	DEFAULT
7:4	**RESERVED**	RO	0h
3:0	**HPD Interrupt Enable** When “0”, prevents generation of the respective interrupt.	R/W	0h

© 2024 Microchip Technology Inc. and its subsidiaries

12.4.4 HPD EVENT QUEUE REGISTER (HPD_QUEUE)

Address: 0C03h Size: 8 bits

This register implements a circular queue that records HPD events detected by the device.

As an event is detected, it is written into the next HPD event status field that is available and initially starts at HPD Event 0 out of Reset.

After this register is read, any entries with a valid HPD event field are cleared when software writes 01b into the respective locations. The device will keep track of the last valid entry and store the next received event into the next entry. For example, if entries 0 and 1 are valid, the device will always place the next event into location 2, regardless of whether or not entries 0 and 1 have been cleared by software.

The device will only add entries to empty fields. After writing to HPD Event 3, the device will write the next event into HPD Event 0, if available.

Each field is encoded as follows.

- 00b: HPD event field is empty
- 01b: HPD_HIGH detected
- 10b: HPD_LOW detected
- 11b: HPD_IRQ detected

When HPD Enable is set to 0b and/or HPD Configuration is set to 1b, this register will always read 00h.

After four HPD events are recorded, any future HPD events shall be ignored until HPD event locations are freed up by software.

BITS	DESCRIPTION	TYPE	DEFAULT
7:6	**HPD Event 3**	R/WC	00b
5:4	**HPD Event 2**	R/WC	00b
3:2	**HPD Event 1**	R/WC	00b
1:0	**HPD Event 0**	R/WC	00b

12.4.5 IRQ_HPD MINIMUM TIME REGISTER (IRQ_HPD_MIN_TIME)

Address: 0C04h Size: 8 bits

BITS	DESCRIPTION	TYPE	DEFAULT
7:0	**IRQ HPD Minimum Time** This field defines the minimum amount of time that HPD must be deasserted for an IRQ event to be recognized. Deassertions for less than this amount of time shall be ignored. The programmed time is (50 µs * IRQ_HPD_MIN_TIME) + 100 µs. **Note:** Software may not change the state of this register while HPD Enable is set to 1b.	R/W	0h

12.4.6 IRQ_HPD MAXIMUM TIME REGISTER (IRQ_HPD_MAX_TIME)

Address: 0C05h Size: 8 bits

BITS	DESCRIPTION	TYPE	DEFAULT
7:0	**IRQ HPD Maximum Time** This field defines the maximum amount of time that **HPD** shall be deasserted for an IRQ event to be recognized. Assertions for more than this amount of time shall not be determined to be an HPD interrupt event. The programmed time is (50 us * IRQ_HPD_MAX_TIME) + 100 us. **Note:** Software may not change the state of this register while HPD Enable is set to 1b.	R/W	0h

12.4.7 HPD HIGH DETECT TIME REGISTER (HPD_HIGH_DET_TIME)

Address: 0C06h Size: 16 bits

BITS	DESCRIPTION	TYPE	DEFAULT
15:0	**HPD High Detect Time** This field defines the amount of time that **HPD** must be asserted, after initially being low, in order to detect an HPD_HIGH event. The programmed time is (50 us * HPD_HIGH_DET_TIME) + 100 us. **Note:** Software may not change the state of this register while HPD Enable is set to 1b.	R/W	0h

12.4.8 HPD LOW DETECT TIME REGISTER (HPD_LOW_DET_TIME)

Address: 0C08h Size: 16 bits

BITS	DESCRIPTION	TYPE	DEFAULT
15:0	**HPD Low Detect Time** This field defines the amount of time that **HPD** must be deasserted, after initially being high, in order to detect an HPD_LOW event. The programmed time is (50 us * HPD_LOW_DET_TIME) + 100 us. **Note:** Software may not change the state of this register while HPD Enable is set to 1b.	R/W	0h

© 2024 Microchip Technology Inc. and its subsidiaries

12.4.9 HPD IRQ GENERATION TIME REGISTER (HPD_IRQ_GEN)

Address: 0C0Ah Size: 8 bits

BITS	DESCRIPTION	TYPE	DEFAULT
7:0	**HPD IRQ Generation Time** This field defines the amount of time, in units of 50 µs, that **HPD** shall be deasserted after the Generate IRQ bit in the HPD Control Register (HPD_CTL) is set. After this amount of time, the **HPD** pin will be returned to the state defined in HPD Output Value. **Note:** Software may not change the state of this register while HPD Enable is set to 1b.	R/W	0h

13.0 WATCHDOG TIMER (WDT)

13.1 General Description

The function of the Watchdog Timer (WDT) is to provide a mechanism to detect if the device has failed.

When enabled, the Watchdog Timer circuit will generate a WDT initiated system Reset if the user program fails to reload the WDT within a specified length of time known as the WDT Interval.

The Watchdog Timer operates off of the 20 KHz Keep Alive Oscillator or 48 MHz Relaxation Oscillator, depending on the resolution selected by the WDT_UNITS bit in Watchdog Control Register (WDT_CTL).

A Watchdog Timer initiated system Reset is indicated by assertion of the WDT_INT bit in the Interrupt Enable Register (INT_EN). In order to clear the WDT_INT bit, the WDT_STS bit in Watchdog Control Register (WDT_CTL) must be cleared.

13.2 WDT Operation

13.2.1 WDT ACTIVATION MECHANISM

The WDT is activated by the following sequence of operations during normal operation:

1. Clear the WDT_EN bit of Watchdog Control Register (WDT_CTL).
2. Load the Watchdog Load Register (WDT_LOAD) with the count value.
3. Set the WDT_EN bit of Watchdog Control Register (WDT_CTL).

The WDT Activation Mechanism starts the WDT decrementing counter.

13.2.2 WDT DEACTIVATION MECHANISM

The WDT is deactivated by clearing the WDT_EN bit in the Watchdog Control Register (WDT_CTL). The WDT Reload Mechanism places the WDT in a low-power state in which clocks are gated and the counter stops decrementing.

13.2.3 WDT RELOAD MECHANISM

If the WDT is not reloaded within periods that are shorter than the programmed watchdog interval, the WDT will underflow, a WDT Reset will be generated and the WDT_STS bit will be set in the Watchdog Control Register (WDT_CTL).

It is the responsibility of software to continually execute sections of code which reload the Watchdog Timer (WDT), causing the counter to be reloaded via the WDT Activation Mechanism or writing to the Watchdog Kick Register (WDT_KICK).

13.2.4 WDT INTERVAL

The WDT Interval is the time it takes for the WDT to decrement from the Watchdog Load Register (WDT_LOAD) value to 0h.

13.3 SPI Writes

When a watchdog interrupt is pending, all write operations are blocked until the interrupt WDT_STS bit in the Watchdog Control Register (WDT_CTL) is cleared.

© 2024 Microchip Technology Inc. and its subsidiaries

13.4 Watchdog Timer Registers

This section details the Watchdog Timer registers. For an overview of the entire device register map, refer to Section 4.0, "Register Map," on page 13.

TABLE 13-1: WATCHDOG TIMER REGISTER MAP

Address	Register Name (Symbol)
3000h	Watchdog Control Register (WDT_CTL)
3002h	Watchdog Kick Register (WDT_KICK)
3004h	Watchdog Count Register (WDT_COUNT)
3008h	Watchdog Load Register (WDT_LOAD)
300Ch – 33FFh	Reserved for future expansion

Note: RESERVED address space must not be written under any circumstances. Failure to heed this warning may result in untoward operation and unexpected results.

13.4.1 WATCHDOG CONTROL REGISTER (WDT_CTL)

Address: 3000h Size: 16 bits

Bits	Description	Type	Default
15:4	**RESERVED**	RO	0h
3	**WDT_UNITS** 0: Units of 1 ms are used. 1: Units of 1 us are used. **Note:** When units of 1 us are used, the 48 MHz Relaxation Oscillator must be enabled and device current consumption will increase by over 400 uA. Otherwise, when units are 1 ms, the 20 KHz Keep Alive Oscillator is used.	R/W	0b
2	**WDT_SIM** Used for speeding up the Watchdog Timer for simulation. Watchdog operates off of a 1 MHz clock when set. When this bit is set, WDT_UNITS shall be set to 1b.	R/W	0b
1	**WDT_STS** WDT Status is set by hardware if the last Reset of the device was caused by an underflow of the WDT. This bit must be cleared by software writing a '1' to this bit. Writing a '0' to this bit has no effect.	R/WC	Note 1:
0	**WDT_EN** When set, the Watchdog Timer is enabled. Clearing this bit disables the Watchdog Timer. **Note:** Due to clock domain synchronization, several clock cycles may elapse before this takes effect and the WDT counter begins to decrement.	R/W	0b

Note 1: Default value depends on whether a WDT initiated Reset occurred, in which the case the value is 1b. Otherwise the value is 0b.

© 2024 Microchip Technology Inc. and its subsidiaries

13.4.2 WATCHDOG KICK REGISTER (WDT_KICK)

Address: 3002h Size: 8 bits

Bits	Description	Type	Default
7:1	**RESERVED**	RO	0h
0	**KICK** Writes of any value to this register shall cause the Watchdog Timer to be immediately reloaded with the value defined in Watchdog Load Register (WDT_LOAD) and start decrementing when the WDT_EN bit in the Watchdog Control Register (WDT_CTL) is set to 1b. Writing to this register when WDT_EN is 0b has no effect. **Note:** Reads of this register always return 0h. **Note:** Due to clock domain synchronization, several clock cycles may elapse before this takes effect and the counter reloads.	R/W	0h

13.4.3 WATCHDOG COUNT REGISTER (WDT_COUNT)

Address: 3004h Size: 32 bits

Bits	Description	Type	Default
31:0	**WDT_COUNT** This read-only register provides a snapshot of the current state of the timer. The lower byte shall always be read first. Reading of the lower order byte results in a snapshot of the counter taken. This ensures that when the upper bytes are read the state of the counter remains in sync.	RO	FFFF_FFFFh

WDT_COUNT[7:0] = 0x4h

WDT_COUNT[15:8] = 0x5h

WDT_COUNT[23:16] = 0x6h

WDT_COUNT[31:24] = 0x7h

© 2024 Microchip Technology Inc. and its subsidiaries

13.4.4 WATCHDOG LOAD REGISTER (WDT_LOAD)

Address: 3008h Size: 32 bits

Bits	Description	Type	Default
31:0	**WDT_LOAD** Writing this register reloads the Watchdog Timer counter. This register can be programmed only when WDT_EN = 0. Zero is not a valid load value.	R/W	FFFF_FFFFh

WDT_LOAD[7:0] = 0x8h

WDT_LOAD[15:8] = 0x9h

WDT_LOAD[23:16] = 0xAh

WDT_LOAD[31:24] = 0xBh

© 2024 Microchip Technology Inc. and its subsidiaries

14.0 OPERATIONAL CHARACTERISTICS

14.1 Absolute Maximum Ratings†

Supply Voltage (**VS**) (Note 1) . . . . . -0.3 V to +6.0 V

Supply Voltage (**VDD33IO**, **3V3_VBUS**, **3V3_ALW**, **VDD18**) (Note 1) . . . . . 0 V to +4.0 V

Positive voltage on input signal pins, with respect to ground . . . . . +6.0 V

Negative voltage on input signal pins, with respect to ground . . . . . -0.5 V

Storage Temperature . . . . . -55°C to +150°C

Lead Temperature Range. . . . . Refer to JEDEC Spec. J-STD-020

HBM ESD Performance . . . . . +/-8 kV

† **Notice:** Stresses exceeding those listed in this section could cause permanent damage to the device. This is a stress rating only. Exposure to absolute maximum rating conditions for extended periods may affect device reliability. Functional operation of the device at any condition exceeding those indicated in Section 14.2, "Operating Conditions‡", Section 14.5, "DC Characteristics", or any other applicable section of this specification is not implied.

Note 1: When powering this device from laboratory or system power supplies, it is important that the absolute maximum ratings not be exceeded or device failure can result. Some power supplies exhibit voltage spikes on their outputs when AC power is switched on or off. In addition, voltage transients on the AC power line may appear on the DC output. If this possibility exists, it is suggested to use a clamp circuit.

14.2 Operating Conditions‡

Supply Voltage (**VS**) . . . . . +4.75 V to +5.25 V

Supply Voltage (**VDD33IO**, **3V3_VBUS**, **3V3_ALW**) . . . . . +3.1 V to +3.47 V

Supply Voltage (**VDD18**) . . . . . +1.62 V to +1.98 V

Positive voltage on input signal pins, with respect to ground . . . . . +3.3 V

Negative voltage on input signal pins, with respect to ground . . . . . -0.3 V

Power Supply Rise Time Max (T_{RT}) (Figure 14-1) . . . . . *100 ms*

Industrial Ambient Operating Temperature in Still Air (T_A) . . . . . -40°C to +85°C

‡ **Notice:** Proper operation of the device is guaranteed only within the ranges specified in this section.

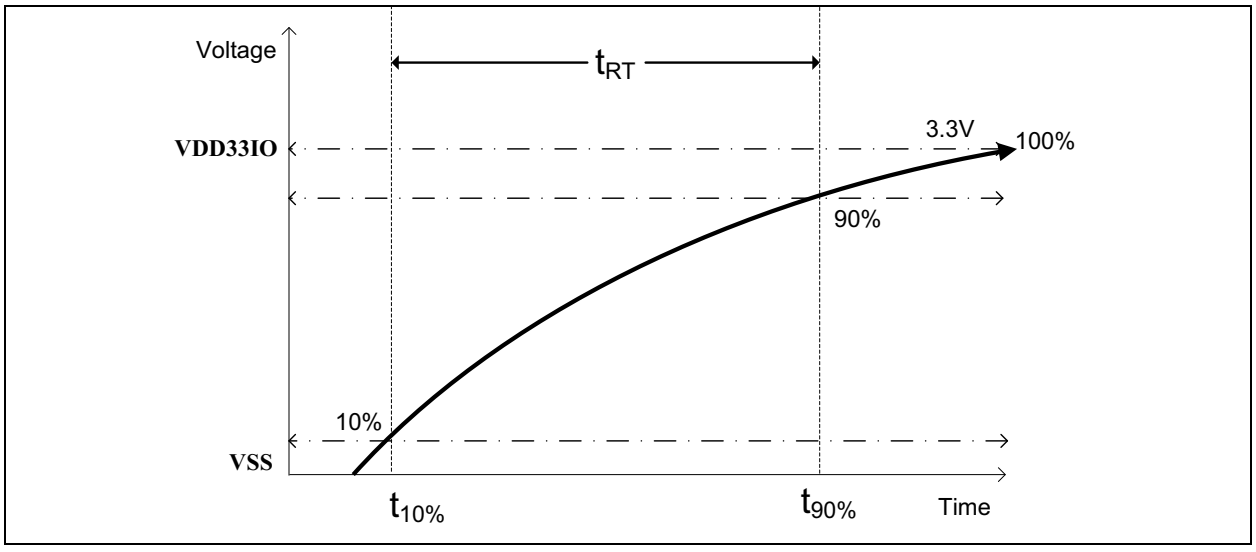

FIGURE 14-1: *Supply Rise Time Model.*

© 2024 Microchip Technology Inc. and its subsidiaries

14.3 Package Thermal Specifications

TABLE 14-1: PACKAGE THERMAL PARAMETERS

Parameter	Symbol	°C/W
Thermal Resistance Junction to Ambient	Θ_{JA}	49
Thermal Resistance Junction to Top of Case	Θ_{JC}	6
Thermal Resistance Junction to Board	Θ_{JB}	29
Thermal Resistance Junction to Bottom of Case	Ψ_{JT}	0.7

Note: Thermal parameters are measured or estimated for devices in a multi-layer 2S2P PCB per JESDN51.

TABLE 14-2: POWER DISSIPATION

Parameter	Symbol	Max	Units
Power Dissipation	P_{dis}	55	mW

Note: This is the worst-case power dissipation as a consequence of maximum loading (before current-limiting protections take effect) upon the internal VBUS power switch, VCONN power switch, 3.3V power-ORing switch, analog blocks, and core digital logic.

14.4 Current Consumption

TABLE 14-3: DEVICE CURRENT CONSUMPTION

Power State	Supply Current		
	Typical	Max	Units
RESET	***110***	**—**	µA
SLEEP	***15***	**—**	µA
HIBERNATE	***80***	**—**	µA
STANDBY	***1.20***	**—**	mA
ATTACHED IDLE (FRS Enabled)	***1.40***	**—**	mA
ATTACHED IDLE (FRS Disabled)	***1.25***	**—**	mA
ACTIVE (with PD packet transmitting)	**—**	***15.0***	mA

Note 1: This table details the power consumption of the MCP22350 device as measured during various modes of operation. Refer to Section 6.2, "Power States" for additional information. Power dissipation is determined by temperature, supply voltage, and external source/sin k requirements. Maximum values represent very short bursts of activity over a small amount of time. Typical values represent averaged current consumption over time.

2: **SLEEP** power state is achieved with **PWR_DN** pin asserted

3: **STANDBY** is equivalent to USB Type-C specification's Unattached.SRC/Unattached.SNK

4: Currents measured with all 3.3V rails tied together.

© 2024 Microchip Technology Inc. and its subsidiaries

14.5 DC Characteristics

TABLE 14-4: DC ELECTRICAL CHARACTERISTICS

Parameter	Symbol	Min	Typ	Max	Units	Notes
IS Type Input Buffer						
Low Input Level	V_{ILI}	-0.3	—	0.8	V	
High Input Level	V_{IHI}	2.0	—	3.6	V	
Negative-Going Threshold	V_{ILT}	1.21	1.33	1.8	V	Schmitt Trigger
Positive-Going Threshold	V_{IHT}	1.31	1.58	1.8	V	Schmitt Trigger
Schmitt Trigger Hysteresis (V_{IHT} - V_{ILT})	V_{HYS}	100	133	200	mV	
Input Leakage (V_{IN} = **VSS** or **VDDIO**)	I_{IH}	-10	—	10	µA	Note 1
Input Capacitance	C_{IN}	—	—	3	pF	
O8 Type Output Buffer						
Low Output Level	V_{OL}	—	—	0.4	V	I_{OL} = -8 mA
High Output Level	V_{OH}	**VDD33IO** – 0.4	—	—	V	I_{OH} = 8 mA
OD8 Type Output Buffer						
Low Output Level	V_{OL}	—	—	0.4	V	I_{OL} = -8 mA

Note 1: This specification applies to all inputs and tri-stated bi-directional pins. Internal pull-down and pull-up resistors add ±50 µA per-pin (typical).

TABLE 14-5: VCONN SOURCE DC PARAMETERS

Parameter	Symbol	Min	Typ	Max	Units	Notes
ILIM	I_{LIM_VCONN}		600		mA	**VS** = 5V
On Resistance	R_{ON_VCONN}		270		mΩ	

TABLE 14-6: POWER SWITCH DC PARAMETERS

Parameter	Symbol	Min	Typ	Max	Units	Notes
VSW Load	VSW_Load			100	mA	**3V3_ALW/3V3_VBUS** = 3.3V
VSW Resistance	R_VSW		500		Ω	

14.6 AC Characteristics and Timing

This section details the various AC timing specifications of the device.

14.6.1 RESET_N TIMING

Figure 14-2 illustrates the **RESET_N** timing requirements. Assertion of **RESET_N** is not a requirement. However, if used, it must be asserted for the minimum period specified.

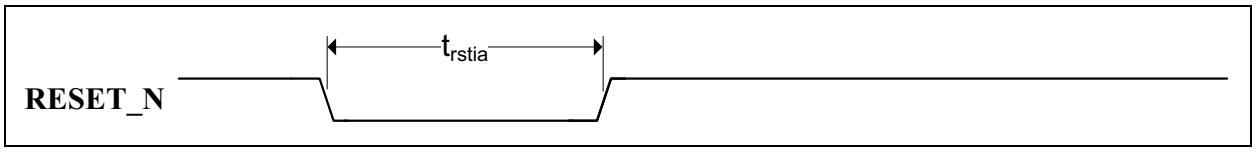

FIGURE 14-2: *RESET_N Timing.*

TABLE 14-7: RESET_N TIMING VALUES

Symbol	Description	Min	Typ	Max	Units
t_{rstia}	**RESET_N** input assertion time	1			µs

© 2024 Microchip Technology Inc. and its subsidiaries

14.6.2 SPI CLIENT INTERFACE

Figure 14-3 and Figure 14-4 illustrate the SPI client interface input and output timing requirements, respectively. Refer to Section 5.0, "SPI Client Controller," on page 14 for additional information.

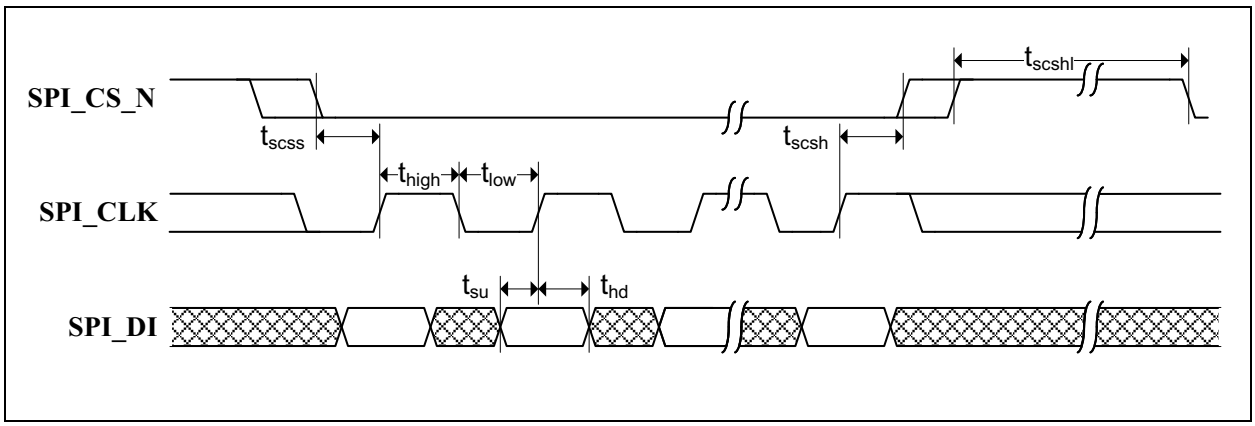

FIGURE 14-3: *SPI Client Input Timing.*

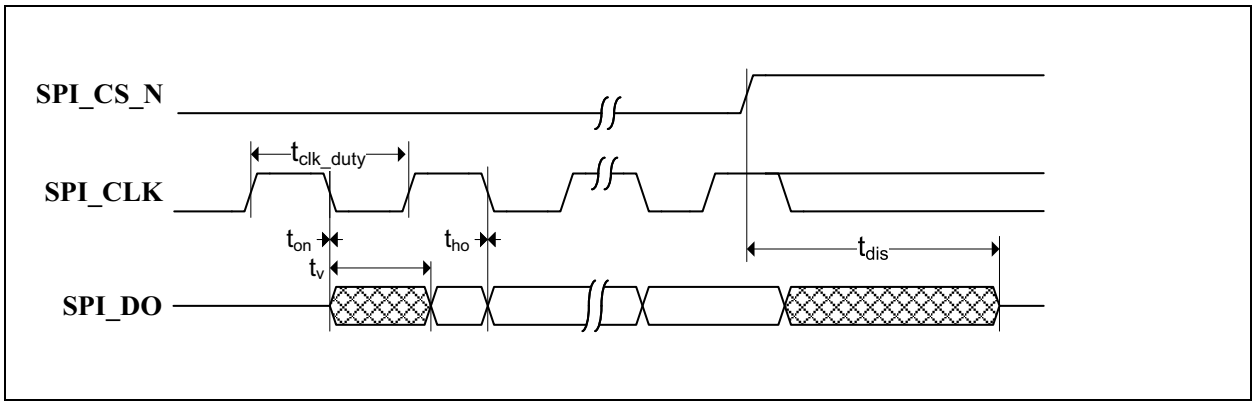

FIGURE 14-4: *SPI Client Output Timing.*

TABLE 14-8: SPI TIMING VALUES

Symbol	Description	Min	Typ	Max	Units
f_{sck}	**SPI_CLK** clock frequency			25	MHz
t_{clk_duty}	**SPI_CLK** high/low duty cycle	40		60	%
t_{scss}	**SPI_CS_N** setup time to **SPI_CLK**	5			ns
t_{scsh}	**SPI_CS_N** hold time from **SPI_CLK**	5			ns
t_{scshl}	**SPI_CS_N** inactive time	100			ns
t_{su}	Data input setup time to **SPI_CLK**	10			ns
t_{hd}	Data input hold time from **SPI_CLK**	4			ns
t_{on}	Data output turn on time from **SPI_CLK**	0			ns
t_v	Data output valid time from **SPI_CLK**			Note 1	ns
t_{ho}	Data output hold time from **SPI_CLK**	0			ns
t_{dis}	Data output disable time from **SPI_CS_N** inactive			20	ns

Note 1: 8.5 or 8.0, depending on loading of 30 pF or 10 pF, respectively.

© 2024 Microchip Technology Inc. and its subsidiaries

15.0 PACKAGE INFORMATION

15.1 Package Marking Information

28-VQFN (4x4x0.9 mm)

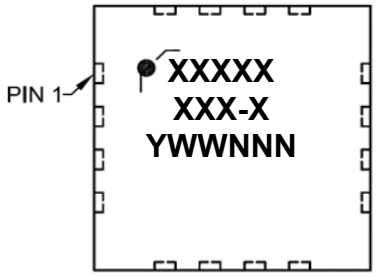

Example

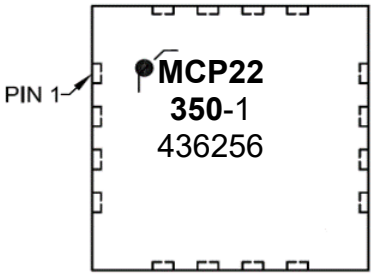

Legend:	XX...X	Product Code or Customer-specific information
	Y	Year code (last digit of calendar year)
	YY	Year code (last 2 digits of calendar year)
	WW	Week code (week of January 1 is week ‘01’)
	NNN	Alphanumeric traceability code
	(e3)	Pb-free JEDEC designator for Matte Tin (Sn)
	*	This package is Pb-free. The Pb-free JEDEC designator ((e3)) can be found on the outer packaging for this package.

Note: In the event the full Microchip part number cannot be marked on one line, it will be carried over to the next line, thus limiting the number of available characters for customer-specific information. Package may or not include the corporate logo.

© 2024 Microchip Technology Inc. and its subsidiaries

28-Lead Plastic Quad Flat, No Lead Package (MK) - 4x4 mm Body [QFN]

Note: For the most current package drawings, please see the Microchip Packaging Specification located at http://www.microchip.com/packaging

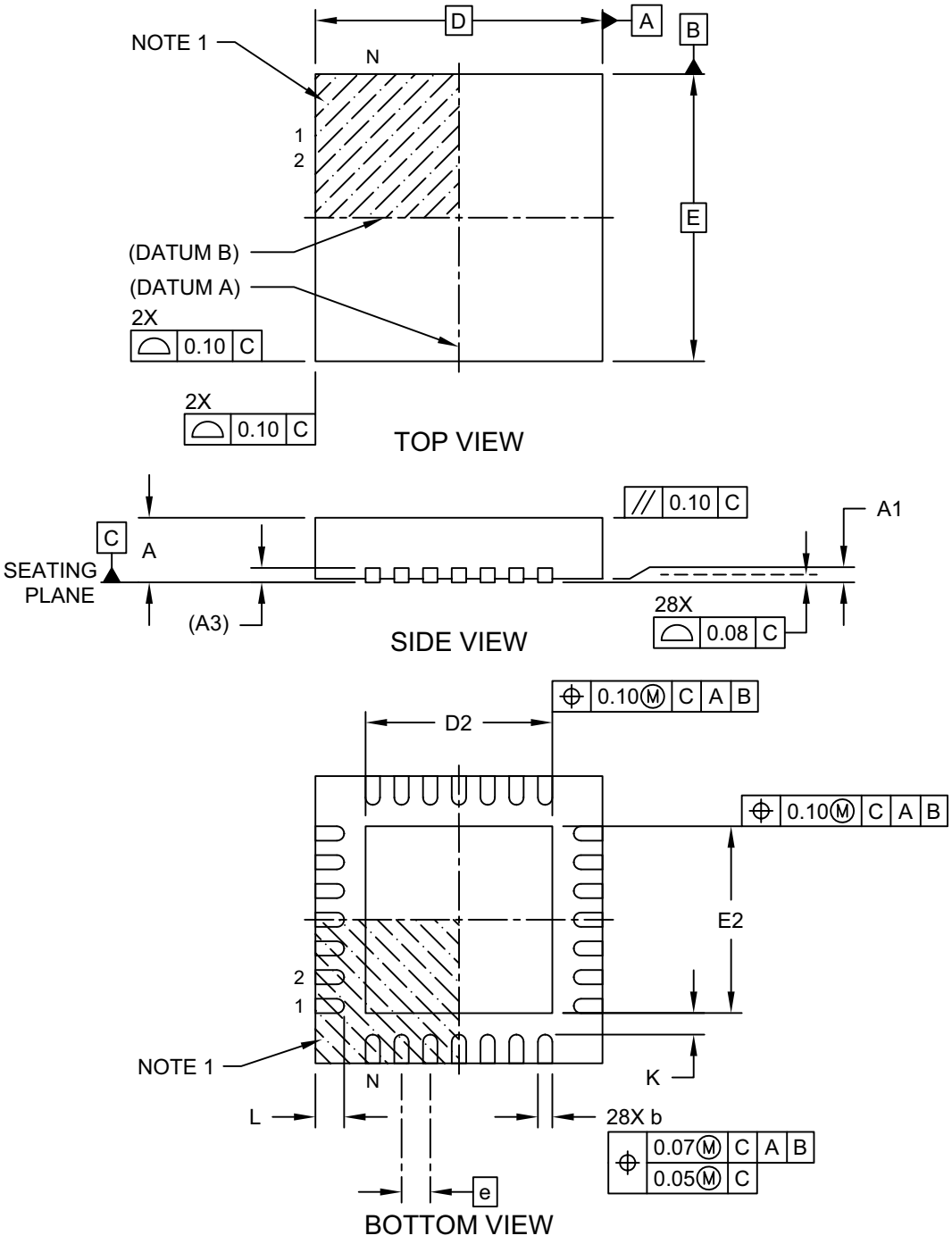

Microchip Technology Drawing C04-144 Rev B Sheet 1 of 2

28-Lead Plastic Quad Flat, No Lead Package (MK) - 4x4 mm Body [QFN]

Note: For the most current package drawings, please see the Microchip Packaging Specification located at http://www.microchip.com/packaging

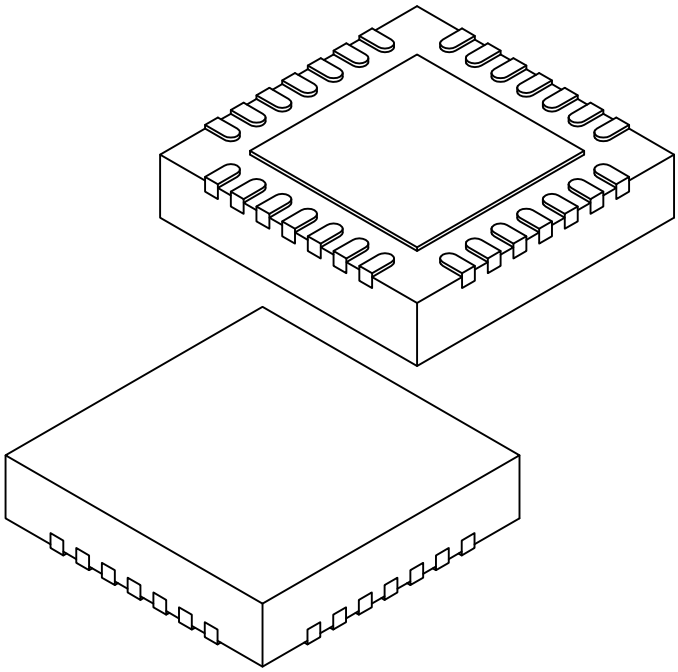

Units		MILLIMETERS		
Dimension Limits		MIN	NOM	MAX
Number of Terminals	N		28	
Pitch	e		0.40 BSC	
Overall Height	A	0.80	0.85	0.90
Standoff	A1	0.00	0.02	0.05
Terminal Thickness	A3		0.20 REF	
Overall Length	D		4.00 BSC	
Exposed Pad Length	D2	2.50	2.60	2.70
Overall Width	E		4.00 BSC	
Exposed Pad Width	E2	2.50	2.60	2.70
Terminal Width	b	0.17	0.20	0.25
Terminal Length	L	0.30	0.40	0.50
Terminal-to-Exposed-Pad	K	0.20	-	-

Notes:

1. Pin 1 visual index feature may vary, but must be located within the hatched area.
2. Package is saw singulated
3. Dimensioning and tolerancing per ASME Y14.5M

   BSC: Basic Dimension. Theoretically exact value shown without tolerances.

   REF: Reference Dimension, usually without tolerance, for information purposes only.

Microchip Technology Drawing C04-144 Rev B Sheet 2 of 2

© 2024 Microchip Technology Inc. and its subsidiaries

28-Lead Plastic Quad Flat, No Lead Package (MK) - 4x4 mm Body [QFN]

Note: For the most current package drawings, please see the Microchip Packaging Specification located at http://www.microchip.com/packaging

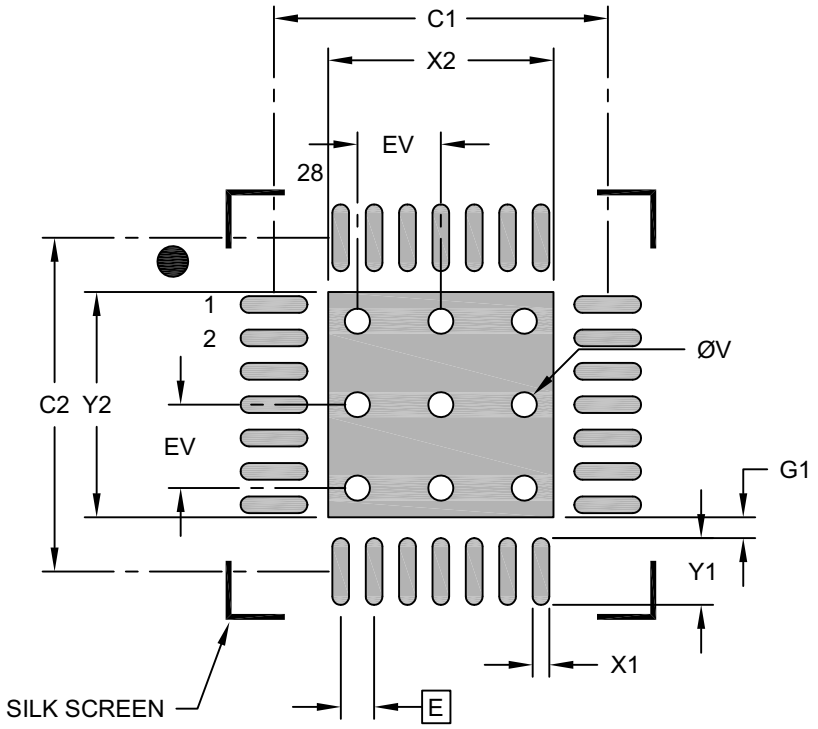

RECOMMENDED LAND PATTERN

Units		MILLIMETERS		
Dimension Limits		MIN	NOM	MAX
Contact Pitch	E		0.40 BSC	
Optional Center Pad Width	X2			2.70
Optional Center Pad Length	Y2			2.70
Contact Pad Spacing	C1		4.00	
Contact Pad Spacing	C2		4.00	
Contact Pad Width (X28)	X1			0.20
Contact Pad Length (X28)	Y1			0.80
Contact Pad to Center Pad (X24)	G1	0.20		
Thermal Via Diameter	V		0.30	
Thermal Via Pitch	EV		1.00	

Notes:

1. Dimensioning and tolerancing per ASME Y14.5M

   BSC: Basic Dimension. Theoretically exact value shown without tolerances.

2. For best soldering results, thermal vias, if used, should be filled or tented to avoid solder loss during reflow process

Microchip Technology Drawing C04-2144 Rev B

© 2024 Microchip Technology Inc. and its subsidiaries

NOTES:

© 2024 Microchip Technology Inc. and its subsidiaries

APPENDIX A: REVISION HISTORY

Revision A (May 2024)

- Initial Release of this Document.

NOTES:

© 2024 Microchip Technology Inc. and its subsidiaries

PRODUCT IDENTIFICATION SYSTEM

To order or obtain information, e.g., on pricing or delivery, refer to the factory or the listed sales office.

PART NO.	[T](1)	-X	X	/XXX
Device	Tape and Reel	Version	Temperature Range	Package

Device:	MCP22350	
Tape and Reel Option:	Blank T	= Standard packaging (Tray) = Tape and Reel (Note 1)
Version:	1 2	= No Dead Battery Support = With Dead Battery Support
Temperature Range:	I	= -40°C to +85°C (Industrial)
Package:	Q8X	= 28-pin VQFN

Examples:

a) MCP22350-1I/Q8X
No Dead Battery Support, Standard Packaging, -40°C to +85°C, 28-pin VQFN Package

b) MCP22350-2I/Q8X
With Dead Battery Support, Standard Packaging, -40°C to +85°C, 28-pin VQFN Package

c) MCP22350T-1I/Q8X
No Dead Battery Support, Tape and Reel, -40°C to +85°C, 28-pin VQFN Package

d) MCP22350T-2I/Q8X
With Dead Battery Support, Tape and Reel, -40°C to +85°C, 28-pin VQFN Package

Note 1: Tape and Reel identifier only appears in the catalog part number description. This identifier is used for ordering purposes and is not printed on the device package. Check with your Microchip Sales Office for package availability with the Tape and Reel option.

© 2024 Microchip Technology Inc. and its subsidiaries

NOTES:

© 2024 Microchip Technology Inc. and its subsidiaries

Note the following details of the code protection feature on Microchip products:

- Microchip products meet the specifications contained in their particular Microchip Data Sheet.
- Microchip believes that its family of products is secure when used in the intended manner, within operating specifications, and under normal conditions.
- Microchip values and aggressively protects its intellectual property rights. Attempts to breach the code protection features of Microchip product is strictly prohibited and may violate the Digital Millennium Copyright Act.
- Neither Microchip nor any other semiconductor manufacturer can guarantee the security of its code. Code protection does not mean that we are guaranteeing the product is "unbreakable" Code protection is constantly evolving. Microchip is committed to continuously improving the code protection features of our products.

This publication and the information herein may be used only with Microchip products, including to design, test, and integrate Microchip products with your application. Use of this information in any other manner violates these terms. Information regarding device applications is provided only for your convenience and may be superseded by updates. It is your responsibility to ensure that your application meets with your specifications. Contact your local Microchip sales office for additional support or, obtain additional support at https://www.microchip.com/en-us/support/design-help/client-support-services.

THIS INFORMATION IS PROVIDED BY MICROCHIP "AS IS". MICROCHIP MAKES NO REPRESENTATIONS OR WARRANTIES OF ANY KIND WHETHER EXPRESS OR IMPLIED, WRITTEN OR ORAL, STATUTORY OR OTHERWISE, RELATED TO THE INFORMATION INCLUDING BUT NOT LIMITED TO ANY IMPLIED WARRANTIES OF NON-INFRINGEMENT, MERCHANTABILITY, AND FITNESS FOR A PARTICULAR PURPOSE, OR WARRANTIES RELATED TO ITS CONDITION, QUALITY, OR PERFORMANCE.

IN NO EVENT WILL MICROCHIP BE LIABLE FOR ANY INDIRECT, SPECIAL, PUNITIVE, INCIDENTAL, OR CONSEQUENTIAL LOSS, DAMAGE, COST, OR EXPENSE OF ANY KIND WHATSOEVER RELATED TO THE INFORMATION OR ITS USE, HOWEVER CAUSED, EVEN IF MICROCHIP HAS BEEN ADVISED OF THE POSSIBILITY OR THE DAMAGES ARE FORESEEABLE. TO THE FULLEST EXTENT ALLOWED BY LAW, MICROCHIP'S TOTAL LIABILITY ON ALL CLAIMS IN ANY WAY RELATED TO THE INFORMATION OR ITS USE WILL NOT EXCEED THE AMOUNT OF FEES, IF ANY, THAT YOU HAVE PAID DIRECTLY TO MICROCHIP FOR THE INFORMATION.

Use of Microchip devices in life support and/or safety applications is entirely at the buyer's risk, and the buyer agrees to defend, indemnify and hold harmless Microchip from any and all damages, claims, suits, or expenses resulting from such use. No licenses are conveyed, implicitly or otherwise, under any Microchip intellectual property rights unless otherwise stated.

Trademarks

The Microchip name and logo, the Microchip logo, Adaptec, AVR, AVR logo, AVR Freaks, BesTime, BitCloud, CryptoMemory, CryptoRF, dsPIC, flexPWR, HELDO, IGLOO, JukeBlox, KeeLoq, Kleer, LANCheck, LinkMD, maXStylus, maXTouch, MediaLB, megaAVR, Microsemi, Microsemi logo, MOST, MOST logo, MPLAB, OptoLyzer, PIC, picoPower, PICSTART, PIC32 logo, PolarFire, Prochip Designer, QTouch, SAM-BA, SenGenuity, SpyNIC, SST, SST Logo, SuperFlash, Symmetricom, SyncServer, Tachyon, TimeSource, tinyAVR, UNI/O, Vectron, and XMEGA are registered trademarks of Microchip Technology Incorporated in the U.S.A. and other countries.

AgileSwitch, ClockWorks, The Embedded Control Solutions Company, EtherSynch, Flashtec, Hyper Speed Control, HyperLight Load, Libero, motorBench, mTouch, Powermite 3, Precision Edge, ProASIC, ProASIC Plus, ProASIC Plus logo, Quiet-Wire, SmartFusion, SyncWorld, TimeCesium, TimeHub, TimePictra, TimeProvider, and ZL are registered trademarks of Microchip Technology Incorporated in the U.S.A.

Adjacent Key Suppression, AKS, Analog-for-the-Digital Age, Any Capacitor, AnyIn, AnyOut, Augmented Switching, BlueSky, BodyCom, Clockstudio, CodeGuard, CryptoAuthentication, CryptoAutomotive, CryptoCompanion, CryptoController, dsPICDEM, dsPICDEM.net, Dynamic Average Matching, DAM, ECAN, Espresso T1S, EtherGREEN, EyeOpen, GridTime, IdealBridge, IGaT, In-Circuit Serial Programming, ICSP, INICnet, Intelligent Paralleling, IntelliMOS, Inter-Chip Connectivity, JitterBlocker, Knob-on-Display, MarginLink, maxCrypto, maxView, memBrain, Mindi, MiWi, MPASM, MPF, MPLAB Certified logo, MPLIB, MPLINK, mSiC, MultiTRAK, NetDetach, Omniscient Code Generation, PICDEM, PICDEM.net, PICkit, PICtail, Power MOS IV, Power MOS 7, PowerSmart, PureSilicon, QMatrix, REAL ICE, Ripple Blocker, RTAX, RTG4, SAM-ICE, Serial Quad I/O, simpleMAP, SimpliPHY, SmartBuffer, SmartHLS, SMART-I.S., storClad, SQI, SuperSwitcher, SuperSwitcher II, Switchtec, SynchroPHY, Total Endurance, Trusted Time, TSHARC, Turing, USBCheck, VariSense, VectorBlox, VeriPHY, ViewSpan, WiperLock, XpressConnect, and ZENA are trademarks of Microchip Technology Incorporated in the U.S.A. and other countries.

SQTP is a service mark of Microchip Technology Incorporated in the U.S.A.

The Adaptec logo, Frequency on Demand, Silicon Storage Technology, and Symmcom are registered trademarks of Microchip Technology Inc. in other countries.

GestIC is a registered trademark of Microchip Technology Germany II GmbH & Co. KG, a subsidiary of Microchip Technology Inc., in other countries.

All other trademarks mentioned herein are property of their respective companies.
© 2024, Microchip Technology Incorporated and its subsidiaries.

All Rights Reserved.

ISBN: 978-1-6683-4102-5

For information regarding Microchip's Quality Management Systems, please visit www.microchip.com/quality.

Worldwide Sales and Service

AMERICAS

Corporate Office
2355 West Chandler Blvd.
Chandler, AZ 85224-6199
Tel: 480-792-7200
Fax: 480-792-7277
Technical Support:
http://www.microchip.com/support
Web Address:
www.microchip.com

Atlanta
Duluth, GA
Tel: 678-957-9614
Fax: 678-957-1455

Austin, TX
Tel: 512-257-3370

Boston
Westborough, MA
Tel: 774-760-0087
Fax: 774-760-0088

Chicago
Itasca, IL
Tel: 630-285-0071
Fax: 630-285-0075

Dallas
Addison, TX
Tel: 972-818-7423
Fax: 972-818-2924

Detroit
Novi, MI
Tel: 248-848-4000

Houston, TX
Tel: 281-894-5983

Indianapolis
Noblesville, IN
Tel: 317-773-8323
Fax: 317-773-5453
Tel: 317-536-2380

Los Angeles
Mission Viejo, CA
Tel: 949-462-9523
Fax: 949-462-9608
Tel: 951-273-7800

Raleigh, NC
Tel: 919-844-7510

New York, NY
Tel: 631-435-6000

San Jose, CA
Tel: 408-735-9110
Tel: 408-436-4270

Canada - Toronto
Tel: 905-695-1980
Fax: 905-695-2078

ASIA/PACIFIC

Australia - Sydney
Tel: 61-2-9868-6733

China - Beijing
Tel: 86-10-8569-7000

China - Chengdu
Tel: 86-28-8665-5511

China - Chongqing
Tel: 86-23-8980-9588

China - Dongguan
Tel: 86-769-8702-9880

China - Guangzhou
Tel: 86-20-8755-8029

China - Hangzhou
Tel: 86-571-8792-8115

China - Hong Kong SAR
Tel: 852-2943-5100

China - Nanjing
Tel: 86-25-8473-2460

China - Qingdao
Tel: 86-532-8502-7355

China - Shanghai
Tel: 86-21-3326-8000

China - Shenyang
Tel: 86-24-2334-2829

China - Shenzhen
Tel: 86-755-8864-2200

China - Suzhou
Tel: 86-186-6233-1526

China - Wuhan
Tel: 86-27-5980-5300

China - Xian
Tel: 86-29-8833-7252

China - Xiamen
Tel: 86-592-2388138

China - Zhuhai
Tel: 86-756-3210040

ASIA/PACIFIC

India - Bangalore
Tel: 91-80-3090-4444

India - New Delhi
Tel: 91-11-4160-8631

India - Pune
Tel: 91-20-4121-0141

Japan - Osaka
Tel: 81-6-6152-7160

Japan - Tokyo
Tel: 81-3-6880- 3770

Korea - Daegu
Tel: 82-53-744-4301

Korea - Seoul
Tel: 82-2-554-7200

Malaysia - Kuala Lumpur
Tel: 60-3-7651-7906

Malaysia - Penang
Tel: 60-4-227-8870

Philippines - Manila
Tel: 63-2-634-9065

Singapore
Tel: 65-6334-8870

Taiwan - Hsin Chu
Tel: 886-3-577-8366

Taiwan - Kaohsiung
Tel: 886-7-213-7830

Taiwan - Taipei
Tel: 886-2-2508-8600

Thailand - Bangkok
Tel: 66-2-694-1351

Vietnam - Ho Chi Minh
Tel: 84-28-5448-2100

EUROPE

Austria - Wels
Tel: 43-7242-2244-39
Fax: 43-7242-2244-393

Denmark - Copenhagen
Tel: 45-4485-5910
Fax: 45-4485-2829

Finland - Espoo
Tel: 358-9-4520-820

France - Paris
Tel: 33-1-69-53-63-20
Fax: 33-1-69-30-90-79

Germany - Garching
Tel: 49-8931-9700

Germany - Haan
Tel: 49-2129-3766400

Germany - Heilbronn
Tel: 49-7131-72400

Germany - Karlsruhe
Tel: 49-721-625370

Germany - Munich
Tel: 49-89-627-144-0
Fax: 49-89-627-144-44

Germany - Rosenheim
Tel: 49-8031-354-560

Israel - Hod Hasharon
Tel: 972-9-775-5100

Italy - Milan
Tel: 39-0331-742611
Fax: 39-0331-466781

Italy - Padova
Tel: 39-049-7625286

Netherlands - Drunen
Tel: 31-416-690399
Fax: 31-416-690340

Norway - Trondheim
Tel: 47-7288-4388

Poland - Warsaw
Tel: 48-22-3325737

Romania - Bucharest
Tel: 40-21-407-87-50

Spain - Madrid
Tel: 34-91-708-08-90
Fax: 34-91-708-08-91

Sweden - Gothenberg
Tel: 46-31-704-60-40

Sweden - Stockholm
Tel: 46-8-5090-4654

UK - Wokingham
Tel: 44-118-921-5800
Fax: 44-118-921-5820

© 2024 Microchip Technology Inc. and its subsidiaries