MIC5891

8-Bit Serial-Input Latched Source Driver

Features

- High-Voltage, High-Current Outputs
- Output Transient Protection Diodes
- CMOS-, PMOS-, NMOS-, and TTL-Compatible Inputs
- 5 MHz Typical Data Input Rate
- Low-Power CMOS Latches

Applications

- Alphanumeric and Bar Graph Displays
- LED and Incandescent Displays
- Relay and Solenoid Drivers
- Other High-Power Loads

Package Type

MIC5891
16-PIN PDIP OR SOICW

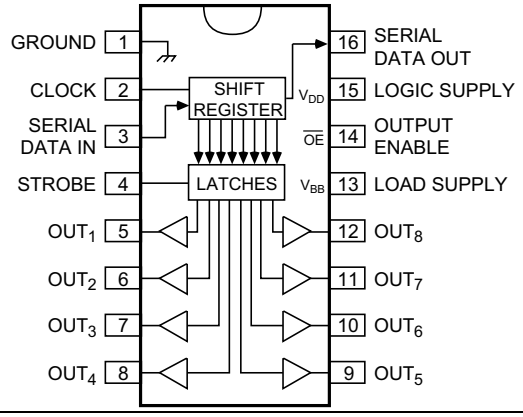

General Description

The MIC5891 latched driver is a high-voltage, high-current integrated circuit comprised of eight CMOS data latches, CMOS control circuitry for the common STROBE and OUTPUT ENABLE, and bipolar Darlington transistor drivers for each latch.

Bipolar/MOS construction provides extremely low power latches with maximum interface flexibility.

The MIC5891 will typically operate at 5 MHz with a 5V logic supply.

The CMOS inputs are compatible with standard CMOS, PMOS, and NMOS logic levels. TTL circuits may be used with appropriate pull-up resistors to ensure a proper logic-high input.

A CMOS serial data output allows additional drivers to be cascaded when more than 8 bits are required.

The MIC5891 has open-emitter outputs with suppression diodes for protection against inductive load transients. The output transistors are capable of sourcing 500 mA and will sustain at least 35V in the on-state.

Simultaneous operation of all drivers at maximum rated current requires a reduction in duty cycle due to package power limitations. Outputs may be paralleled for higher load current capability.

The MIC5891 is available in a 16-pin plastic DIP package (N) and 16-pin wide SOIC package (WM).

© 2016 Microchip Technology Inc.

Functional Diagram

MIC5891
16-PIN PDIP OR SOICW

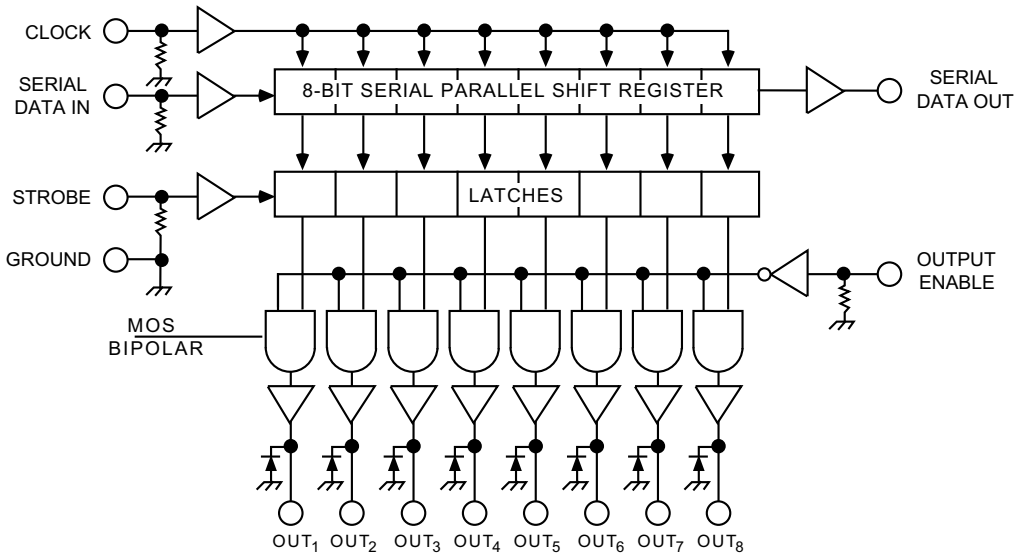

© 2016 Microchip Technology Inc.

1.0 ELECTRICAL CHARACTERISTICS

Absolute Maximum Ratings † (Note 1, Note 2, Note 3)

Output Voltage (V_{OUT}) ..... +50V
Logic Supply Voltage Range (V_{DD}) ..... +4.5V to +15V
Load Supply Voltage Range (V_{BB}) ..... +5.0V to +50V
Input Voltage Range (V_{IN}) ..... –0.3V to (V_{DD} + 0.3V)
Continuous Collector Current (I_C) ..... 500 mA
Package Power Dissipation ..... See Figure 2-1

† **Notice:** Stresses above those listed under "Absolute Maximum Ratings" may cause permanent damage to the device. This is a stress rating only and functional operation of the device at those or any other conditions above those indicated in the operational sections of this specification is not intended. Exposure to maximum rating conditions for extended periods may affect device reliability.

Note 1: T_A = +25°C.

2: Derate at the rate of 20 mW/°C above T_A = +25°C.

3: Microchip CMOS devices have input-static protection, but are susceptible to damage when exposed to extremely high static electrical charges.

TABLE 1-1: ALLOWABLE DUTY CYCLES

Number of Outputs ON at I_{OUT} = –200 mA	Maximum Allowable Duty Cycles at a T_A of:		
	+50°C	+60°C	+70°C
8	53%	47%	41%
7	60%	54%	48%
6	70%	64%	56%
5	83%	75%	67%
4	100%	94%	84%
3	100%	100%	100%
2	100%	100%	100%
1	100%	100%	100%

© 2016 Microchip Technology Inc.

TABLE 1-2: ELECTRICAL CHARACTERISTICS

Electrical Characteristics: V_{BB} = 50V, V_{DD} = 5V to 12V; T_A = 25°C, unless noted. **(Note 1)**.						
Parameters	**Sym.**	**Min.**	**Typ.**	**Max.**	**Units**	**Conditions**
Output Leakage Current	I_{CEX}	—	—	–50	µA	T_A = +25°C
		—	—	–100	µA	T_A = +85°C
Output Saturation Voltage	$V_{CE(SAT)}$	—	—	2.3	V	I_{OUT} = –100 mA, T_A = +85°C
		—	—	2.4	V	I_{OUT} = –225 mA, T_A = +85°C
		—	—	2.5	V	I_{OUT} = –350 mA, T_A = +85°C
Output Sustaining Voltage	$V_{CE(SUS)}$	35	—	—	V	I_{OUT} = –350 mA, L = 2 mH
Input Voltage	$V_{IN(1)}$ $V_{IN(0)}$	3.5	—	V_{DD}+0.3	V	V_{DD} = 5.0V
		10.5	—	V_{DD}+0.3	V	V_{DD} = 12V
		V_{SS}–0.3	—	0.8	V	V_{DD} = 5.0V to 12V
Input Current	$I_{IN(1)}$	—	—	120	µA	V_{DD} = V_{IN} = 5.0V
		—	—	240	µA	V_{DD} = 12V
Input Impedance	Z_{IN}	100	—	—	kΩ	V_{DD} = 5.0V
		50	—	—	kΩ	V_{DD} = 12V
Maximum Clock Frequency	f_c	3.3	—	—	MHz	—
Serial Data Output Resistance	R_{OUT}	—	—	20	kΩ	V_{DD} = 5.0V
		—	—	6.0	kΩ	V_{DD} = 12V
Turn-On Delay	t_{PLH}	—	—	2.0	µs	Output Enable to Output, I_{OUT} = –350 mA
Turn-Off Delay	t_{PHL}	—	—	10	µs	Output Enable to Output, I_{OUT} = –350 mA
Supply Current	I_{BB}	—	—	10	mA	All outputs on, all outputs open
		—	—	200	µA	All outputs off
	I_{DD}	—	—	100	µA	V_{DD} = 5V, all outputs off, inputs = 0V
		—	—	200	µA	V_{DD} = 12V, all outputs off, inputs = 0V
		—	—	1.0	mA	V_{DD} = 5V, one output on, inputs = 0V
		—	—	3.0	mA	V_{DD} = 12V, one output on, inputs = 0V
Diode Leakage Current	I_H	—	—	50	µA	T_A = +25°C; Max. V_{BB}
		—	—	100	µA	T_A = +85°C; Max. V_{BB}
Diode Forward Voltage	V_F	—	—	2.0	V	I_F = 350 mA; V_{BB} open

Note 1: Specification for packaged product only.

2: Positive (negative) current is defined as going into (coming out of) the specified device pin.

3: Operation of these devices with standard TTL may require the use of appropriate pull-up resistors.

© 2016 Microchip Technology Inc.

TEMPERATURE SPECIFICATIONS

Parameters	Sym.	Min.	Typ.	Max.	Units	Conditions
Temperature Ranges						
Operating Temperature Range	T_A	–40	—	+85	°C	Note 1
Storage Temperature Range	T_S	–65	—	+150	°C	—

Note 1: The maximum allowable power dissipation is a function of ambient temperature, the maximum allowable junction temperature and the thermal resistance from junction to air (i.e., T_A, T_J, θ_{JA}). Exceeding the maximum allowable power dissipation will cause the device operating junction temperature to exceed the maximum +125°C rating. Sustained junction temperatures above +125°C can impact the device reliability.

Typical Circuits

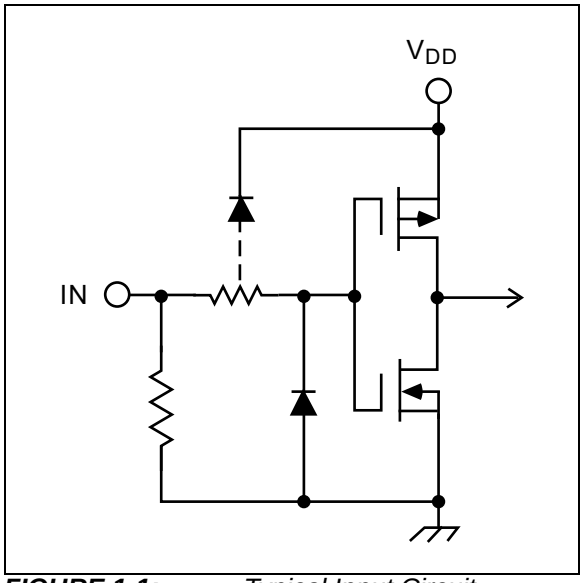

FIGURE 1-1: *Typical Input Circuit*

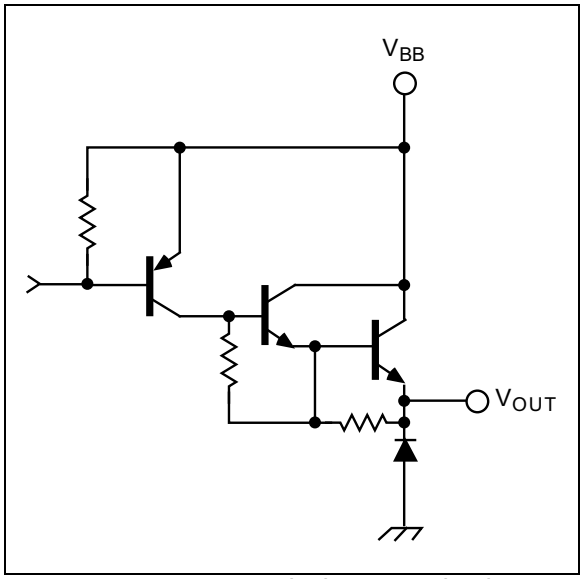

FIGURE 1-2: *Typical Output Circuit.*

2.0 TYPICAL PERFORMANCE CURVES

Note:	The graphs and tables provided following this note are a statistical summary based on a limited number of samples and are provided for informational purposes only. The performance characteristics listed herein are not tested or guaranteed. In some graphs or tables, the data presented may be outside the specified operating range (e.g., outside specified power supply range) and therefore outside the warranted range.

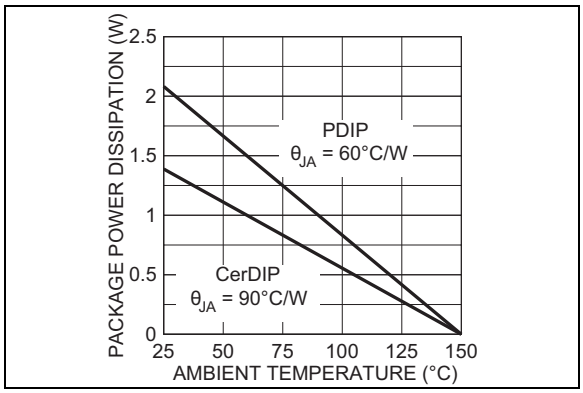

FIGURE 2-1: *Allowable Package Power Dissipation vs. Temperature.*

© 2016 Microchip Technology Inc.

3.0 TIMING CONDITIONS

The descriptions of the timing conditions are listed below Figure 3-1.

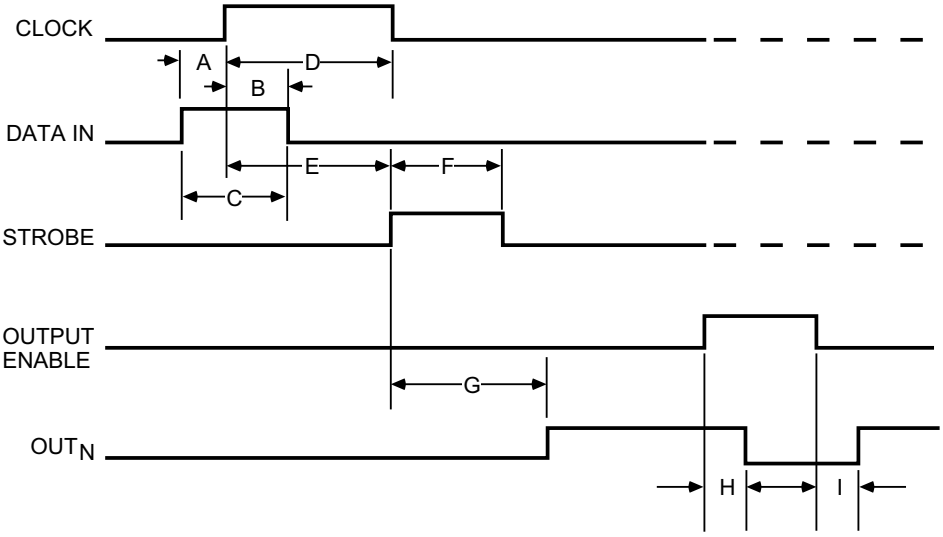

FIGURE 3-1: *Timing Conditions.*

TABLE 3-1: TIMING CONDITIONS PARAMETERS

V_{DD} = 5.0V, Logic levels are V_{DD} and ground.		
Reference	**Parameter**	**Value**
A	Minimum data active time before clock pulse (data set-up time)	75 ns
B	Minimum data active time after clock pulse (data hold time)	75 ns
C	Minimum data pulse width	150 ns
D	Minimum clock pulse width	150 ns
E	Minimum time between clock activation and strobe	300 ns
F	Minimum strobe pulse width	100 ns
G	Typical time between strobe activation and output transition	1.0 µs
H	Turn-off delay	See Electrical Characteristics
I	Turn-on delay	See Electrical Characteristics

TABLE 3-2: TRUTH TABLE

Serial Data Input	**Clock Input**	**Shift Register Contents**	**Serial Data Output**	**Strobe Input**	**Latch Contents**	**Output Enable**	**Output Content**
		I_1 I_2 I_3 ... I_{N-1} I_N			**I_1 I_2 I_3 ... I_{N-1} I_N**		**I_1 I_2 I_3 ... I_{N-1} I_N**
H	⎍	H R_1 R_2 ... R_{N-2} R_{N-1}	R_{N-1}	—	—	—	—
L	⎍	L R_1 R_2 ... R_{N-2} R_{N-1}	R_{N-1}				
X	⎎	R_1 R_2 R_3 ... R_{N-1} R_N	R_N				
—	—	X X X ... X X	X	L	R_1 R_2 R_3 ... R_{N-1} R_N		
		P_1 P_2 P_3 ... P_{N-1} P_N	P_N	H	P_1 P_2 P_3 ... P_{N-1} P_N	L	P_1 P_2 P_3 ... P_{N-1} P_N
		—	—	—	X X X ... X X	H	L L L ... L L

L = Low Logic Level, H = High Logic Level, X = Irrelevant, P = Present State, R = Previous State.

4.0 APPLICATION INFORMATION

Serial data present at the input is transferred into the shift register on the rising edge of the CLOCK input pulse. Additional CLOCK pulses shift data information towards the SERIAL DATA OUTPUT. The serial data must appear at the input prior to the rising edge of the CLOCK input waveform.

The 8 bits present in the shift register are transferred to the respective latches when the STROBE is high (serial-to-parallel conversion). The latches will continue to accept new data as long as the STROBE is held high. Most applications where the latching feature is not used (STROBE tied high) require the OUTPUT ENABLE input to be high during serial data entry.

Outputs are active (controlled by the latch state) when the OUTPUT ENABLE is low. All outputs are low (disabled) when the OUTPUT ENABLE is high. OUTPUT ENABLE does not affect the data in the shift register or latch.

© 2016 Microchip Technology Inc.

5.0 PACKAGING INFORMATION

5.1 Package Marking Information

16-Pin PDIP*

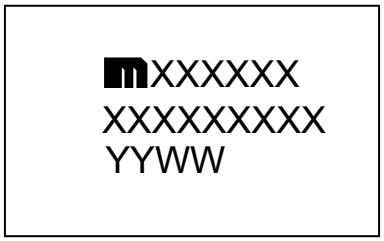

Example

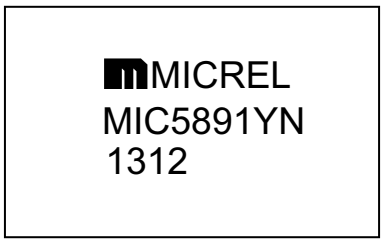

16-Pin SOICW*

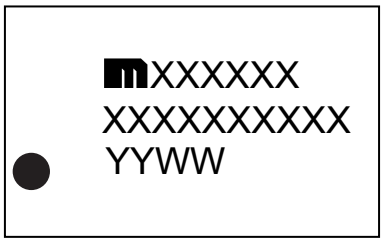

Example

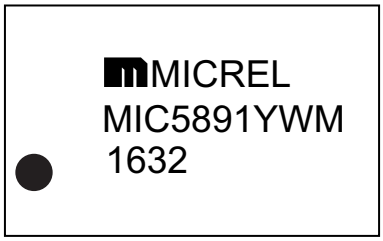

Legend:	XX...X	Product code or customer-specific information
	Y	Year code (last digit of calendar year)
	YY	Year code (last 2 digits of calendar year)
	WW	Week code (week of January 1 is week '01')
	NNN	Alphanumeric traceability code
	(e3)	Pb-free JEDEC® designator for Matte Tin (Sn)
	*	This package is Pb-free. The Pb-free JEDEC designator ((e3)) can be found on the outer packaging for this package.
	●, ▲, ▼	Pin one index is identified by a dot, delta up, or delta down (triangle mark).

Note: In the event the full Microchip part number cannot be marked on one line, it will be carried over to the next line, thus limiting the number of available characters for customer-specific information. Package may or may not include the corporate logo.

Underbar (_) and/or Overbar (¯) symbol may not be to scale.

16-Lead PDIP Package Outline and Recommended Land Pattern

TITLE
16 LEAD PDIP PACKAGE OUTLINE & RECOMMENDED LAND PATTERN

DRAWING #	PDIP-16LD-PL-1	**UNIT**	INCH
LEAD FRAME	Copper	**LEAD FINISH**	Matte Tin

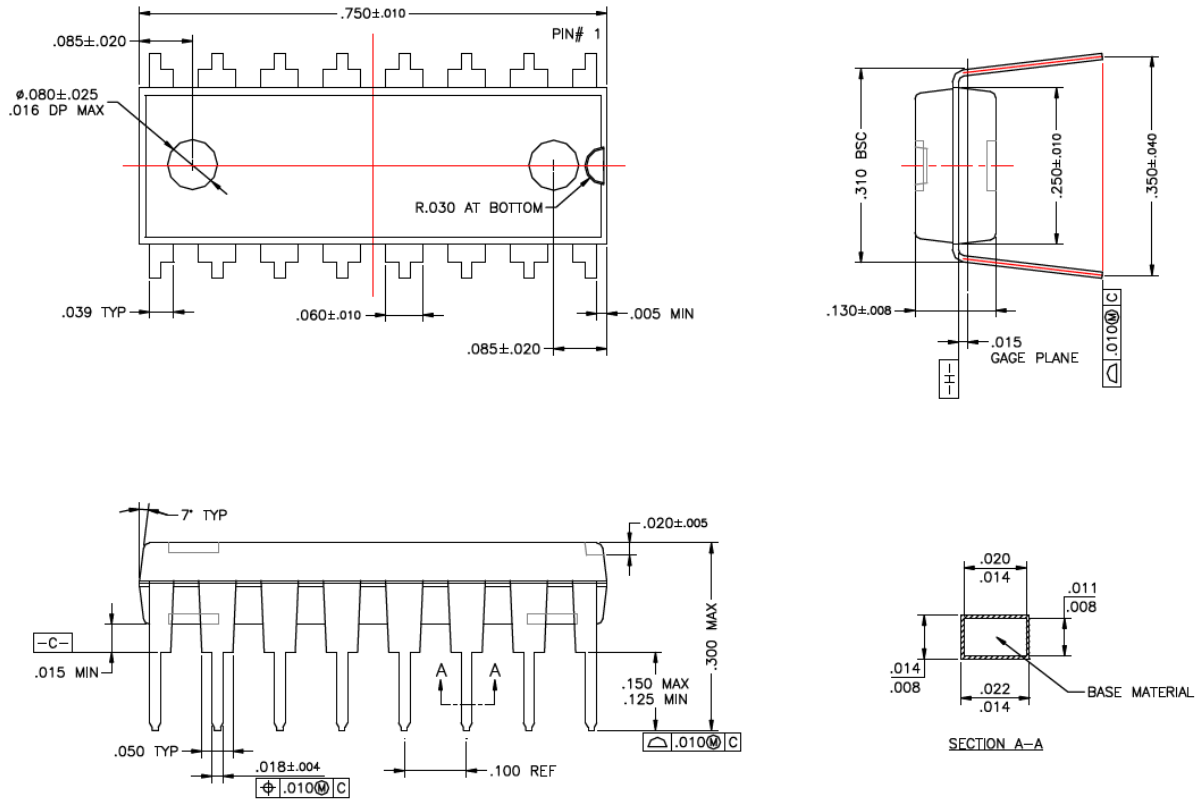

Note: For the most current package drawings, please see the Microchip Packaging Specification located at http://www.microchip.com/packaging.

© 2016 Microchip Technology Inc.

16-Lead SOICW Package Outline and Recommended Land Pattern

TITLE
16 LEAD SOICW PACKAGE OUTLINE & RECOMMENDED LAND PATTERN

DRAWING #	SOICW-16LD-PL-1	UNIT	INCH [MM]

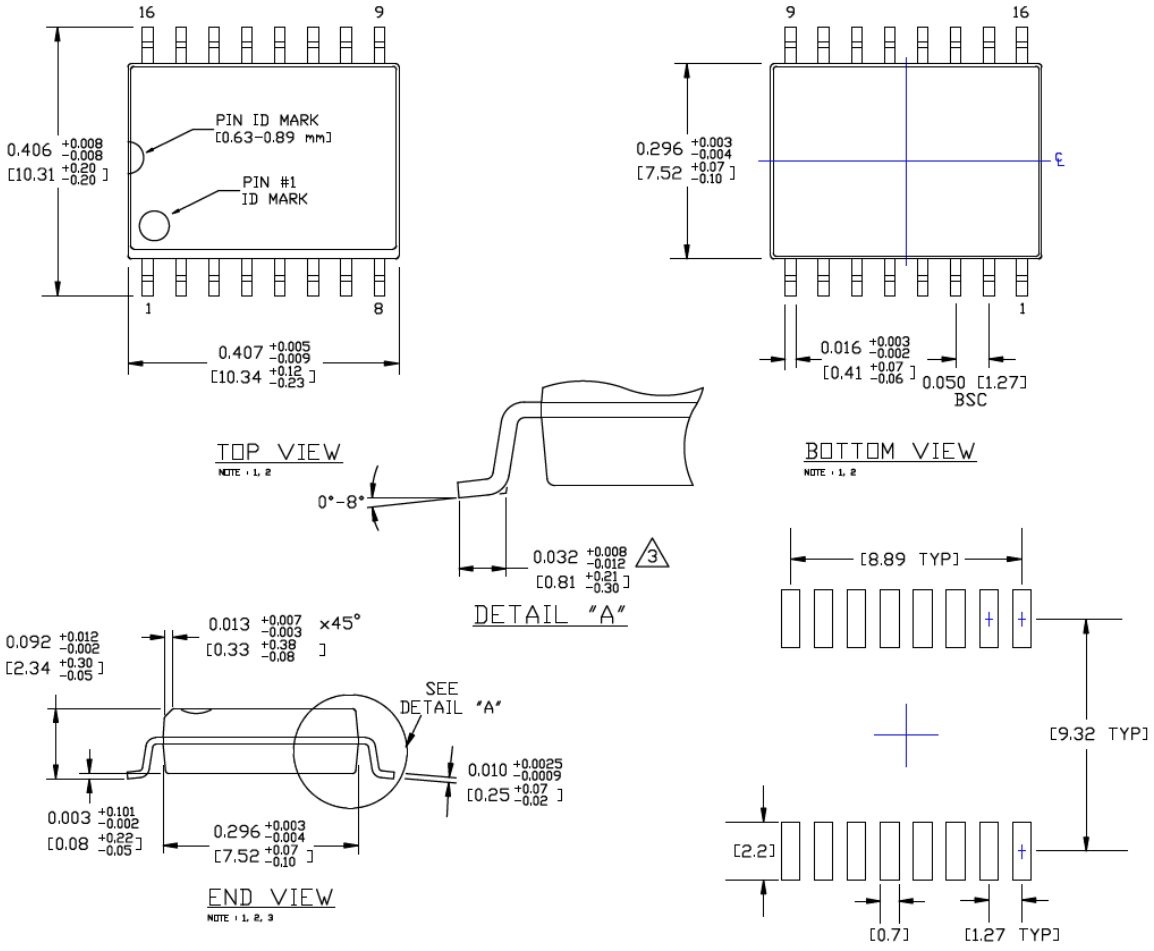

NOTES:
1. DIMENSIONS ARE IN INCHES[MM].
2. CONTROLLING DIMENSION: INCHES.
3. DIMENSION DOES NOT INCLUDE MOLD FLASH OR PROTRUSIONS, EITHER OF WHICH SHALL NOT EXCEED 0.006[0.15] PER SIDE.

Note: For the most current package drawings, please see the Microchip Packaging Specification located at http://www.microchip.com/packaging.

NOTES:

© 2016 Microchip Technology Inc.

APPENDIX A: REVISION HISTORY

Revision A (October 2016)

- Converted Micrel document MIC5891 to Microchip data sheet DS20005638A.
- Minor text changes throughout.
- Operating temperature range corrected in the Temperature Specifications section.
- Maximum Saturation Voltage values updated in Table 1-2.
- First Input Current maximum value updated in Table 1-2.

NOTES:

© 2016 Microchip Technology Inc.

PRODUCT IDENTIFICATION SYSTEM

To order or obtain information, e.g., on pricing or delivery, contact your local Microchip representative or sales office.

PART NO.	X	XX	–	X.X
Device	Junction Temperature Range	Package		Media Type

Device:	MIC5891:	8-Bit Serial-Input Latched Source Driver
Junction Temperature Range:	Y =	–40°C to +85°C
Package:	N =	16-Lead PDIP
	WM =	16-Lead SOICW
Media Type:	TR =	1,000/Reel for WM Package
	(blank)=	25/Tube for N Package
	(blank)=	47/Tube for WM Package

Examples:

a) MIC5891YN: 8-Bit Serial-Input Latched Source Driver, –40°C to +85°C Junction Temperature Range, 16-Lead PDIP, 25/Tube

a) MIC5891YWM: 8-Bit Serial-Input Latched Source Driver, –40°C to +85°C Junction Temperature Range, 16-Lead SOICW, 47/Tube

a) MIC5891YWM-TR: 8-Bit Serial-Input Latched Source Driver, –40°C to +85°C Junction Temperature Range, 16-Lead SOICW, 1,000/Reel

NOTES:

© 2016 Microchip Technology Inc.

Note the following details of the code protection feature on Microchip devices:

- Microchip products meet the specification contained in their particular Microchip Data Sheet.
- Microchip believes that its family of products is one of the most secure families of its kind on the market today, when used in the intended manner and under normal conditions.
- There are dishonest and possibly illegal methods used to breach the code protection feature. All of these methods, to our knowledge, require using the Microchip products in a manner outside the operating specifications contained in Microchip's Data Sheets. Most likely, the person doing so is engaged in theft of intellectual property.
- Microchip is willing to work with the customer who is concerned about the integrity of their code.
- Neither Microchip nor any other semiconductor manufacturer can guarantee the security of their code. Code protection does not mean that we are guaranteeing the product as "unbreakable."

Code protection is constantly evolving. We at Microchip are committed to continuously improving the code protection features of our products. Attempts to break Microchip's code protection feature may be a violation of the Digital Millennium Copyright Act. If such acts allow unauthorized access to your software or other copyrighted work, you may have a right to sue for relief under that Act.

Information contained in this publication regarding device applications and the like is provided only for your convenience and may be superseded by updates. It is your responsibility to ensure that your application meets with your specifications. MICROCHIP MAKES NO REPRESENTATIONS OR WARRANTIES OF ANY KIND WHETHER EXPRESS OR IMPLIED, WRITTEN OR ORAL, STATUTORY OR OTHERWISE, RELATED TO THE INFORMATION, INCLUDING BUT NOT LIMITED TO ITS CONDITION, QUALITY, PERFORMANCE, MERCHANTABILITY OR FITNESS FOR PURPOSE**.** Microchip disclaims all liability arising from this information and its use. Use of Microchip devices in life support and/or safety applications is entirely at the buyer's risk, and the buyer agrees to defend, indemnify and hold harmless Microchip from any and all damages, claims, suits, or expenses resulting from such use. No licenses are conveyed, implicitly or otherwise, under any Microchip intellectual property rights unless otherwise stated.

Microchip received ISO/TS-16949:2009 certification for its worldwide headquarters, design and wafer fabrication facilities in Chandler and Tempe, Arizona; Gresham, Oregon and design centers in California and India. The Company's quality system processes and procedures are for its PIC® MCUs and dsPIC® DSCs, KEELOQ® code hopping devices, Serial EEPROMs, microperipherals, nonvolatile memory and analog products. In addition, Microchip's quality system for the design and manufacture of development systems is ISO 9001:2000 certified.

QUALITY MANAGEMENT SYSTEM
CERTIFIED BY DNV
═ ISO/TS 16949 ═

Trademarks

The Microchip name and logo, the Microchip logo, AnyRate, dsPIC, FlashFlex, flexPWR, Heldo, JukeBlox, KeeLoq, KeeLoq logo, Kleer, LANCheck, LINK MD, MediaLB, MOST, MOST logo, MPLAB, OptoLyzer, PIC, PICSTART, PIC32 logo, RightTouch, SpyNIC, SST, SST Logo, SuperFlash and UNI/O are registered trademarks of Microchip Technology Incorporated in the U.S.A. and other countries.

ClockWorks, The Embedded Control Solutions Company, ETHERSYNCH, Hyper Speed Control, HyperLight Load, IntelliMOS, mTouch, Precision Edge, and QUIET-WIRE are registered trademarks of Microchip Technology Incorporated in the U.S.A.

Analog-for-the-Digital Age, Any Capacitor, AnyIn, AnyOut, BodyCom, chipKIT, chipKIT logo, CodeGuard, dsPICDEM, dsPICDEM.net, Dynamic Average Matching, DAM, ECAN, EtherGREEN, In-Circuit Serial Programming, ICSP, Inter-Chip Connectivity, JitterBlocker, KleerNet, KleerNet logo, MiWi, motorBench, MPASM, MPF, MPLAB Certified logo, MPLIB, MPLINK, MultiTRAK, NetDetach, Omniscient Code Generation, PICDEM, PICDEM.net, PICkit, PICtail, PureSilicon, RightTouch logo, REAL ICE, Ripple Blocker, Serial Quad I/O, SQI, SuperSwitcher, SuperSwitcher II, Total Endurance, TSHARC, USBCheck, VariSense, ViewSpan, WiperLock, Wireless DNA, and ZENA are trademarks of Microchip Technology Incorporated in the U.S.A. and other countries.

SQTP is a service mark of Microchip Technology Incorporated in the U.S.A.

Silicon Storage Technology is a registered trademark of Microchip Technology Inc. in other countries.

GestIC is a registered trademarks of Microchip Technology Germany II GmbH & Co. KG, a subsidiary of Microchip Technology Inc., in other countries.

All other trademarks mentioned herein are property of their respective companies.

© 2016, Microchip Technology Incorporated, Printed in the U.S.A., All Rights Reserved.

ISBN: 978-1-5224-1034-8

Worldwide Sales and Service

AMERICAS

Corporate Office
2355 West Chandler Blvd.
Chandler, AZ 85224-6199
Tel: 480-792-7200
Fax: 480-792-7277
Technical Support:
http://www.microchip.com/support
Web Address:
www.microchip.com

Atlanta
Duluth, GA
Tel: 678-957-9614
Fax: 678-957-1455

Austin, TX
Tel: 512-257-3370

Boston
Westborough, MA
Tel: 774-760-0087
Fax: 774-760-0088

Chicago
Itasca, IL
Tel: 630-285-0071
Fax: 630-285-0075

Cleveland
Independence, OH
Tel: 216-447-0464
Fax: 216-447-0643

Dallas
Addison, TX
Tel: 972-818-7423
Fax: 972-818-2924

Detroit
Novi, MI
Tel: 248-848-4000

Houston, TX
Tel: 281-894-5983

Indianapolis
Noblesville, IN
Tel: 317-773-8323
Fax: 317-773-5453

Los Angeles
Mission Viejo, CA
Tel: 949-462-9523
Fax: 949-462-9608

New York, NY
Tel: 631-435-6000

San Jose, CA
Tel: 408-735-9110

Canada - Toronto
Tel: 905-695-1980
Fax: 905-695-2078

ASIA/PACIFIC

Asia Pacific Office
Suites 3707-14, 37th Floor
Tower 6, The Gateway
Harbour City, Kowloon

Hong Kong
Tel: 852-2943-5100
Fax: 852-2401-3431

Australia - Sydney
Tel: 61-2-9868-6733
Fax: 61-2-9868-6755

China - Beijing
Tel: 86-10-8569-7000
Fax: 86-10-8528-2104

China - Chengdu
Tel: 86-28-8665-5511
Fax: 86-28-8665-7889

China - Chongqing
Tel: 86-23-8980-9588
Fax: 86-23-8980-9500

China - Dongguan
Tel: 86-769-8702-9880

China - Guangzhou
Tel: 86-20-8755-8029

China - Hangzhou
Tel: 86-571-8792-8115
Fax: 86-571-8792-8116

China - Hong Kong SAR
Tel: 852-2943-5100
Fax: 852-2401-3431

China - Nanjing
Tel: 86-25-8473-2460
Fax: 86-25-8473-2470

China - Qingdao
Tel: 86-532-8502-7355
Fax: 86-532-8502-7205

China - Shanghai
Tel: 86-21-5407-5533
Fax: 86-21-5407-5066

China - Shenyang
Tel: 86-24-2334-2829
Fax: 86-24-2334-2393

China - Shenzhen
Tel: 86-755-8864-2200
Fax: 86-755-8203-1760

China - Wuhan
Tel: 86-27-5980-5300
Fax: 86-27-5980-5118

China - Xian
Tel: 86-29-8833-7252
Fax: 86-29-8833-7256

ASIA/PACIFIC

China - Xiamen
Tel: 86-592-2388138
Fax: 86-592-2388130

China - Zhuhai
Tel: 86-756-3210040
Fax: 86-756-3210049

India - Bangalore
Tel: 91-80-3090-4444
Fax: 91-80-3090-4123

India - New Delhi
Tel: 91-11-4160-8631
Fax: 91-11-4160-8632

India - Pune
Tel: 91-20-3019-1500

Japan - Osaka
Tel: 81-6-6152-7160
Fax: 81-6-6152-9310

Japan - Tokyo
Tel: 81-3-6880- 3770
Fax: 81-3-6880-3771

Korea - Daegu
Tel: 82-53-744-4301
Fax: 82-53-744-4302

Korea - Seoul
Tel: 82-2-554-7200
Fax: 82-2-558-5932 or
82-2-558-5934

Malaysia - Kuala Lumpur
Tel: 60-3-6201-9857
Fax: 60-3-6201-9859

Malaysia - Penang
Tel: 60-4-227-8870
Fax: 60-4-227-4068

Philippines - Manila
Tel: 63-2-634-9065
Fax: 63-2-634-9069

Singapore
Tel: 65-6334-8870
Fax: 65-6334-8850

Taiwan - Hsin Chu
Tel: 886-3-5778-366
Fax: 886-3-5770-955

Taiwan - Kaohsiung
Tel: 886-7-213-7828

Taiwan - Taipei
Tel: 886-2-2508-8600
Fax: 886-2-2508-0102

Thailand - Bangkok
Tel: 66-2-694-1351
Fax: 66-2-694-1350

EUROPE

Austria - Wels
Tel: 43-7242-2244-39
Fax: 43-7242-2244-393

Denmark - Copenhagen
Tel: 45-4450-2828
Fax: 45-4485-2829

France - Paris
Tel: 33-1-69-53-63-20
Fax: 33-1-69-30-90-79

Germany - Dusseldorf
Tel: 49-2129-3766400

Germany - Karlsruhe
Tel: 49-721-625370

Germany - Munich
Tel: 49-89-627-144-0
Fax: 49-89-627-144-44

Italy - Milan
Tel: 39-0331-742611
Fax: 39-0331-466781

Italy - Venice
Tel: 39-049-7625286

Netherlands - Drunen
Tel: 31-416-690399
Fax: 31-416-690340

Poland - Warsaw
Tel: 48-22-3325737

Spain - Madrid
Tel: 34-91-708-08-90
Fax: 34-91-708-08-91

Sweden - Stockholm
Tel: 46-8-5090-4654

UK - Wokingham
Tel: 44-118-921-5800
Fax: 44-118-921-5820

06/23/16

© 2016 Microchip Technology Inc.