Control Devices—MMSM PIN Diodes

MPP4201-MPP4205

Product Overview

The MPP4200 series of PIN diodes can be used in RF circuits as an on/off element, as a switch, or as a current controlled resistor in attenuators extending over the frequency range from UHF through X band. Switch applications include high-speed switches (ECM systems). TR switches channel or antenna selection switches (Telcom and WLAN applications), duplexers (radar) and digital phase shifters (phased arrays). Attenuator type applications include amplitude modulators, AGC attenuators and power. This series of devices meets RoHS requirements.

Key Features

- Up to 10W incident RF power handling
- Low parasitics
- L_P = 0.02 nH typical
- C_P = 0.04 pF typical
- Broadband performance through X–band
- Available on tape and reel or on film, frame for pick and place
- Small, SOD 323 footprint
- RoHS compliant[1]

Package Styles

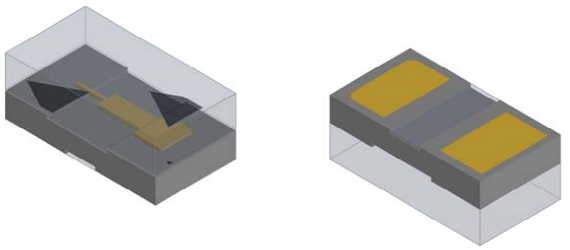

Applications

- Receiver protection circuits
- Broadband switching
- Economy switching
- RF attenuators
- MRI

Performance Overview

Parameters	Conditions	Value	Units
V_B	I_R = 10 µA	25, 50, 70	V
C_T	at –10V	0.10, 0.15, 0.20	pF
R_S	at 10 mA	2.0, 5.0	Ω
T_L		20, 50, 150	ns

Performance Curves

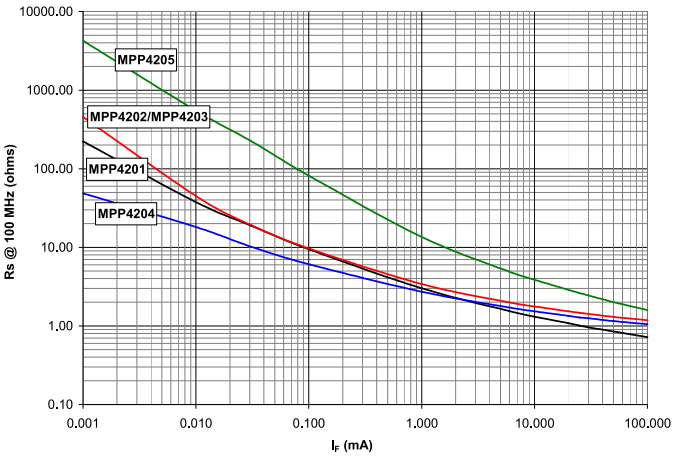

Note:

1. These devices are supplied with gold terminations.

© 2023 Microchip Technology Inc. and its subsidiaries

Table of Contents

Product Overview....1

1. Electrical Specifications....3
   - 1.1. Typical Electrical Performance....3
   - 1.2. Typical Performance Curves....3
   - 1.3. Absolute Maximum Ratings....4

2. Outline Drawing....5

3. Ordering Information....6

4. Revision History....7

Microchip Information....8
- The Microchip Website....8
- Product Change Notification Service....8
- Customer Support....8
- Microchip Devices Code Protection Feature....8
- Legal Notice....8
- Trademarks....9
- Quality Management System....10
- Worldwide Sales and Service....11

© 2023 Microchip Technology Inc. and its subsidiaries

1. Electrical Specifications

1.1 Typical Electrical Performance

Table 1-1. Device Electrical Parameters at 25 °C

PN	V_B	C_T[1]	R_s[2]	R_s[2]	R_s[2]	R_s[2]	T_L
	at I_R = 10 µA	at –10V	at 0.01 mA	at 1 mA	at 10 mA	at 20 mA	
	(V)	(pF)	(Ω)	(Ω)	(Ω)	(Ω)	(ns)
	(Min)	(Max)	(Typ)		(Max)	(Max)	(Typ)
MPP4201	70	0.20				2.5	150
MPP4202	50	0.15				2.8	50
MPP4203	50	0.10				3.0	50
MPP4204	25	0.15			2.0		20
MPP4205	70	0.15	250	7–16	5.0		150

Notes:

1. Capacitance is measured at f = 1 MHz.
2. Series Resistance (R_S) is measured at f = 100 MHz. Devices are mounted in a package suitable for testing.

1.2 Typical Performance Curves

Figure 1-1. Typical R_s vs. I_F at 25 °C

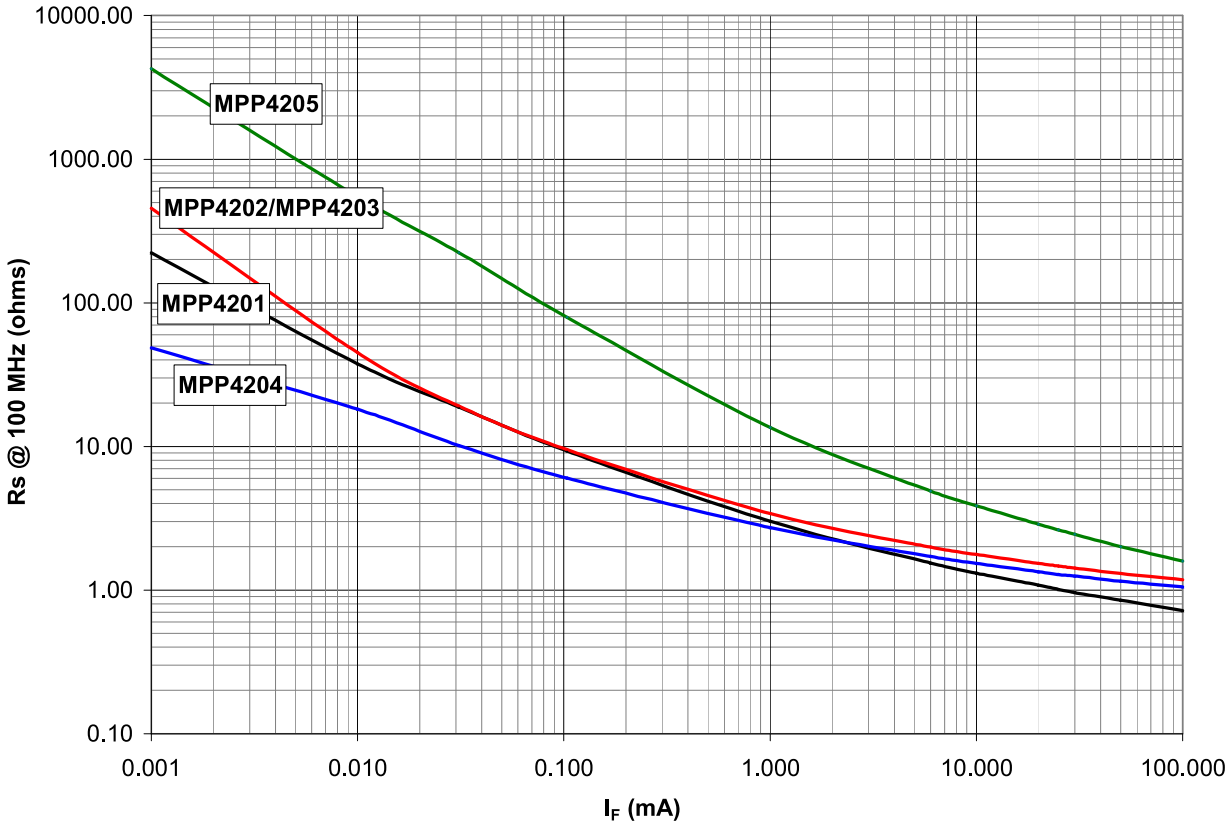

© 2023 Microchip Technology Inc. and its subsidiaries

1.3 Absolute Maximum Ratings

The following table shows the absolute maximum ratings at 25 °C unless otherwise specified.

Table 1-2. Absolute Maximum Ratings

Ratings	Symbol	Value	Unit
Maximum leakage current at 80% of minimum rated V_B	I_R	0.5	µA
Operating temperature	T_{OP}	–55 to +150	°C
Storage temperature	T_{STG}	–65 to +150	°C



ESD Sensitive Device

© 2023 Microchip Technology Inc. and its subsidiaries

2. Outline Drawing

Package Style – 206

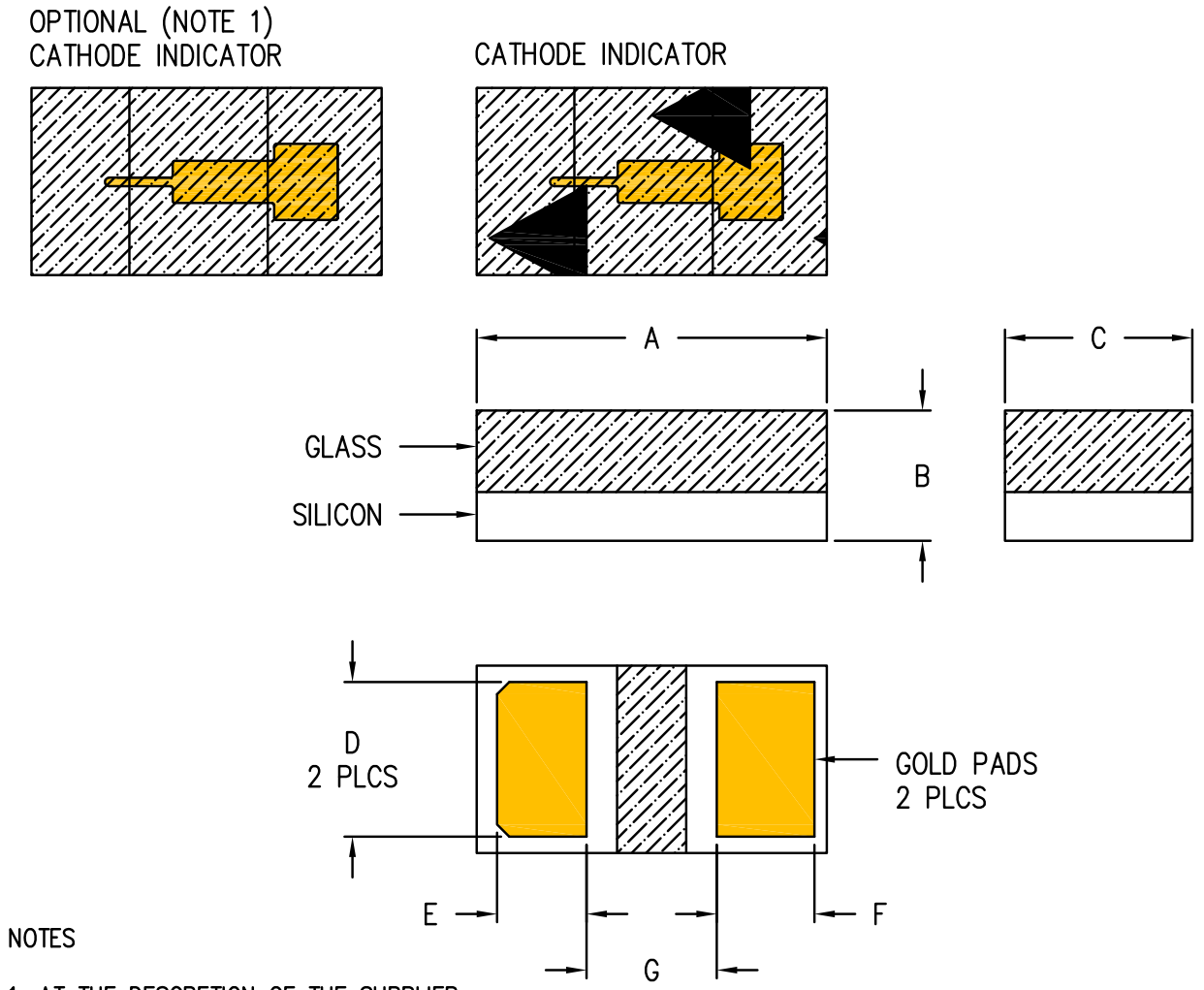

NOTES

1. AT THE DESCRETION OF THE SUPPLIER.

DIM	INCHES		MM	
	MIN	MAX	MIN	MAX
A	0.038	0.048	0.965	1.219
B	0.011	0.021	0.279	0.533
C	0.018	0.028	0.457	0.711
D	0.014	0.024	0.356	0.610
E	0.006	0.016	0.152	0.406
F	0.007	0.017	0.178	0.432
G	0.011	0.021	0.279	0.533

© 2023 Microchip Technology Inc. and its subsidiaries

3. Ordering Information

Part Number	Package Style
MPP4201	206
MPP4202	206
MPP4203	206
MPP4204	206
MPP4205	206

Figure 3-1. Tape and Reel Format–4 mm Pitch

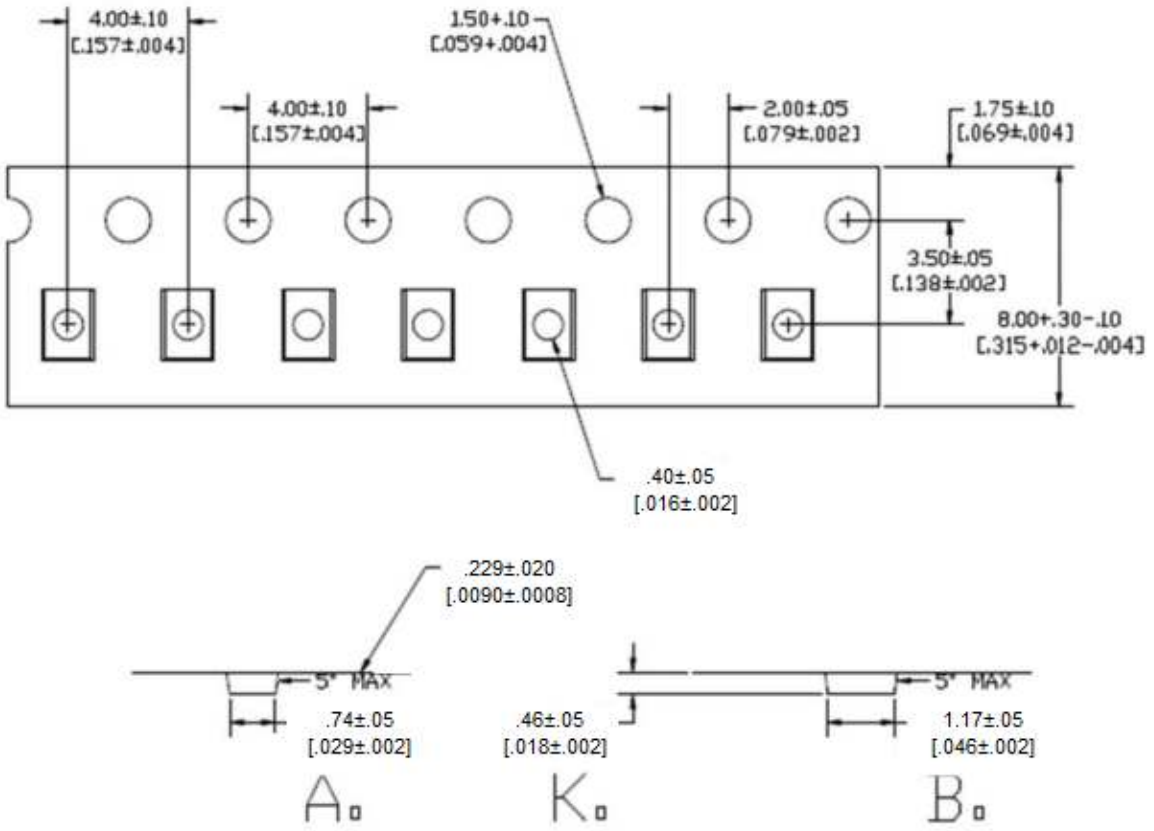

Notes:

1. For Waffle pack, use MPP42XX–206. For tape and reel use MPP42XX–206/TR.
2. 1000 or 5000 per reel dependent on customer.

© 2023 Microchip Technology Inc. and its subsidiaries

4. Revision History

The revision history describes the changes that were implemented in the document. The changes are listed by revision, starting with the most current publication.

Revision	Date	Description
A	07/2023	Document migrated from Microsemi template to Microchip template; Assigned Microchip literature number DS-00005059A.
Initial releases	04/2013 – 03/2020	Initial releases

© 2023 Microchip Technology Inc. and its subsidiaries

Microchip Information

The Microchip Website

Microchip provides online support via our website at www.microchip.com/. This website is used to make files and information easily available to customers. Some of the content available includes:

- **Product Support** – Data sheets and errata, application notes and sample programs, design resources, user's guides and hardware support documents, latest software releases and archived software
- **General Technical Support** – Frequently Asked Questions (FAQs), technical support requests, online discussion groups, Microchip design partner program member listing
- **Business of Microchip** – Product selector and ordering guides, latest Microchip press releases, listing of seminars and events, listings of Microchip sales offices, distributors and factory representatives

Product Change Notification Service

Microchip's product change notification service helps keep customers current on Microchip products. Subscribers will receive email notification whenever there are changes, updates, revisions or errata related to a specified product family or development tool of interest.

To register, go to www.microchip.com/pcn and follow the registration instructions.

Customer Support

Users of Microchip products can receive assistance through several channels:

- Distributor or Representative
- Local Sales Office
- Embedded Solutions Engineer (ESE)
- Technical Support

Customers should contact their distributor, representative or ESE for support. Local sales offices are also available to help customers. A listing of sales offices and locations is included in this document.

Technical support is available through the website at: www.microchip.com/support

Microchip Devices Code Protection Feature

Note the following details of the code protection feature on Microchip products:

- Microchip products meet the specifications contained in their particular Microchip Data Sheet.
- Microchip believes that its family of products is secure when used in the intended manner, within operating specifications, and under normal conditions.
- Microchip values and aggressively protects its intellectual property rights. Attempts to breach the code protection features of Microchip product is strictly prohibited and may violate the Digital Millennium Copyright Act.
- Neither Microchip nor any other semiconductor manufacturer can guarantee the security of its code. Code protection does not mean that we are guaranteeing the product is "unbreakable". Code protection is constantly evolving. Microchip is committed to continuously improving the code protection features of our products.

Legal Notice

This publication and the information herein may be used only with Microchip products, including to design, test, and integrate Microchip products with your application. Use of this information in any other manner violates these terms. Information regarding device applications is provided only for your convenience and may be superseded by updates. It is your responsibility to ensure

© 2023 Microchip Technology Inc. and its subsidiaries

that your application meets with your specifications. Contact your local Microchip sales office for additional support or, obtain additional support at www.microchip.com/en-us/support/design-help/client-support-services.

THIS INFORMATION IS PROVIDED BY MICROCHIP "AS IS". MICROCHIP MAKES NO REPRESENTATIONS OR WARRANTIES OF ANY KIND WHETHER EXPRESS OR IMPLIED, WRITTEN OR ORAL, STATUTORY OR OTHERWISE, RELATED TO THE INFORMATION INCLUDING BUT NOT LIMITED TO ANY IMPLIED WARRANTIES OF NON-INFRINGEMENT, MERCHANTABILITY, AND FITNESS FOR A PARTICULAR PURPOSE, OR WARRANTIES RELATED TO ITS CONDITION, QUALITY, OR PERFORMANCE.

IN NO EVENT WILL MICROCHIP BE LIABLE FOR ANY INDIRECT, SPECIAL, PUNITIVE, INCIDENTAL, OR CONSEQUENTIAL LOSS, DAMAGE, COST, OR EXPENSE OF ANY KIND WHATSOEVER RELATED TO THE INFORMATION OR ITS USE, HOWEVER CAUSED, EVEN IF MICROCHIP HAS BEEN ADVISED OF THE POSSIBILITY OR THE DAMAGES ARE FORESEEABLE. TO THE FULLEST EXTENT ALLOWED BY LAW, MICROCHIP'S TOTAL LIABILITY ON ALL CLAIMS IN ANY WAY RELATED TO THE INFORMATION OR ITS USE WILL NOT EXCEED THE AMOUNT OF FEES, IF ANY, THAT YOU HAVE PAID DIRECTLY TO MICROCHIP FOR THE INFORMATION.

Use of Microchip devices in life support and/or safety applications is entirely at the buyer's risk, and the buyer agrees to defend, indemnify and hold harmless Microchip from any and all damages, claims, suits, or expenses resulting from such use. No licenses are conveyed, implicitly or otherwise, under any Microchip intellectual property rights unless otherwise stated.

Trademarks

The Microchip name and logo, the Microchip logo, Adaptec, AVR, AVR logo, AVR Freaks, BesTime, BitCloud, CryptoMemory, CryptoRF, dsPIC, flexPWR, HELDO, IGLOO, JukeBlox, KeeLoq, Kleer, LANCheck, LinkMD, maXStylus, maXTouch, MediaLB, megaAVR, Microsemi, Microsemi logo, MOST, MOST logo, MPLAB, OptoLyzer, PIC, picoPower, PICSTART, PIC32 logo, PolarFire, Prochip Designer, QTouch, SAM-BA, SenGenuity, SpyNIC, SST, SST Logo, SuperFlash, Symmetricom, SyncServer, Tachyon, TimeSource, tinyAVR, UNI/O, Vectron, and XMEGA are registered trademarks of Microchip Technology Incorporated in the U.S.A. and other countries.

AgileSwitch, APT, ClockWorks, The Embedded Control Solutions Company, EtherSynch, Flashtec, Hyper Speed Control, HyperLight Load, Libero, motorBench, mTouch, Powermite 3, Precision Edge, ProASIC, ProASIC Plus, ProASIC Plus logo, Quiet- Wire, SmartFusion, SyncWorld, Temux, TimeCesium, TimeHub, TimePictra, TimeProvider, TrueTime, and ZL are registered trademarks of Microchip Technology Incorporated in the U.S.A.

Adjacent Key Suppression, AKS, Analog-for-the-Digital Age, Any Capacitor, AnyIn, AnyOut, Augmented Switching, BlueSky, BodyCom, Clockstudio, CodeGuard, CryptoAuthentication, CryptoAutomotive, CryptoCompanion, CryptoController, dsPICDEM, dsPICDEM.net, Dynamic Average Matching, DAM, ECAN, Espresso T1S, EtherGREEN, GridTime, IdealBridge, In-Circuit Serial Programming, ICSP, INICnet, Intelligent Paralleling, IntelliMOS, Inter-Chip Connectivity, JitterBlocker, Knob-on-Display, KoD, maxCrypto, maxView, memBrain, Mindi, MiWi, MPASM, MPF, MPLAB Certified logo, MPLIB, MPLINK, MultiTRAK, NetDetach, Omniscient Code Generation, PICDEM, PICDEM.net, PICkit, PICtail, PowerSmart, PureSilicon, QMatrix, REAL ICE, Ripple Blocker, RTAX, RTG4, SAM-ICE, Serial Quad I/O, simpleMAP, SimpliPHY, SmartBuffer, SmartHLS, SMART-I.S., storClad, SQI, SuperSwitcher, SuperSwitcher II, Switchtec, SynchroPHY, Total Endurance, Trusted Time, TSHARC, USBCheck, VariSense, VectorBlox, VeriPHY, ViewSpan, WiperLock, XpressConnect, and ZENA are trademarks of Microchip Technology Incorporated in the U.S.A. and other countries.

SQTP is a service mark of Microchip Technology Incorporated in the U.S.A.

The Adaptec logo, Frequency on Demand, Silicon Storage Technology, and Symmcom are registered trademarks of Microchip Technology Inc. in other countries.

GestIC is a registered trademark of Microchip Technology Germany II GmbH & Co. KG, a subsidiary of Microchip Technology Inc., in other countries.

All other trademarks mentioned herein are property of their respective companies.

© 2023 Microchip Technology Inc. and its subsidiaries

© 2023, Microchip Technology Incorporated and its subsidiaries. All Rights Reserved.

ISBN: 978-1-6683-2723-4

Quality Management System

For information regarding Microchip's Quality Management Systems, please visit www.microchip.com/quality.

© 2023 Microchip Technology Inc. and its subsidiaries

Worldwide Sales and Service

AMERICAS	ASIA/PACIFIC	ASIA/PACIFIC	EUROPE
Corporate Office	**Australia - Sydney**	**India - Bangalore**	**Austria - Wels**
2355 West Chandler Blvd.	Tel: 61-2-9868-6733	Tel: 91-80-3090-4444	Tel: 43-7242-2244-39
Chandler, AZ 85224-6199	**China - Beijing**	**India - New Delhi**	Fax: 43-7242-2244-393
Tel: 480-792-7200	Tel: 86-10-8569-7000	Tel: 91-11-4160-8631	**Denmark - Copenhagen**
Fax: 480-792-7277	**China - Chengdu**	**India - Pune**	Tel: 45-4485-5910
Technical Support:	Tel: 86-28-8665-5511	Tel: 91-20-4121-0141	Fax: 45-4485-2829
www.microchip.com/support	**China - Chongqing**	**Japan - Osaka**	**Finland - Espoo**
Web Address:	Tel: 86-23-8980-9588	Tel: 81-6-6152-7160	Tel: 358-9-4520-820
www.microchip.com	**China - Dongguan**	**Japan - Tokyo**	**France - Paris**
Atlanta	Tel: 86-769-8702-9880	Tel: 81-3-6880- 3770	Tel: 33-1-69-53-63-20
Duluth, GA	**China - Guangzhou**	**Korea - Daegu**	Fax: 33-1-69-30-90-79
Tel: 678-957-9614	Tel: 86-20-8755-8029	Tel: 82-53-744-4301	**Germany - Garching**
Fax: 678-957-1455	**China - Hangzhou**	**Korea - Seoul**	Tel: 49-8931-9700
Austin, TX	Tel: 86-571-8792-8115	Tel: 82-2-554-7200	**Germany - Haan**
Tel: 512-257-3370	**China - Hong Kong SAR**	**Malaysia - Kuala Lumpur**	Tel: 49-2129-3766400
Boston	Tel: 852-2943-5100	Tel: 60-3-7651-7906	**Germany - Heilbronn**
Westborough, MA	**China - Nanjing**	**Malaysia - Penang**	Tel: 49-7131-72400
Tel: 774-760-0087	Tel: 86-25-8473-2460	Tel: 60-4-227-8870	**Germany - Karlsruhe**
Fax: 774-760-0088	**China - Qingdao**	**Philippines - Manila**	Tel: 49-721-625370
Chicago	Tel: 86-532-8502-7355	Tel: 63-2-634-9065	**Germany - Munich**
Itasca, IL	**China - Shanghai**	**Singapore**	Tel: 49-89-627-144-0
Tel: 630-285-0071	Tel: 86-21-3326-8000	Tel: 65-6334-8870	Fax: 49-89-627-144-44
Fax: 630-285-0075	**China - Shenyang**	**Taiwan - Hsin Chu**	**Germany - Rosenheim**
Dallas	Tel: 86-24-2334-2829	Tel: 886-3-577-8366	Tel: 49-8031-354-560
Addison, TX	**China - Shenzhen**	**Taiwan - Kaohsiung**	**Israel - Ra'anana**
Tel: 972-818-7423	Tel: 86-755-8864-2200	Tel: 886-7-213-7830	Tel: 972-9-744-7705
Fax: 972-818-2924	**China - Suzhou**	**Taiwan - Taipei**	**Italy - Milan**
Detroit	Tel: 86-186-6233-1526	Tel: 886-2-2508-8600	Tel: 39-0331-742611
Novi, MI	**China - Wuhan**	**Thailand - Bangkok**	Fax: 39-0331-466781
Tel: 248-848-4000	Tel: 86-27-5980-5300	Tel: 66-2-694-1351	**Italy - Padova**
Houston, TX	**China - Xian**	**Vietnam - Ho Chi Minh**	Tel: 39-049-7625286
Tel: 281-894-5983	Tel: 86-29-8833-7252	Tel: 84-28-5448-2100	**Netherlands - Drunen**
Indianapolis	**China - Xiamen**		Tel: 31-416-690399
Noblesville, IN	Tel: 86-592-2388138		Fax: 31-416-690340
Tel: 317-773-8323	**China - Zhuhai**		**Norway - Trondheim**
Fax: 317-773-5453	Tel: 86-756-3210040		Tel: 47-72884388
Tel: 317-536-2380			**Poland - Warsaw**
Los Angeles			Tel: 48-22-3325737
Mission Viejo, CA			**Romania - Bucharest**
Tel: 949-462-9523			Tel: 40-21-407-87-50
Fax: 949-462-9608			**Spain - Madrid**
Tel: 951-273-7800			Tel: 34-91-708-08-90
Raleigh, NC			Fax: 34-91-708-08-91
Tel: 919-844-7510			**Sweden - Gothenberg**
New York, NY			Tel: 46-31-704-60-40
Tel: 631-435-6000			**Sweden - Stockholm**
San Jose, CA			Tel: 46-8-5090-4654
Tel: 408-735-9110			**UK - Wokingham**
Tel: 408-436-4270			Tel: 44-118-921-5800
Canada - Toronto			Fax: 44-118-921-5820
Tel: 905-695-1980			
Fax: 905-695-2078			

© 2023 Microchip Technology Inc. and its subsidiaries