PM5980/PM5981 DIGI-100GX

1x 100G/2x 40G/10x 10G Multi-Service OTN Processor

Summary

The PM5980 DIGI-100GX (with encryption) and PM5981 DIGI-100GX (no encryption) are members of Microchip's fourth-generation family of OTN processing solutions for OTN switching and packet-optical transport platforms (P-OTPs/P-OTNs), Wavelength Division Multiplexing (WDM) and Reconfigurable Optical Add-Drop Multiplexers (ROADMs).

Built upon the foundation of OTN Processing IP from Microchip's DIGI-120G, widely deployed in service provider and hyperscale datacenter networks today, the DIGI-100GX is a high-density, multi-service OTN processor. The DIGI-100GX has the feature integration and the scalability to enable the mass deployment of service flexible, elastic bandwidth, resource efficient and cost-effective 100G optical transport architectures required for multi-layer SDN controlled networks.

Reusing proven, carrier-grade Microchip OTN Software IP libraries and toolkits, the DIGI-100GX can be leveraged across multiple applications and equipment platforms to reduce OEM development costs while accelerating time-to-market.

The DIGI-100GX expands the DIGI family of OTN processors, adding key technologies and capabilities such as:

- Deeply channelized architecture, supporting single-chip 100G line card applications
- Integrated 28G SERDES, enabling connectivity to next-generation DSPs, optical modules and backplanes
- FIPS 197 certified CrypOTN OTN payload encryption, enabling secure, protocol-agnostic, wire-speed transport applications
- OTU4flex, a flexible framer-to-NG-Coherent-DSP interface protocol, enabling scalable line-rate WDM architectures
- Flexible Interlaken controllers, enabling 100G hybrid OTN/packet line/client card and compact metro OTN switching platform architectures
- Next-generation datacenter/storage client support, including 25 GE and 16G and 32G Fibre Channel
- Integrated GCC processor, reducing the need for auxiliary components and lowering the overall line card cost
- Per-port LLDP packet monitoring capabilities for 10 GE/40 GE/100 GE clients, enabling WAN topology auto-discovery in DCI and SDN-enabled applications

Highlights

- Reduces Service Provider CapEx and OpEx for 100G deployments:
  - High-capacity OTN switching and aggregation with support for hybrid packet/OTN optical transport architectures dramatically improves 100G wavelength utilization and simplifies equipment deployment and network management
  - Universal line card solution simplifies line card management
- Supports Datacenter Interconnect (DCI) transport requirements:
  - Integrated FIPS 197 certified protocol-agnostic wire-speed layer 1 OTN payload encryption
  - Integrated LLDP packet monitoring on Ethernet clients for WAN topology auto-discovery in DCI and SDN-enabled transport networks
  - On-chip OTN switch enabling the design of high-capacity, compact Nx100G DCI platforms
- Enables unprecedented service delivery and network deployment flexibility:
  - Widest range of multi-service client mappings into OTN
- Enables full SNCP-based protection switching for ring, point-to-point or meshed network topologies
  - Multi-stage OTN multiplexing, enabling compatibility and interoperability between network nodes
- Optimized power and footprint for OEMs:
  - Connects directly to a wide range of 100G, 40G and 10G optical modules including CFP, CFP2, CFP4, QSFP28, CXP (limiting), QSFP/QSFP+ (limiting), XFP, SFP+ (limiting)
  - Generates all client protocols and device interface rates from internal PLLs with a single 125 MHz external reference clock
  - Provides glueless interconnects to many off-the-shelf NPs and switch fabrics
  - Carrier-grade, field-proven OTN Software Development Kit reduces OEM development costs and accelerates time to market

500G Hybrid Line Card

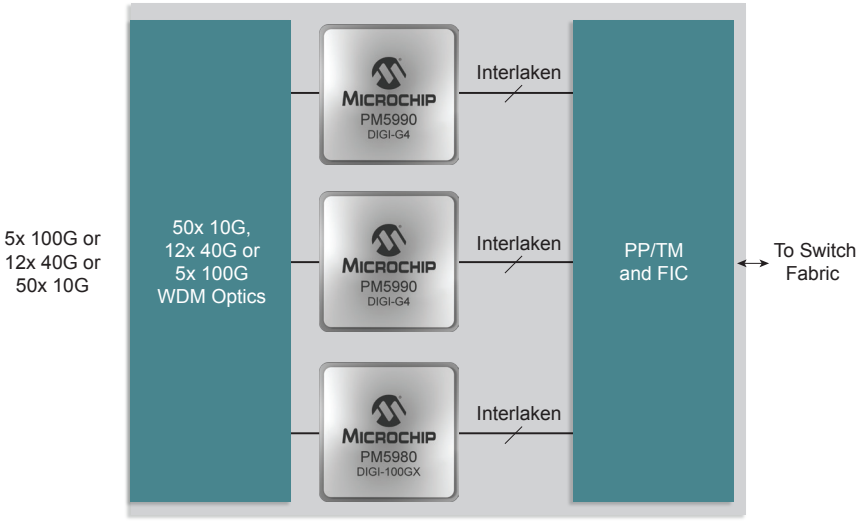

10x 10G/2x 40G/1x 100G Line/Client/Hybrid P-OTP Line Card

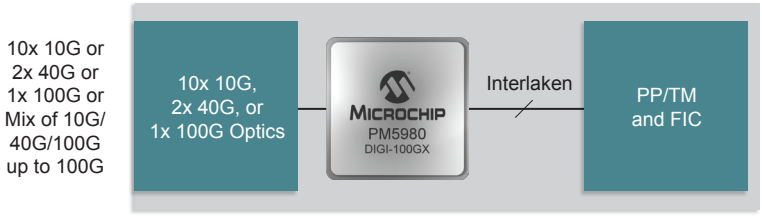

Single-Chip 100G Muxponder/Transponder/OTN Switch

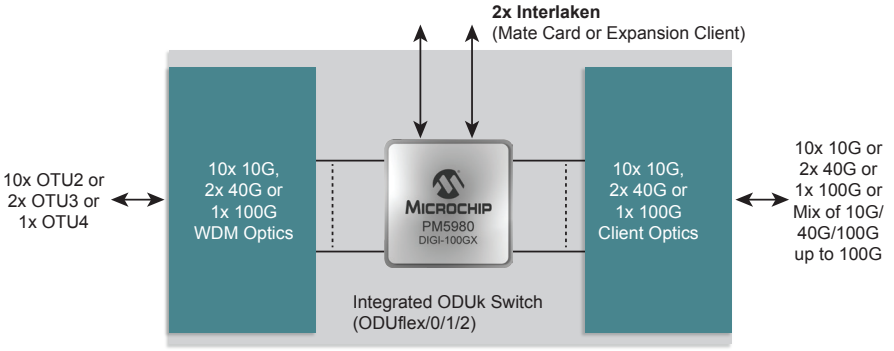

Compact 400G Metro P-OTP/P-OTN

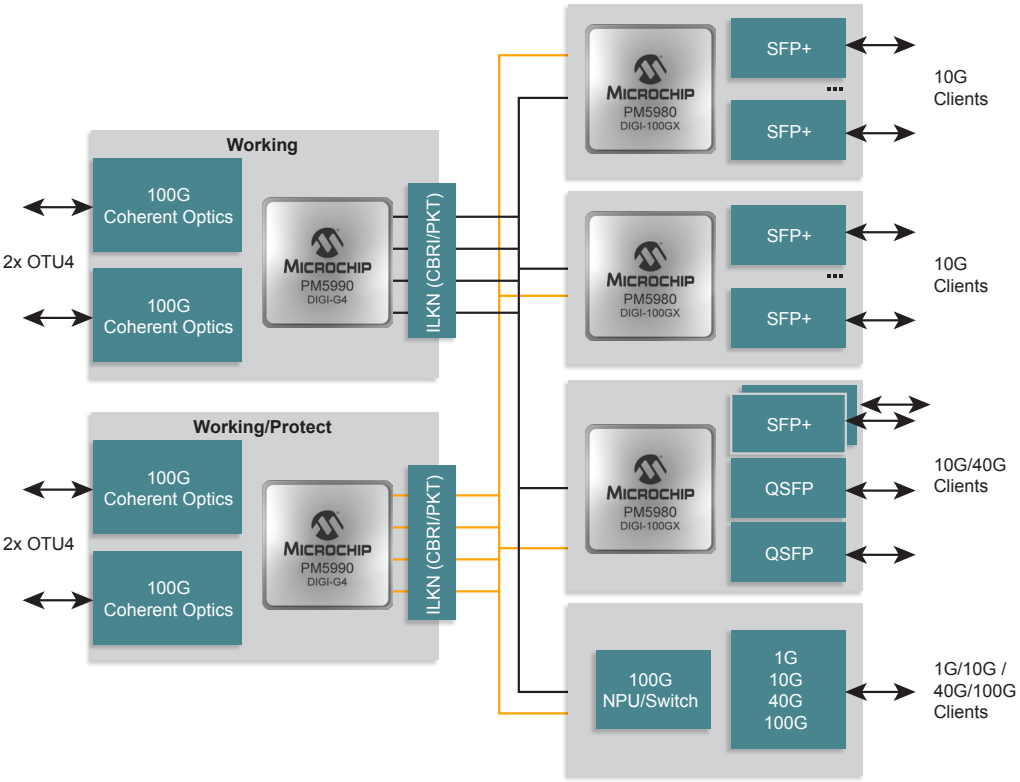

For More Information

www.microsemi.com

The Microchip name and logo and the Microchip logo are registered trademarks of Microchip Technology Incorporated in the U.S.A. and other countries. All other trademarks mentioned herein are property of their respective companies.
© 2019, Microchip Technology Incorporated. All Rights Reserved. 10/19

DS00003232A