PM5990 DIGI-G4 Mobile Fronthaul Solution

Enabling 100G OTN Fronthaul for Converged 4G and 5G Networks

The PM5990 DIGI-G4 Mobile Fronthaul Solution enables high-capacity fronthaul connectivity for converged 4G and 5G centralized radio access networks (C-RANs). The solution breaks new ground by extending 100G optical transport network (OTN) into the RAN to simultaneously aggregate high-density CPRI, 10GE, and 25GE radio links. Microsemi's solution for Mobile Fronthaul networking enables up to a 10× increase in capacity, while introducing innovations that address the need for low latency with link equalization and network security. The platform enables a single architecture that spans today's 4G deployments with built-in support for the transition to 5G.

Unlike conventional WDM solutions that allow for oneradio per WDM link, Microsemi's DIGI-G4 OTN fronthaul architecture allows for the aggregation of multiple 4G or 5G radio links into 100G OTN connections that delivers up to a 10× capacity scaling over existing optical infrastructure.

Differentiated with an embedded optical link security engine, integrated patent-pending real-time link latency equalization, and simultaneous support for 4G CPRI and 5G Ethernet protocols, Microsemi is helping redefine the CAPEX and OPEX cost of ownership paradigm in building fronthaul networks for mobile operators.

Microsemi's Mobile Fronthaul solution can be deployed as an upgrade to existing systems, allowing OEMs to quickly add fronthaul support to existing cards at minimal incremental cost.

Mobile Operator and OEM Benefits

Unparalleled Fronthaul Capacity for 4G and 5G

- Increases fronthaul capacity by up to 10× compared to traditional fronthaul solutions
- Provides 2× 100G fronthaul uplinks supporting simultaneous CPRI and Ethernet clients

Reduced CapEx and OpEx for Mobile Operators

- Enables use of low-cost 100GBASE-LR4 optics
- Simplifies optical transceiver inventory management by optionally eliminating the need for WDM optics

Simplifies Fronthaul Network Deployment

- Uplink and downlink latency measurement and equalization
- Supports fronthaul network protection with configurable latency compensation

Lowest Risk and Fastest Time-to-Market

- Built on Microsemi's production-released and field-proven DIGI-G4 family hardware and software platform
- Enables simple and low-cost upgrade of existing cards to support fronthaul

Fronthaul-Enabled 2× 100G Muxponder



Fronthaul-Enabled 100G WDM Muxponder



PM5990 DIGI-G4 Mobile Fronthaul Solution

Enabling 100G OTN Fronthaul for Converged 4G and 5G Networks

Solution Features

Enabling 100G OTN and Link Security for Fronthaul

- Simultaneous aggregation of 4G and 5G radios into 100G links eliminates the need for WDM optics
- Embedded optical security engine secures links connecting radios to baseband

Future-Proof Radio Protocol Support

- 4G protocols—CPRI option 5, 6, 7, and 10
- 5G protocols—10GE, 25GE, 40GE, and 100GE

Ethernet and Synchronization Features

- 802.3 PCS and MAC
- G.8261 Synchronous Ethernet (SyncE)
- IEEE 1588v2 PTP timing over packet, and PTP over OTN

Uplink and Downlink CPRI Functions

- Per CPRI latency measurement and reporting
- Uplink and downlink latency equalization
- Latency compensation for working and protect paths

Best-in-Class Fronthaul Performance

- Latency as low as 2.5 microseconds
- Up to 75% margin to CPRI jitter spec
- Latency equalization to within nanoseconds

Rich PMON and Carrier-Grade OAM

- CPRI, OTN, and Ethernet layer
- ODUk SNCP and 1+1 Line protectionm
- Compatible with Transponder, Muxponder, and OTN switched deployments

Enabling 4G and 5G Mobile Fronthaul with the DIGI-G4 Family

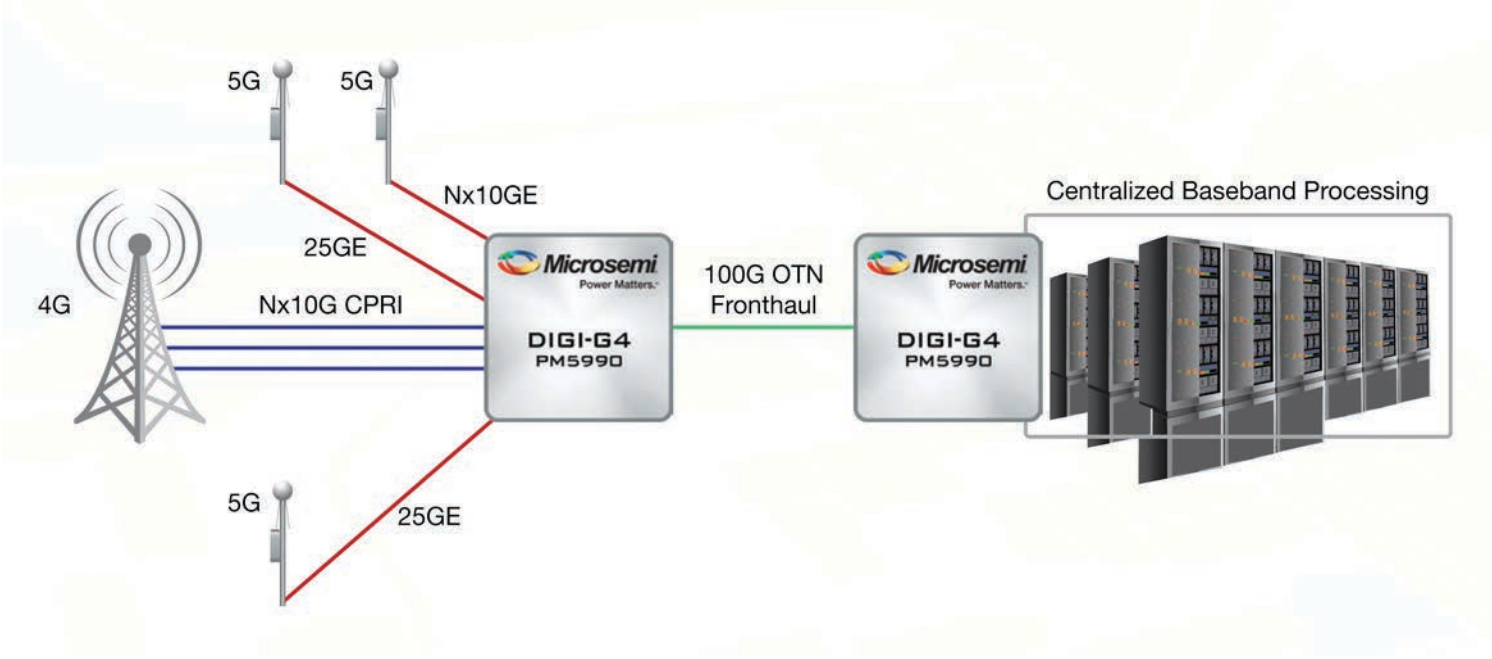

Microsemi
Power Matters.

Microsemi Corporate Headquarters
One Enterprise, Aliso Viejo, CA 92656 USA
Within the USA: +1 (800) 713-4113
Outside the USA: +1 (949) 380-6100
Fax: +1 (949) 215-4996
Email: sales.support@microsemi.com
www.microsemi.com

©2017 Microsemi Corporation. All rights reserved. Microsemi and the Microsemi logo are registered trademarks of Microsemi Corporation. All other trademarks and service marks are the property of their respective owners.

Microsemi Corporation (Nasdaq: MSCC) offers a comprehensive portfolio of semiconductor and system solutions for aerospace & defense, communications, data center and industrial markets. Products include high-performance and radiation-hardened analog mixed-signal integrated circuits, FPGAs, SoCs and ASICs; power management products; timing and synchronization devices and precise time solutions, setting the world's standard for time; voice processing devices; RF solutions; discrete components; enterprise storage and communication solutions, security technologies and scalable anti-tamper products; Ethernet solutions; Power-over-Ethernet ICs and midspans; as well as custom design capabilities and services. Microsemi is headquartered in Aliso Viejo, California and has approximately 4,800 employees globally. Learn more at www.microsemi.com.

Microsemi makes no warranty, representation, or guarantee regarding the information contained herein or the suitability of its products and services for any particular purpose, nor does Microsemi assume any liability whatsoever arising out of the application or use of any product or circuit. The products sold hereunder and any other products sold by Microsemi have been subject to limited testing and should not be used in conjunction with mission-critical equipment or applications. Any performance specifications are believed to be reliable but are not verified, and Buyer must conduct and complete all performance and other testing of the products, alone and together with, or installed in, any end-products. Buyer shall not rely on any data and performance specifications or parameters provided by Microsemi. It is the Buyer's responsibility to independently determine suitability of any products and to test and verify the same. The information provided by Microsemi hereunder is provided "as is, where is" and with all faults, and the entire risk associated with such information is entirely with the Buyer. Microsemi does not grant, explicitly or implicitly, to any party any patent rights, licenses, or any other IP rights, whether with regard to such information itself or anything described by such information. Information provided in this document is proprietary to Microsemi, and Microsemi reserves the right to make any changes to the information in this document or to any products and services at any time without notice.

ESC-2170449. 2.0. 11/17