Switchtec™ PFX PCIe® Gen4 Fanout Switch Family

PM40100, PM40084, PM40068, PM40052, PM40036, PM40028

Summary

The Switchtec PFX PCIe Gen4 Fanout Switch Family comprises high-reliability switches supporting up to 100 lanes, 52 ports, 26 virtual switch partitions, 48 non-transparent bridges (NTBs), hot- and surprise-plug controllers for each port, advanced error containment and comprehensive diagnostics and debug capabilities.

Typical applications for the PFX include data center equipment, defense and industrial servers, workstations, test equipment, video production and broadcasting equipment, cellular infrastructure, access networks, metro networks and core networking.



Features

High-Performance Non-Blocking Gen4 Switches

- 100-lane, 84-lane, 68-lane, 52-lane, 36-lane and 28-lane variants
- Ports bifurcate from to x1[1] /x2/x4/x8/x16 lanes
- Up to 48 NTBs assignable to any port
- Logical non-transparent (NT) interconnect allows for larger topologies (up to 256 masters)
- Supports 1+1 and N+1 failover mechanisms
- NT address translation using direct windows and multiple sub-windows per BAR
- Supports multicast groups per port

DMA Controller

- High-performance, ultra-low latency cut-through DMA engine
- Up to 64 DMA channels

Error Containment

- Advanced Error Reporting (AER) on all ports
- Downstream Port Containment (DPC) on all downstream ports
- Poisoned TLP blocking
- Completion Timeout Synthesis (CTS) to prevent an error state in an upstream host due to incomplete non-posted transactions
- Hot- and surprise-plug controllers per port
- GPIOs configurable for different cable/connector standards

[1] x1 natively on four lanes

PCIe Interfaces

- Passive, managed and optical cables
- SFF-8644, SFF-8643, SFF-8639, OCuLink and other connectors
- SHPC-enabled slot and edge connectors

Diagnostics and Debug

- Transaction Layer Packet (TLP) generator for testing and debugging of links and error handling
- Real-time eye capture
- External loopback capability
- Errors, statistics, performance and TLP latency counters

Highlights

- High-reliability PCIe: robust error containment, hot- and surprise-plug controllers per port, end-to-end data integrity protection, ECC protection on RAMs, high-quality, low-power SERDES
- Comprehensive diagnostics and debugging: PCIe generator and analyzer, per-port performance and error counters, multiple loopback modes and real-time eye capture
- Significant power, cost and board space savings with support for:
  - Up to 52 ports, 48 NTBs, and 26 virtual switch partitions
  - Flexible x1[1], x2, x4, x8, and x16 port bifurcation with no restrictions on configuring ports as either upstream or downstream, or on mapping ports to NTBs
- Secure system solution with boot image authentication and remote attestation

Peripheral I/O Interfaces

- Up to 11 Two-Wire Interfaces (TWIs) with SMBus support
- Up to 4 SFF-8485-compliant SGPIO ports
- Up to 103 parallel GPIO pins
- 10/100 Ethernet MAC port (MII/RMII) (PFX 96x/80x/64xG4)
- Up to 4 UARTs
- JTAG and EJTAG interface

High-Speed I/O

- PCIe Gen4 16 GT/s
- Supports PCIe-compliant link training and manual PHY configuration
- Manual PHY configuration for optical

Power Management

- Active State Power Management (ASPM)
- Software-controlled power management

ChipLink Diagnostic Tools

- Extensive debug, diagnostics, configuration and analysis tools with an intuitive GUI
- Access to configuration data, management capabilities and signal integrity analysis tools (such as real-time eye capture)
- Connects to device over in-band PCIe or sideband signals (UART, TWI and EJTAG)

Evaluation Kit

The PM42100-KIT Switchtec Gen4 PCIe Switch Evaluation Kit is a device evaluation environment that supports multiple interfaces.

Example Application

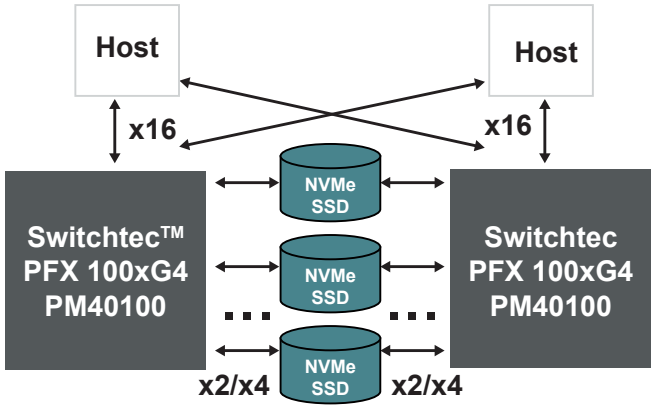

Ordering Information

Product	Part Numbers	Lanes	Ports/NTBs	Partitions	Hot-Plug Controllers	Package
PFX 100xG4 Gen4 PCIe® Fanout Switch	PM40100A-FEIP	100	52/48	26	52	40 mm × 40 mm
PFX 84xG4 Gen4 PCIe Fanout Switch	PM40084A-FEIP	84	44/44	22	44	40 mm × 40 mm
PFX 68xG4 Gen4 PCIe Fanout Switch	PM40068A-FEIP	68	36/36	18	36	40 mm × 40 mm
PFX 52xG4 Gen4 PCIe Fanout Switch	PM40052A-F3EIP	52	28/28	1	28	29 mm × 29 mm
PFX 36xG4 Gen4 PCIe Fanout Switch	PM40036A-F3EIP	36	20/20	10	20	29 mm × 29 mm
PFX 28xG4 Gen4 PCIe Fanout Switch	PM40028A-F3EIP	28	16/16	8	16	29 mm × 29 mm

The Microchip name and logo, the Microchip logo and Switchtec are registered trademarks of Microchip Technology Incorporated in the U.S.A. and other countries. All other trademarks mentioned herein are property of their respective companies.
© 2018, Microchip Technology Incorporated. All Rights Reserved. 11/18

Looking for pricing, stock, or lifecycle information?

Click below to explore more details on WIN SOURCE:

- View PM40100B-FEIP on WIN SOURCE
- Microchip Technology Information

Optimize Your Supply Chain with WIN SOURCE Solutions

- Global Sourcing Solution
- Obsolete Management
- Cost Control Management
- Shortage Management
- Alternative Solution
- Excess Inventory Management