RoHS
Available on commercial versions

PNP Darlington Power Silicon Transistor

Qualified per MIL-PRF-19500/527

Qualified Levels:
JAN, JANTX, and JANTXV

DESCRIPTION

This high speed PNP transistor is rated at -10 amps and is military qualified up to the JANTXV level. This TO-204AA isolated package features a 180 degree lead orientation.

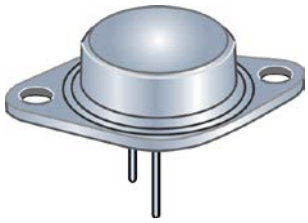

TO-204AA (TO-3) Package

Important: For the latest information, visit our website http://www.microsemi.com.

FEATURES

- JEDEC registered 2N6648 through 2N6650
- JAN, JANTX, and JANTXV qualifications are available per MIL-PRF-19500/527
- RoHS compliant versions available (commercial grade only)

APPLICATIONS / BENEFITS

- Military and other high reliability applications
- High frequency response
- TO-204AA case with isolated terminals

MAXIMUM RATINGS @ T_A = +25 °C unless otherwise noted

Parameters/Test Conditions		Symbol	Value	Unit
Junction and Storage Temperature		T_J and T_{STG}	-65 to +175	°C
Thermal Resistance Junction-to-Case		$R_{\Theta JC}$	1.76	°C/W
Collector-Emitter Voltage	2N6648	V_{CEO}	-40	V
	2N6649		-60	
	2N6650		-80	
Collector-Base Voltage	2N6648	V_{CBO}	-40	V
	2N6649		-60	
	2N6650		-80	
Emitter-Base Voltage		V_{EBO}	-5	V
Total Power Dissipation	@ T_A = +25 °C (1)	P_T	5.0	W
	@ T_C = +25 °C (2)		85	
Base Current		I_B	-0.25	A
Collector Current		I_C	-10	A

Notes: 1. Derate linearly 33.3 mW/°C above T_A > +25 °C.
2. Derate linearly 567 mW/°C above T_C > +25 °C.

MSC – Lawrence
6 Lake Street,
Lawrence, MA 01841
1-800-446-1158
(978) 620-2600
Fax: (978) 689-0803

MSC – Ireland
Gort Road Business Park,
Ennis, Co. Clare, Ireland
Tel: +353 (0) 65 6840044
Fax: +353 (0) 65 6822298

Website:
www.microsemi.com

©2013 Microsemi Corporation

MECHANICAL and PACKAGING

- CASE: Industry standard TO-204AA (TO-3), hermetically sealed, 0.040 inch diameter pins
- FINISH: Solder dipped tin-lead over nickel plated alloy 52 or RoHS compliant matte-tin plating. Solderable per MIL-STD-750 method 2026.
- POLARITY: PNP (see schematic)
- MOUNTING HARDWARE: Consult factory for optional insulator and sheet metal screws
- WEIGHT: Approximately 15 grams
- See package dimensions on last page.

PART NOMENCLATURE

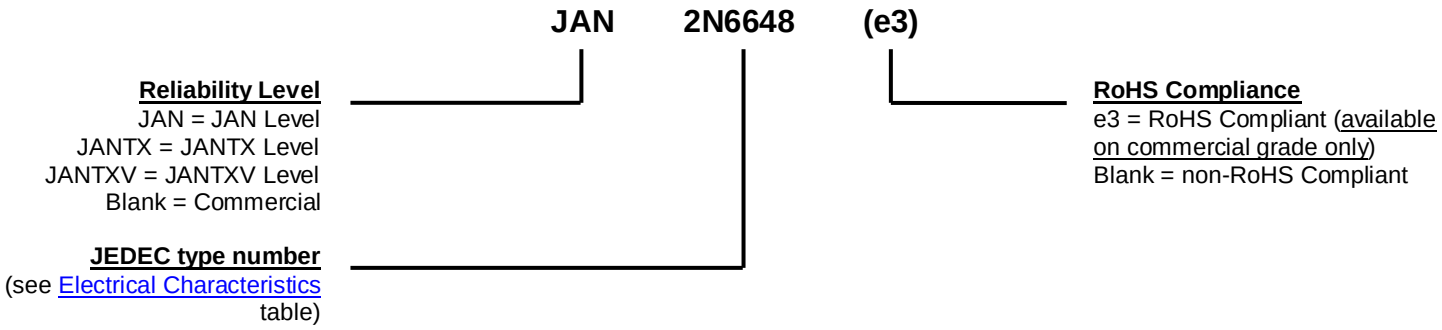

SYMBOLS & DEFINITIONS

Symbol	Definition
I_B	Base current: The value of the dc current into the base terminal.
I_C	Collector current: The value of the dc current into the collector terminal.
I_E	Emitter current: The value of the dc current into the emitter terminal.
T_C	Case temperature: The temperature measured at a specified location on the case of a device.
V_{CB}	Collector-base voltage: The dc voltage between the collector and the base.
V_{CBO}	Collector-base voltage, base open: The voltage between the collector and base terminals when the emitter terminal is open-circuited.
V_{CC}	Collector-supply voltage: The supply voltage applied to a circuit connected to the collector.
V_{CEO}	Collector-emitter voltage, base open: The voltage between the collector and the emitter terminals when the base terminal is open-circuited.
V_{CE}	Collector-emitter voltage: The dc voltage between the collector and the emitter.
V_{EB}	Emitter-base voltage: The dc voltage between the emitter and the base.
V_{EBO}	Emitter-base voltage, collector open: The voltage between the emitter and base terminals with the collector terminal open-circuited.

©2013 Microsemi Corporation

ELECTRICAL CHARACTERISTICS @ T_A = +25 °C unless otherwise noted

Characteristics		Symbol	Min.	Max.	Unit
OFF CHARACTERISTICS					
Collector-Emitter Breakdown Voltage I_C = -200 mA	2N6648 2N6649 2N6650	$V_{(BR)CEO}$	-40 -60 -80		V
Collector-Emitter Breakdown Voltage I_C = -200 mA, R_{BB} = 100 Ω	2N6648 2N6649 2N6650	$V_{(BR)CER}$	-40 -60 -80		V
Collector-Emitter Cutoff Current V_{CE} = -40 V V_{CE} = -60 V V_{CE} = -80 V	2N6648 2N6649 2N6650	I_{CEO}		-1.0	mA
Collector-Emitter Cutoff Current V_{CE} = -40 V, V_{BE} = 1.5 V V_{CE} = -60 V, V_{BE} = 1.5 V V_{CE} = -80 V, V_{BE} = 1.5 V	2N6648 2N6649 2N6650	I_{CEX}		10	µA
Emitter-Base Cutoff Current V_{EB} = 5.0 V		I_{EBO}		-10	mA
Collector-Emitter Cutoff Current V_{CE} = -40 V V_{CE} = -60 V V_{CE} = -80 V	2N6648 2N6649 2N6650	I_{CBO}		-1.0	mA
ON CHARACTERISTICS					
Forward-Current Transfer Ratio I_C = -1.0 A, V_{CE} = -3.0 V I_C = -5 A, V_{CE} = -3.0 V I_C = -10 A, V_{CE} = -3.0 V I_C = -5 A, V_{CE} = -3.0 V, T_A = -65 ºC		h_{FE}	300 1,000 100 200	20,000	
Collector-Emitter Saturation Voltage I_C = -5.0 A, I_B = -10 mA I_C = -10 A, I_B = -0.1 mA		$V_{CE(sat)}$		-2.0 -3.0	V
Base-Emitter Voltage Non-saturated V_{CE} = -3.0 V, I_C = -5.0 A V_{CE} = -3.0 V, I_C = -10 A		$V_{BE(on)}$		-2.8 -4.5	V
DYNAMIC CHARACTERISTICS					
Magnitude of Common Emitter Small-Signal Short-Circuit Forward Current Transfer Ratio I_C = -1.0 A, V_{CE} = -5.0 V, f = 1.0 MHz		$\|h_{fe}\|$	30	400	
Output Capacitance V_{CB} = -10 V, I_E = 0, 100 kHz ≤ f ≤ 1 MHz		C_{obo}		300	pF

©2013 Microsemi Corporation

ELECTRICAL CHARACTERISTICS @ T_C = 25 °C unless otherwise noted. (continued)

SWITCHING CHARACTERISTICS

Turn-On Time V_{CC} = -30 V, I_C = -5.0 A; I_B= -20 mA	t_{on}		2.5	µs
Turn-Off Time V_{CC} = -30 V, I_C = -5.0 A; I_{B1}= I_{B2} = -20 mA	t_{off}		10	µs

SAFE OPERATING AREA (See Figures 1 and 2 and MIL-STD-750,Test Method 3053)

DC Tests

T_C = +25 °C, t = 1 second, 1 Cycle

Test 1

V_{CE} = -8.5 V, I_C = -10 A

Test 2

V_{CE} = -25 V, I_C = -3.4 A

Test 3

V_{CE} = -40 V, I_C = -0.9 A (2N6648)

V_{CE} = -60 V, I_C = -0.3 A (2N6649)

V_{CE} = -80 V, I_C = -0.14 A (2N6650)

©2013 Microsemi Corporation

SAFE OPERATING AREA

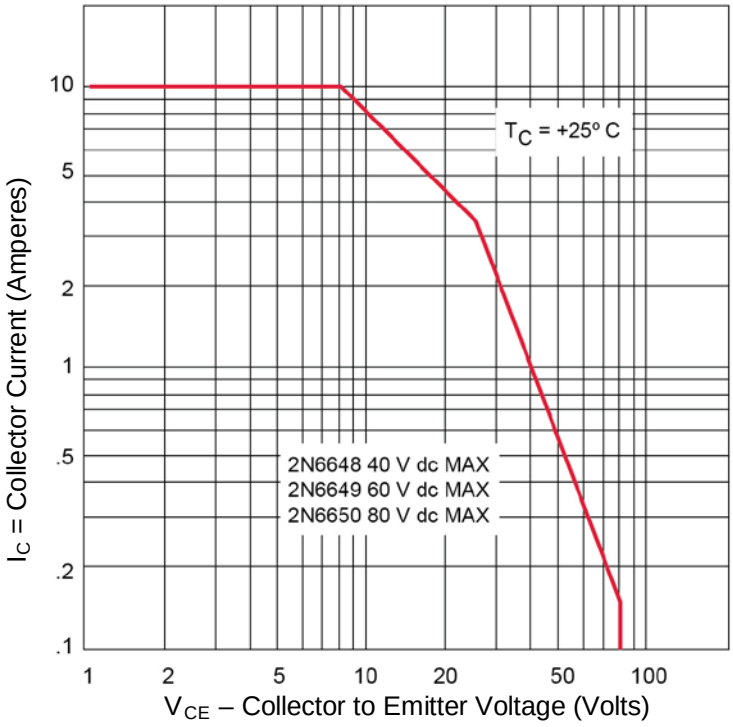

FIGURE 1
Maximum Safe Operating Graph (continuous dc)

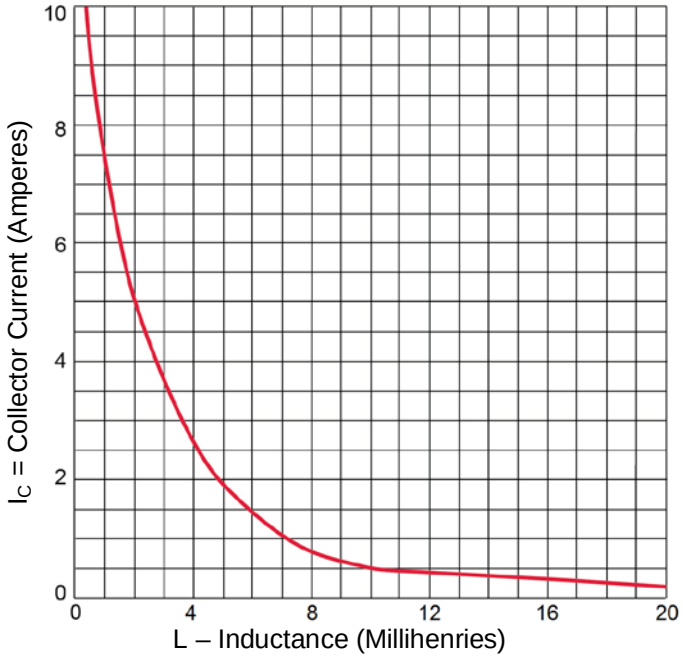

FIGURE 2
Safe Operating Area for Switching Between Saturation and Cutoff (unclamped inductive load)

©2013 Microsemi Corporation

PACKAGE DIMENSIONS

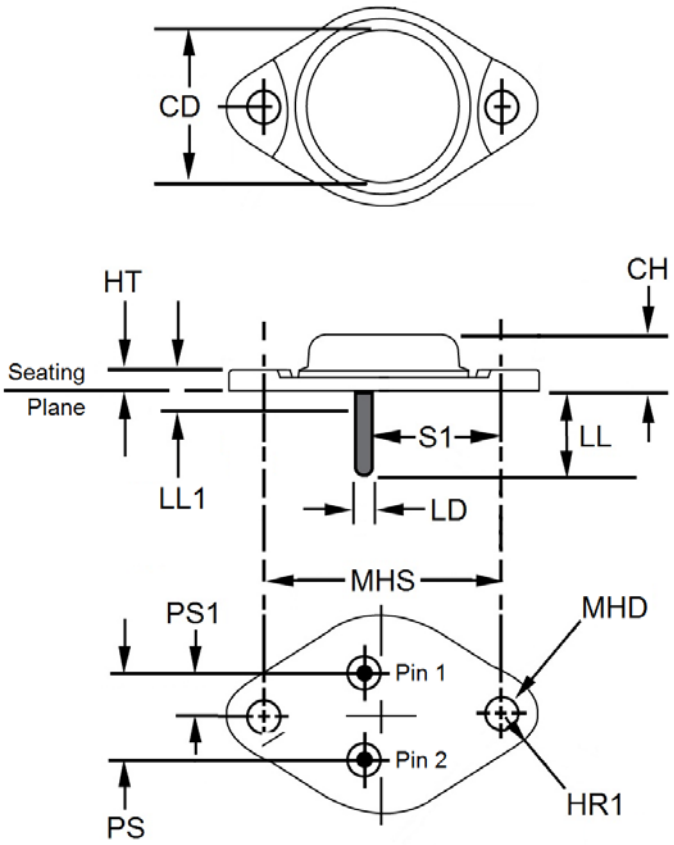

Ltr	Dimensions				Notes
	Inches		Millimeters		
	Min	Max	Min	Max	
CD	-	0.875	-	22.23	
CH	0.250	0.450	6.35	11.43	
HR	0.495	0.525	12.57	13.34	
HR1	0.131	0.188	3.33	4.78	
HT	0.050	0.135	1.52	3.43	
LD	0.038	0.043	0.97	1.09	
LL	0.312	0.500	7.92	12.70	
LL1	-	0.050	-	1.27	
MHD	0.151	0.161	3.84	4.09	
MHS	1.177	1.197	29.90	30.40	
PS	0.420	0.440	10.67	11.18	3
PS1	0.205	0.225	5.21	5.72	3
S1	0.655	0.675	16.64	17.15	

NOTES:

1. Dimensions are in inches.
2. Millimeters are given for information only.
3. These dimensions should be measured at points 0.050 inch (1.27 mm) and 0.055 inch (1.40 mm) below seating plane. When gauge is not used measurement will be made at the seating plane.
4. The seating plane of the header shall be flat within 0.001 inch (0.03 mm) concave to 0.004 inch (0.10 mm) convex inside a 0.930 inch (23.62 mm) diameter circle on the center of the header and flat within 0.001 inch (0.03 mm) concave to 0.006 inch (0.15 mm) convex overall.
5. Mounting holes shall be deburred on the seating plane side.
6. Collector is electrically connected to the case.
7. In accordance with AMSE Y14.5M, diameters are equivalent to Φx symbology.

See schematic on next page

©2013 Microsemi Corporation

SCHEMATIC

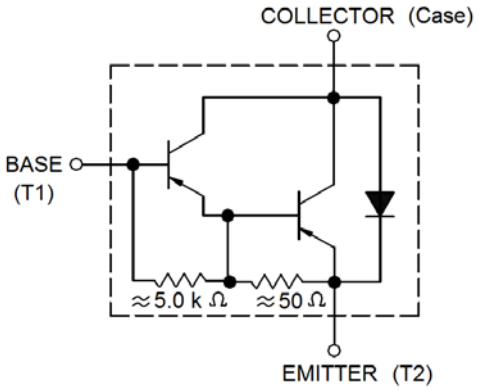

©2013 Microsemi Corporation