LX1552/3/4/5

ULTRA-LOW START-UP CURRENT, CURRENT-MODE PWM

PRODUCTION DATA SHEET

DESCRIPTION

The LX155x family of ultra-low start-up current (250µA max), current mode control ICs offer new levels of energy efficiency for offline converter applications. They are ideally optimized for personal computer and CRT power supplies although they can be used in any number of off-line applications where energy efficiency is critical. Coupled with the fact that the LX155x series requires a minimal set of external components, the series offers an excellent value for cost conscious consumer applications.

Optimizing energy efficiency, the LX155x series demonstrates a significant power reduction as compared with other similar off-line controllers. Table 1 compares the SG384x, UC384xA and the LX155x start-up resistor power dissipation. The LX155x offers an overall 4X reduction in power dissipation.

Additionally, the precise oscillator discharge current gives the power supply designer considerable flexibility in optimizing system duty cycle consistency.

The current mode architecture demonstrates improved load regulation, pulse by pulse current limiting and inherent protection of the power supply output switch. The LX155x includes a bandgap reference trimmed to 1%, an error amplifier, a current sense comparator internally clamped to 1V, a high current totem pole output stage for fast switching of power MOSFETs, and an externally programmable oscillator to set operating frequency and maximum duty cycle. The under voltage lock-out circuitry is designed to operate with as little as 250µA of supply current permitting very efficient bootstrap designs.

IMPORTANT: For the most current data, consult *MICROSEMI*'s website: **http://www.microsemi.com**

KEY FEATURES

- Ultra-Low Start-up Current (150µA Typical)
- Trimmed Oscillator Discharge Current (±2% Typical)
- Initial Oscillator Frequency Better Than ±4%
- Output Pulldown During UVLO
- Precision 2.5V Reference (±2 maximum)
- Current Sense Delay to Output (150ns Typical)
- Automatic Feed Forward Compensation
- Pulse-by-Pulse Current Limiting
- Enhanced Load response Characteristics
- Under-Voltage Lockout with Hysteresis
- Double Pulse Suppression
- High Current Totem Pole Output (±1A Peak)
- 500KHz Operation

PRODUCT HIGHLIGHT

Typical Application of LX155x Using Its MicroPower Start-Up Feature

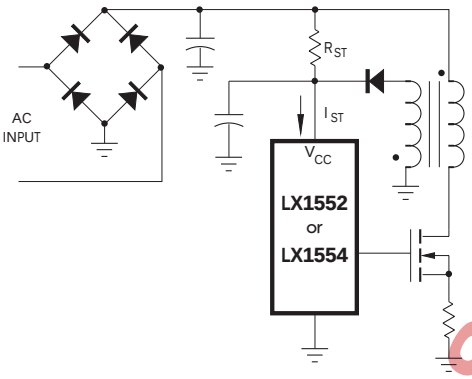

Design Using	SG384x	UC384xA	LX155x
Max. Start-up Current Specification (I_{ST})	1000µA	500µA	**250µA**
Typical Start-up Resistor Value (R_{ST})	62KΩ	124KΩ	**248KΩ**
Max. Start-up Resistor Power Dissipation (P_R)	2.26W	1.13W	**0.56W**

Note: Calculation is done for universal AC input specification of $V_{ACMIN} = 90V_{RMS}$ to $V_{ACMAX} = 256V_{RMS}$ using the following equation: (resistor current is selected to be 2 * I_{ST} @ V_{ACMIN})

$$R_{ST} = \frac{V_{ACMIN}}{\sqrt{2} \bullet I_{ST}}, P_R = \frac{2V_{AC^2MAX}}{R_{ST}}$$

APPLICATIONS

- Economy Off-Line Flyback or Forward Converters
- DC-DC Buck or Boost Converters
- Low Cost DC Motor Control

Available Options Per part#

Part #	Start-Up Voltage	Hysteresis	Max. Duty Cycle
LX1552	16V	6V	<100%
LX1553	8.4V	0.8V	<100%
LX1554	16V	6V	<50%
LX1555	8.4V	0.8V	<50%

OBSOLETE PRODUCT
NOT RECOMMENDED FOR NEW DESIGNS

PACKAGE ORDER INFO

T_A (°C)	**M** Plastic DIP 8-Pin RoHS Compliant / Pb-free Transition DC: 0503	**DM** Plastic SOIC 8-Pin RoHS Compliant / Pb-free Transition DC: 0440	**D** Plastic SOIC 14-Pin RoHS Compliant / Pb-free Transition DC: 0440	**Y** Ceramic DIP 8-Pin	**PW** Plastic TSSOP 20-Pin RoHS Compliant / Pb-free Transition DC: 0442
0 to 70	**LX155xCM**	**LX155xCDM**	**LX155xCD**	-	**LX155xCPW**
-40 to 85	**LX155xIM**	**LX155xIDM**	**LX155xID**	-	-
-55 to 125	-	-	-	**LX155xMY**	-

Note: Available in Tape & Reel. Append the letters "TR" to the part number (i.e. LX1552CDM-TR).

Copyright © 1994
Rev. 1.0b,2005-03-01

ULTRA-LOW START-UP CURRENT, CURRENT-MODE PWM

PRODUCTION DATA SHEET

OBSOLETE PRODUCT
NOT RECOMMENDED FOR NEW DESIGNS

ABSOLUTE MAXIMUM RATINGS (Note 1)

Supply Voltage (Low Impedance Source) 30V
Supply Voltage (I_{CC} < 30mA) ..... Self Limiting
Output Current ..... ±1A
Output Energy (Capacitive Load) 5µJ
Analog Inputs (Pins 2, 3) ..... -0.3V to +6.3V
Error Amp Output Sink Current 10mA
Power Dissipation at T_A = 25°C (DIL-8) 1W
Operating Junction Temperature
  Ceramic (Y Package) ..... 150°C
  Plastic (M, DM, D, PW Packages) ..... 150°C
Storage Temperature Range ..... -65°C to +150°C
Lead Temperature (Soldering, 10 Seconds) ..... 300°C
Pb-free / RoHS Peak Package Solder Reflow Temp. (40 second max. exposure)..... 260°C (+0, -5)

Note 1. Exceeding these ratings could cause damage to the device. All voltages are with respect to Ground. Currents are positive into, negative out of the specified terminal. Pin numbers refer to DIL packages only.

THERMAL DATA

M PACKAGE:

THERMAL RESISTANCE-JUNCTION TO AMBIENT, θ_{JA}	95°C/W

DM PACKAGE:

THERMAL RESISTANCE-JUNCTION TO AMBIENT, θ_{JA}	165°C/W

D PACKAGE:

THERMAL RESISTANCE-JUNCTION TO AMBIENT, θ_{JA}	120°C/W

Y PACKAGE:

THERMAL RESISTANCE-JUNCTION TO AMBIENT, θ_{JA}	130°C/W

PW PACKAGE:

THERMAL RESISTANCE-JUNCTION TO AMBIENT, θ_{JA}	144°C/W

Junction Temperature Calculation: $T_J = T_A + (P_D \times \theta_{JA})$.
The θ_{JA} numbers are guidelines for the thermal performance of the device/pc-board system.
All of the above assume no ambient airflow.

PACKAGE PIN OUTS

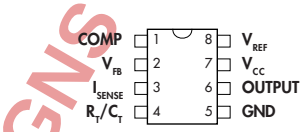

M & Y PACKAGE
(Top View)
M Package RoHS / Pb-free 100% Matte Tin Lead Finish

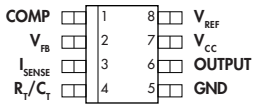

DM PACKAGE
(Top View)
RoHS / Pb-free 100% Matte Tin Lead Finish

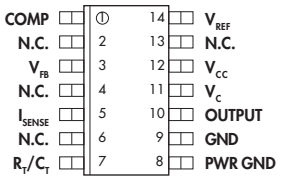

D PACKAGE
(Top View)
RoHS / Pb-free 100% Matte Tin Lead Finish

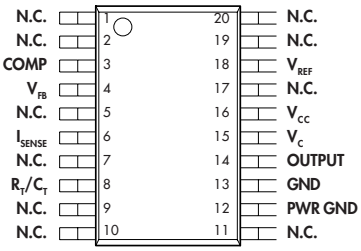

PW PACKAGE
(Top View)
RoHS / Pb-free 100% Matte Tin Lead Finish

LINFINITY MICROELECTRONICS

Copyright © 1994

ELECTRICAL CHARACTERISTICS

(Unless otherwise specified, these specifications apply over the operating ambient temperatures for LX155xC with $0°C \le T_A \le 70°C$, LX155xI with $-40°C \le T_A \le 85°C$, LX155xM with $-55°C \le T_A \le 125°C$; V_{CC}=15V (Note 5); R_T=10K; C_T=3.3nF. Low duty cycle pulse testing techniques are used which maintains junction and case temperatures equal to the ambient temperature.)

Parameter	Symbol	Test Conditions	LX155xI/155xM			LX155xC			Units
			Min.	Typ.	Max.	Min.	Typ.	Max.	
Reference Section									
Output Voltage	V_{REF}	T_A = 25°C, I_L = 1mA	4.95	5.00	5.05	4.95	5.00	5.05	V
Line Regulation		$12 \le V_{IN} \le 25V$		6	20		6	20	mV
Load Regulation		$1 \le I_O \le 20mA$		6	25		6	25	mV
Temperature Stability (Note 2 & 7)				0.2	0.4		0.2	0.4	mV/°C
Total Output Variation		Over Line, Load, and Temperature	4.9		5.1	4.9		5.1	V
Output Noise Voltage (Note 2)	V_N	$10Hz \le f \le 10kHz$, T_A = 25°C		50			50		µV
Long Term Stability (Note 2)		T_A = 125°C, t = 1000hrs		5	25		5	25	mV
Output Short Circuit	I_{SC}		-30	-100	-180	-30	-100	-180	mA
Oscillator Section									
Initial Accuracy (Note 6)		T_A = 25°C	48.5	50.5	52.5	48.5	50.5	52.5	kHz
		T_A = 25°C, R_T = 698Ω, C_T = 22nF, LX1552/3 only	56	58	60	56	58	60	kHz
Voltage Stability		$12 \le V_{CC} \le 25V$		0.2	1		0.2	1	%
Temperature Stability (Note 2)		$T_{MIN} \le T_A \le T_{MAX}$		5			5		%
Amplitude (Note 2)		$V_{PIN\ 4}$ peak to peak		1.7			1.7		V
Discharge Current	I_D	T_A = 25°C, $V_{PIN\ 4}$ = 2V	8.0	8.3	8.6	8.0	8.3	8.6	mA
		$V_{PIN\ 4}$ = 2V, $T_{MIN} \le T_A \le T_{MAX}$	7.6		8.8	7.8		8.8	mA
Error Amp Section									
Input Voltage		$V_{PIN\ 1}$ = 2.5V	2.45	2.50	2.55	2.45	2.50	2.55	V
Input Bias Current	I_B			-0.1	-1		-0.1	-0.5	µA
Open Loop Gain	A_{VOL}	$2 \le V_O \le 4V$	65	90		65	90		dB
Unity Gain Bandwidth (Note 2)	UGBW	T_A = 25°C		0.6			0.6		MHz
Power Supply Rejection Ratio (Note 3)	PSRR	$12 \le V_{CC} \le 25V$	60	70		60	70		dB
Output Sink Current	I_{OL}	$V_{PIN\ 2}$ = 2.7V, $V_{PIN\ 1}$ = 1.1V	2	4		2	4		mA
Output Source Current	I_{OH}	$V_{PIN\ 2}$ = 2.3V, $V_{PIN\ 1}$ = 5V	-0.5	-0.8		-0.5	-0.8		mA
Output Voltage High Level	V_{OH}	$V_{PIN\ 2}$ = 2.3V, R_L = 15K to ground	5	6.5		5	6.5		V
Output Voltage Low Level	V_{OL}	$V_{PIN\ 2}$ = 2.7V, R_L = 15K to V_{REF}		0.7	1.1		0.7	1.1	V
Current Sense Section									
Gain (Note 3 & 4)	A_{VOL}		2.85	3	3.15	2.85	3	3.15	V/V
Maximum Input Signal (Note 3)		$V_{PIN\ 1}$ = 5V	0.9	1	1.1	0.9	1	1.1	V
Power Supply Rejection Ratio (Note 3)	PSRR	$12 \le V_{CC} \le 25V$		70			70		dB
Input Bias Current	I_B			-2	-10		**-2**	**-5**	µA
Delay to Output (Note 2)	T_{PD}	$V_{PIN\ 3}$ = 0 to 2V		150	300		150	300	ns
Output Section									
Output Voltage Low Level	V_{OL}	I_{SINK} = 20mA		0.1	0.4		0.1	0.4	V
		I_{SINK} = 200mA		1.5	2.2		1.5	2.2	V
Output Voltage High Level	V_{OH}	I_{SOURCE} = 20mA	13	13.5		13	13.5		V
		I_{SOURCE} = 200mA	12	13.5		12	13.5		V
Rise Time (Note 2)	T_R	T_A = 25°C, C_L = 1nF		50	100		50	100	ns
Fall Time (Note 2)	T_F	T_A = 25°C, C_L = 1nF		50	100		50	100	ns
UVLO Saturation	V_{SAT}	V_{CC} = 5V, I_{SINK} = 10mA		0.7	1.2		0.7	1.2	V

(Electrical Characteristics continue next page.)

OBSOLETE PRODUCT
NOT RECOMMENDED FOR NEW DESIGNS

Copyright © 1994
Rev. 1.0b

ELECTRICAL CHARACTERISTICS (Con't.)

Parameter	Symbol	Test Conditions	LX155xI/155xM			LX155xC			Units
			Min.	Typ.	Max.	Min.	Typ.	Max.	
Under-Voltage Lockout Section									
Start Threshold	V_{ST}	1552/1554	15	16	17	15	16	17	V
		1553/1555	7.8	8.4	9.0	7.8	8.4	9.0	V
Min. Operation Voltage After Turn-On		1552/1554	9	10	11	9	10	11	V
		1553/1555	7.0	7.6	8.2	7.0	7.6	8.2	V
PWM Section									
Maximum Duty Cycle		1552/1553	94	96		94	96		%
		1552/1553, R_T = 698Ω, C_T = 22nF		50			50		%
		1554/1555	47	48		47	48		%
Minimum Duty Cycle					0			0	%
Power Consumption Section									
Start-Up Current	I_{ST}			150	250		150	250	µA
Operating Supply Current	I_{CC}			11	17		11	17	mA
V_{CC} Zener Voltage	V_Z	I_{CC} = 25mA	30	35		30	35		V

Notes: 2. These parameters, although guaranteed, are not 100% tested in production.

3. Parameter measured at trip point of latch with V_{FB} = 0.

4. Gain defined as: $A = \frac{\Delta V_{COMP}}{\Delta V_{ISENSE}}$; $0 \le V_{ISENSE} \le 0.8V$.

5. Adjust V_{CC} above the start threshold before setting at 15V.

6. Output frequency equals oscillator frequency for the LX1552 and LX1553. Output frequency is one half oscillator frequency for the LX1554 and LX1555.

7. Temperature stability, sometimes referred to as average temperature coefficient, is described by the equation:

$$\text{Temp Stability} = \frac{V_{REF}\text{ (max.)} - V_{REF}\text{ (min.)}}{T_A\text{ (max.)} - T_A\text{ (min.)}}$$

V_{REF} (max.) & V_{REF} (min.) are the maximum & minimum reference voltage measured over the appropriate temperature range. Note that the extremes in voltage do not necessarily occur at the extremes in temperature.

OBSOLETE PRODUCT
NOT RECOMMENDED FOR NEW DESIGN

BLOCK DIAGRAM

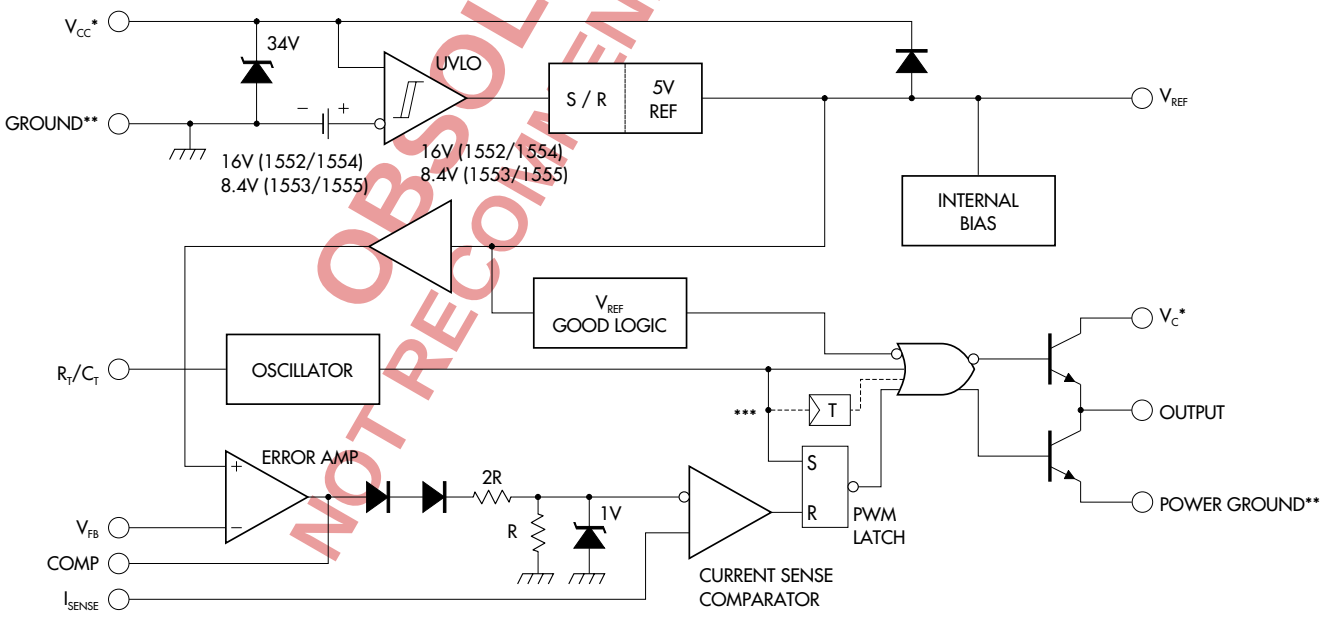

* - V_{CC} and V_C are internally connected for 8 pin packages.

** - POWER GROUND and GROUND are internally connected for 8 pin packages.

*** - Toggle flip flop used only in 1554 and 1555.

LINFINITY MICROELECTRONICS

Copyright © 1994
Rev. 1.0b

GRAPH / CURVE INDEX

Characteristic Curves

FIGURE #

1. OSCILLATOR FREQUENCY vs. TIMING RESISTOR
2. MAXIMUM DUTY CYCLE vs. TIMING RESISTOR
3. OSCILLATOR DISCHARGE CURRENT vs. TEMPERATURE
4. OSCILLATOR FREQUENCY vs. TEMPERATURE
5. OUTPUT INITIAL ACCURACY vs. TEMPERATURE
6. OUTPUT DUTY CYCLE vs. TEMPERATURE
7. REFERENCE VOLTAGE vs. TEMPERATURE
8. REFERENCE SHORT CIRCUIT CURRENT vs. TEMPERATURE
9. E.A. INPUT VOLTAGE vs. TEMPERATURE
10. START-UP CURRENT vs. TEMPERATURE
11. START-UP CURRENT vs. SUPPLY VOLTAGE
12. START-UP CURRENT vs. SUPPLY VOLTAGE
13. DYNAMIC SUPPLY CURRENT vs. OSCILLATOR FREQUENCY
14. CURRENT SENSE DELAY TO OUTPUT vs. TEMPERATURE
15. CURRENT SENSE THRESHOLD vs. ERROR AMPLIFIER OUTPUT
16. START-UP THRESHOLD vs. TEMPERATURE
17. START-UP THRESHOLD vs. TEMPERATURE
18. MINIMUM OPERATING VOLTAGE vs. TEMPERATURE
19. MINIMUM OPERATING VOLTAGE vs. TEMPERATURE
20. LOW LEVEL OUTPUT SATURATION VOLTAGE DURING UNDER-VOLTAGE LOCKOUT
21. OUTPUT SATURATION VOLTAGE vs. OUTPUT CURRENT and TEMPERATURE
22. OUTPUT SATURATION VOLTAGE vs. OUTPUT CURRENT and TEMPERATURE

FIGURE INDEX

Theory of Operation Section

FIGURE #

23. TYPICAL APPLICATION OF START-UP CIRCUITRY
24. REFERENCE VOLTAGE vs. TEMPERATURE
25. SIMPLIFIED SCHEMATIC OF OSCILLATOR SECTION
26. DUTY CYCLE VARIATION vs. DISCHARGE CURRENT
27. OSCILLATOR FREQUENCY vs. TIMING RESISTOR
28. MAXIMUM DUTY CYCLE vs. TIMING RESISTOR
29. CURRENT SENSE THRESHOLD vs. ERROR AMPLIFIER OUTPUT

Typical Applications Section

FIGURE #

30. CURRENT SENSE SPIKE SUPPRESSION
31. MOSFET PARASITIC OSCILLATIONS
32. ADJUSTABLE BUFFERED REDUCTION OF CLAMP LEVEL WITH SOFT-START
33. EXTERNAL DUTY CYCLE CLAMP AND MULTI-UNIT SYCHRONIZATION
34. SLOPE COMPENSATION
35. OPEN LOOP LABORATORY FIXTURE
36. OFF-LINE FLYBACK REGULATOR

OBSOLETE PRODUCT
NOT RECOMMENDED FOR NEW DESIGNS

Copyright © 1994
Rev. 1.0b

CHARACTERISTIC CURVES

FIGURE 1. — OSCILLATOR FREQUENCY vs. TIMING RESISTOR

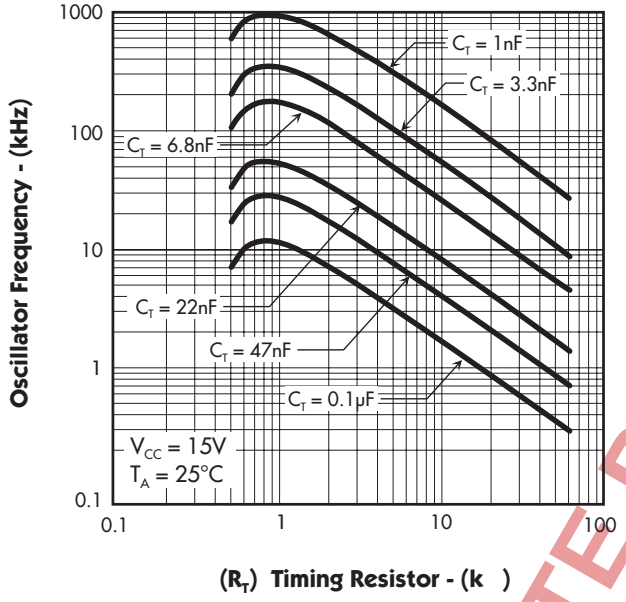

FIGURE 2. — MAXIMUM DUTY CYCLE vs. TIMING RESISTOR

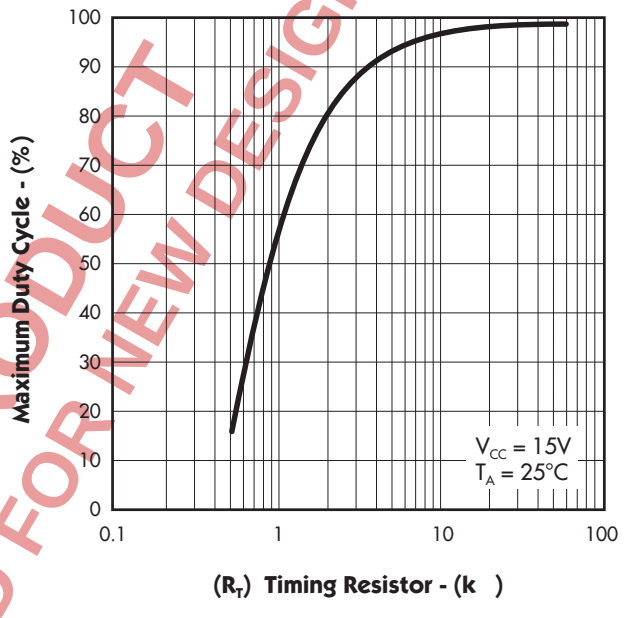

FIGURE 3. — OSCILLATOR DISCHARGE CURRENT vs. TEMPERATURE

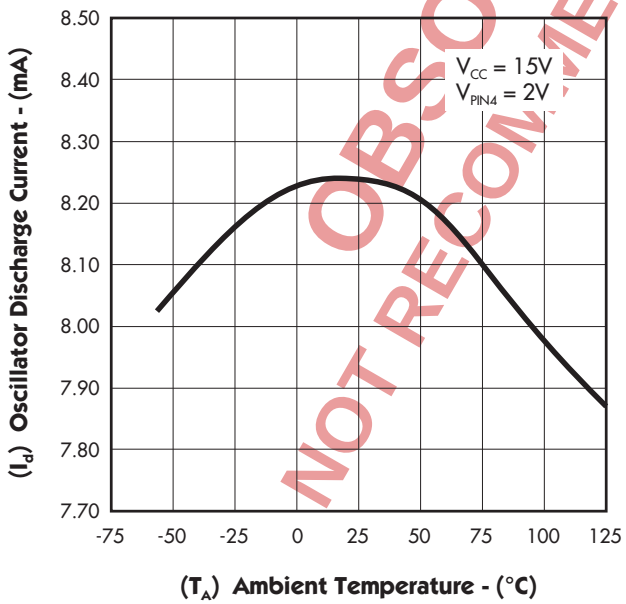

FIGURE 4. — OSCILLATOR FREQUENCY vs. TEMPERATURE

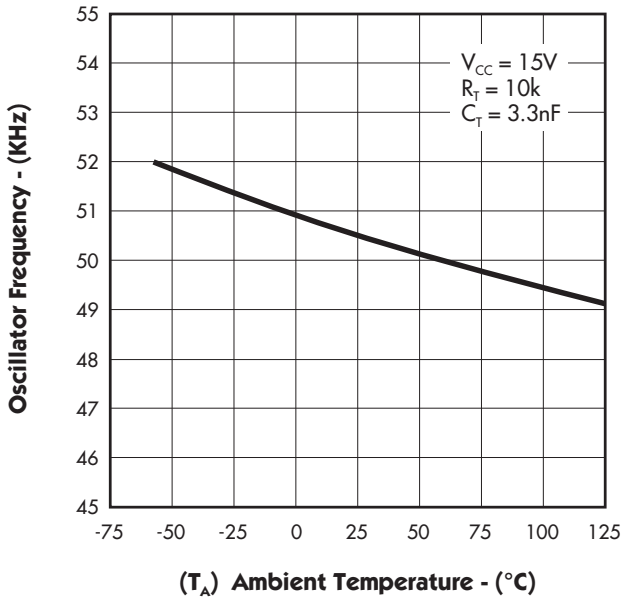

OBSOLETE PRODUCT
NOT RECOMMENDED FOR NEW DESIGNS

LINFINITY MICROELECTRONICS

Copyright © 1994
Rev. 1.0b

CHARACTERISTIC CURVES

FIGURE 5. — OUTPUT INITIAL ACCURACY vs. TEMPERATURE

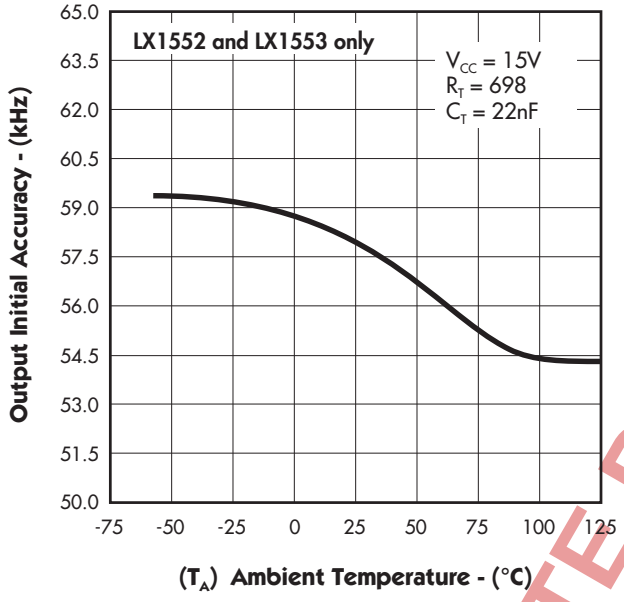

FIGURE 6. — OUTPUT DUTY CYCLE vs. TEMPERATURE

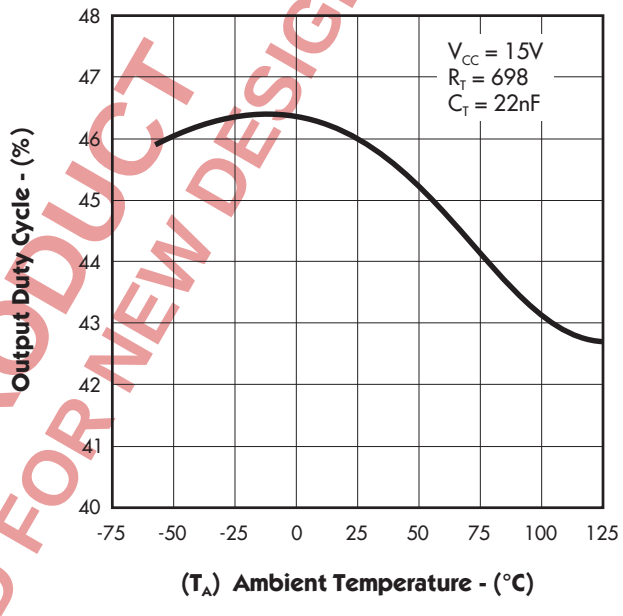

FIGURE 7. — REFERENCE VOLTAGE vs. TEMPERATURE

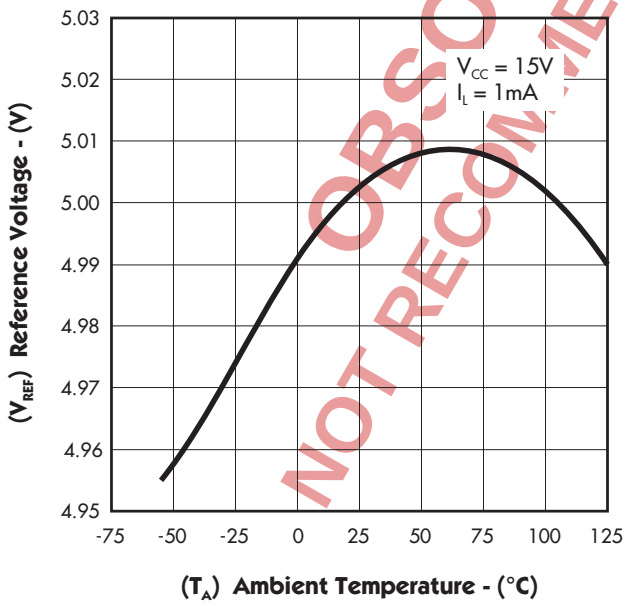

FIGURE 8. — REFERENCE SHORT CIRCUIT CURRENT vs. TEMPERATURE

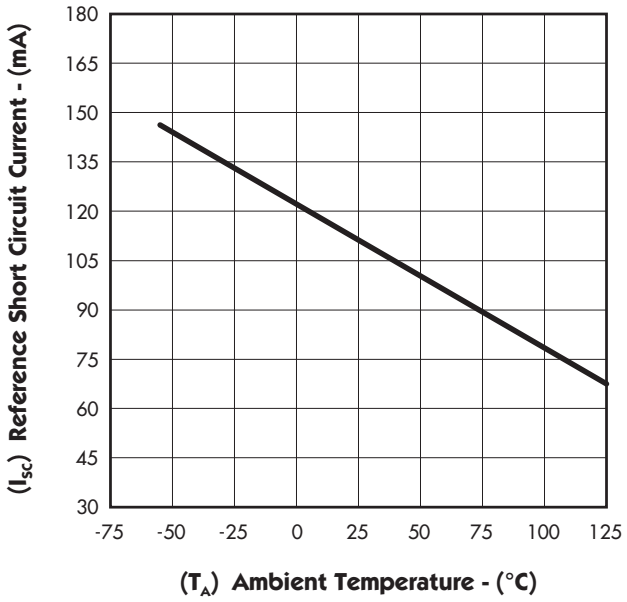

OBSOLETE PRODUCT
NOT RECOMMENDED FOR NEW DESIGNS

Copyright © 1994
Rev. 1.0b

CHARACTERISTIC CURVES

FIGURE 9. — E.A. INPUT VOLTAGE vs. TEMPERATURE

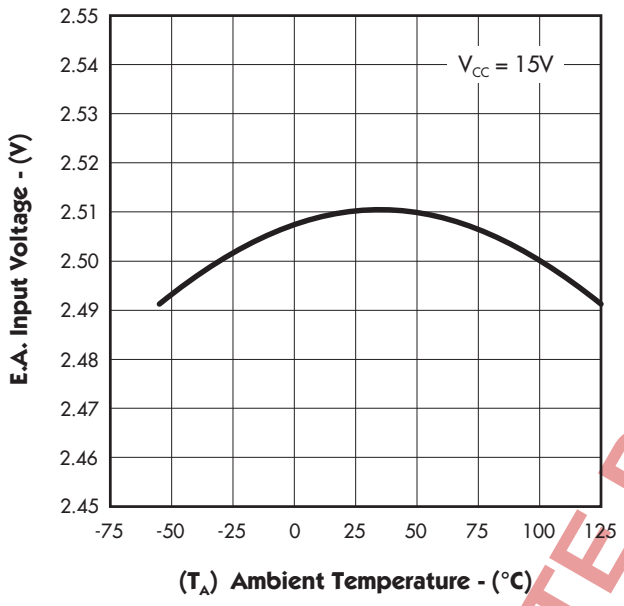

FIGURE 10. — START-UP CURRENT vs. TEMPERATURE

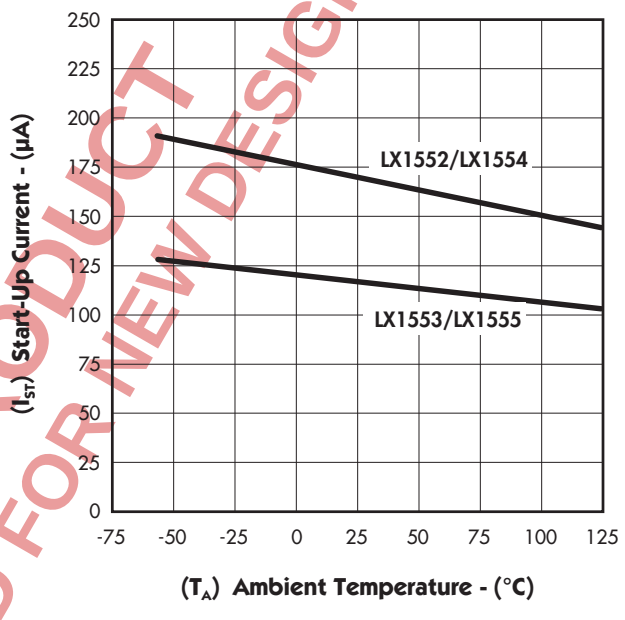

FIGURE 11. — START-UP CURRENT vs. SUPPLY VOLTAGE

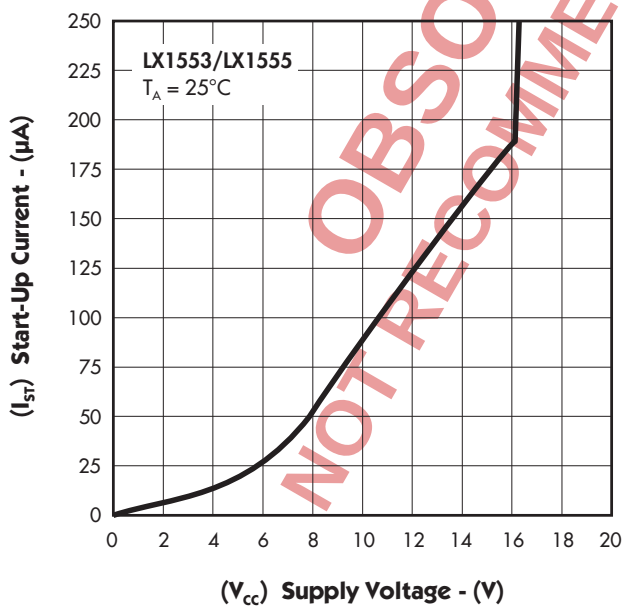

FIGURE 12. — START-UP CURRENT vs. SUPPLY VOLTAGE

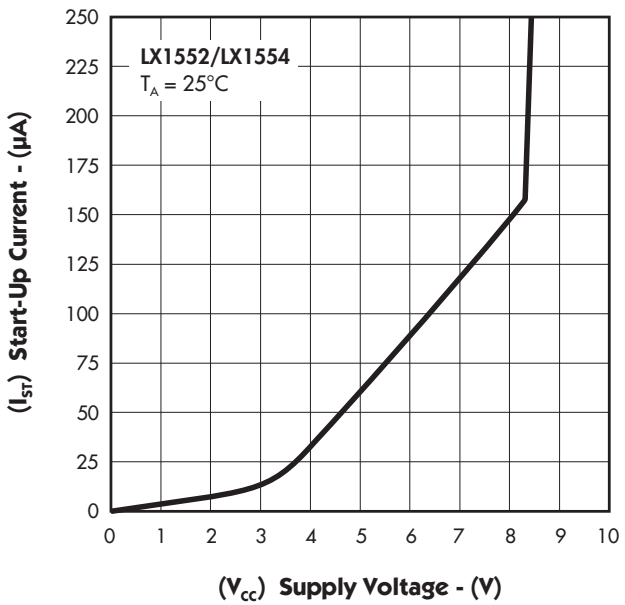

OBSOLETE PRODUCT
NOT RECOMMENDED FOR NEW DESIGNS

LINFINITY MICROELECTRONICS

Copyright © 1994
Rev. 1.0b

CHARACTERISTIC CURVES

FIGURE 13. — DYNAMIC SUPPLY CURRENT vs. OSCILLATOR FREQUENCY

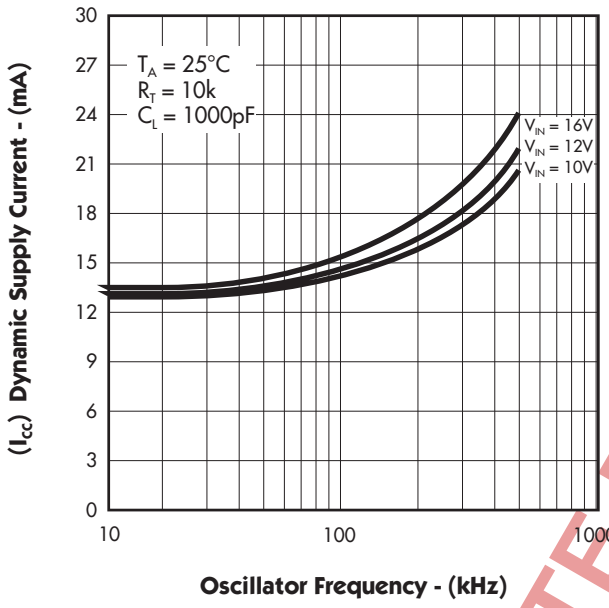

FIGURE 14. — CURRENT SENSE DELAY TO OUTPUT vs. TEMPERATURE

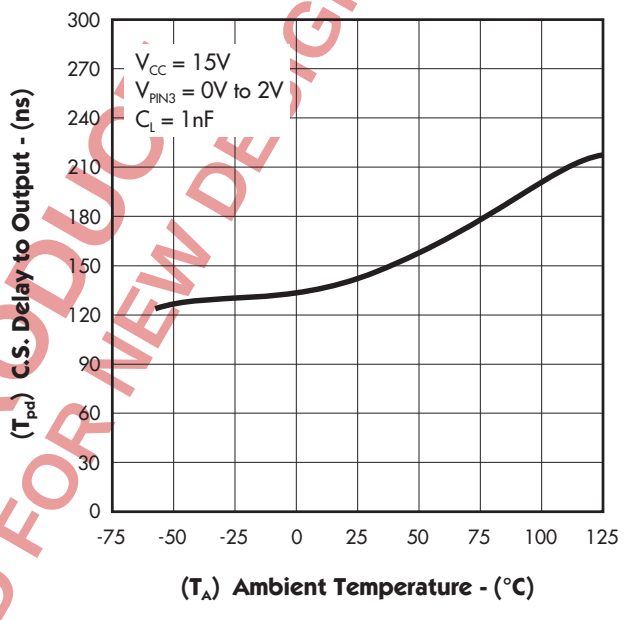

FIGURE 15. — CURRENT SENSE THRESHOLD vs. ERROR AMPLIFIER OUTPUT

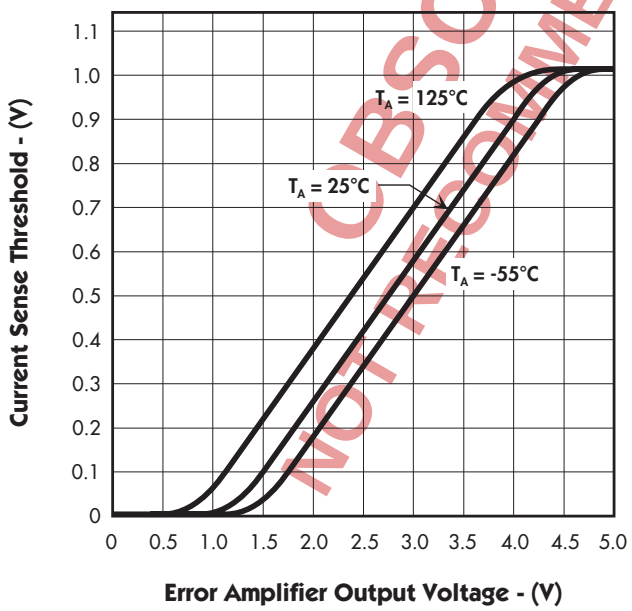

FIGURE 16. — START-UP THRESHOLD vs. TEMPERATURE

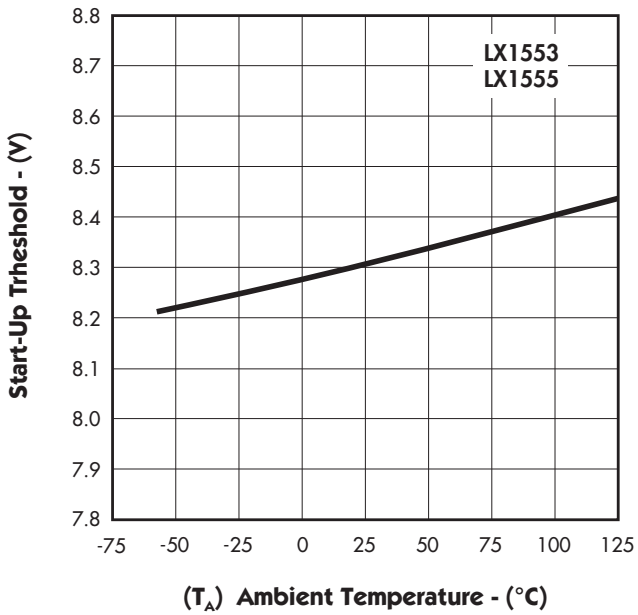

OBSOLETE PRODUCT
NOT RECOMMENDED FOR NEW DESIGNS

Copyright © 1994
Rev. 1.0b

CHARACTERISTIC CURVES

FIGURE 17. — START-UP THRESHOLD vs. TEMPERATURE

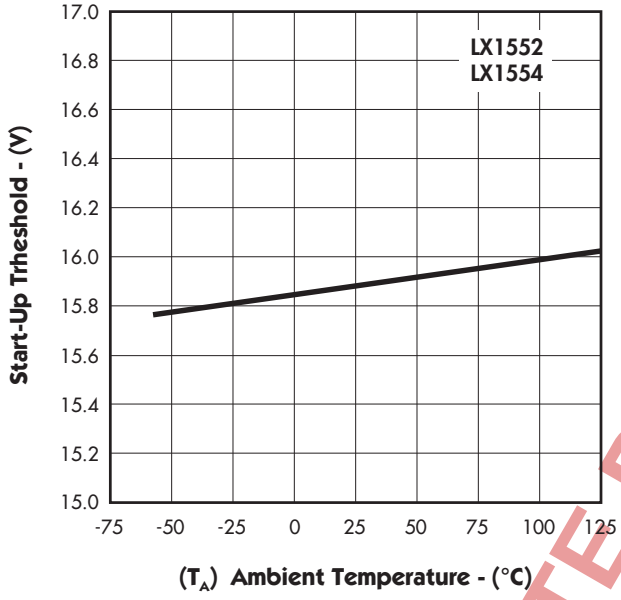

FIGURE 18. — MINIMUM OPERATING VOLTAGE vs. TEMPERATURE

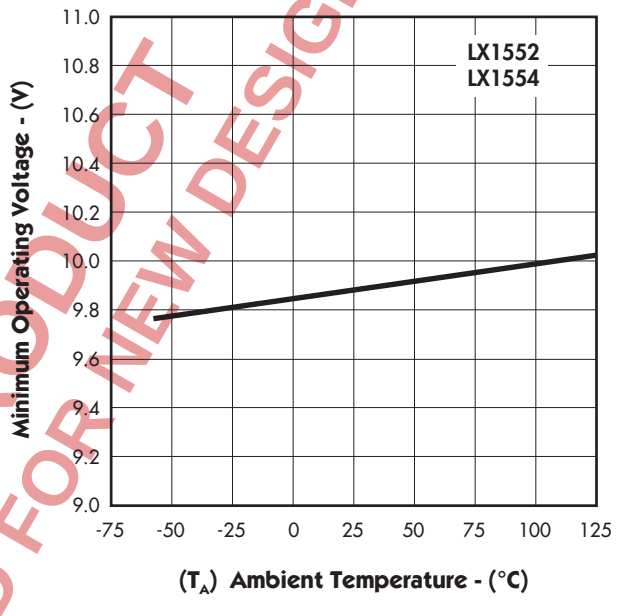

FIGURE 19. — MINIMUM OPERATING VOLTAGE vs. TEMPERATURE

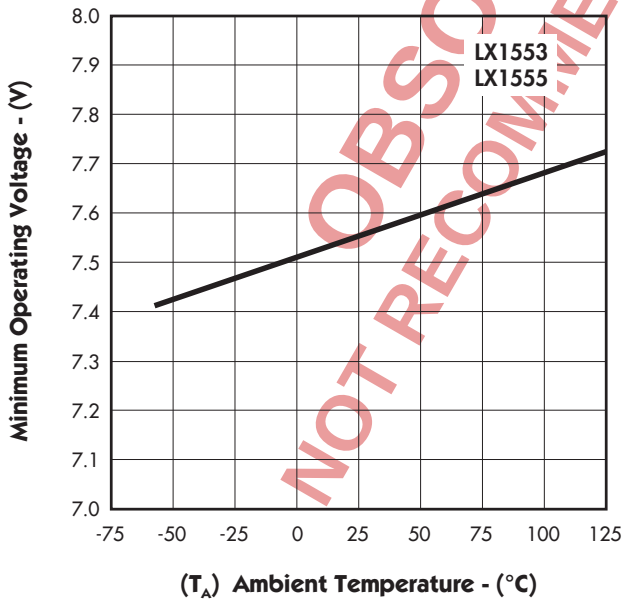

FIGURE 20. — LOW LEVEL OUTPUT SATURATION VOLTAGE DURING UNDER-VOLTAGE LOCKOUT

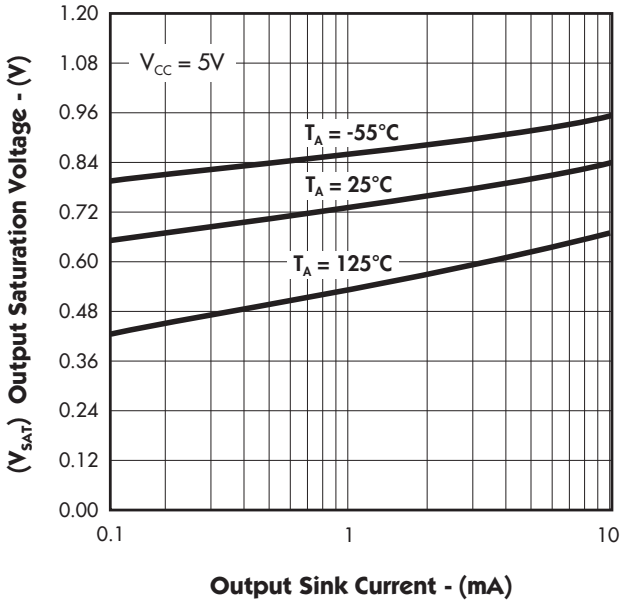

OBSOLETE PRODUCT
NOT RECOMMENDED FOR NEW DESIGNS

LINFINITY MICROELECTRONICS

Copyright © 1994
Rev. 1.0b

CHARACTERISTIC CURVES

FIGURE 21. — OUTPUT SATURATION VOLTAGE vs. OUTPUT CURRENT and TEMPERATURE

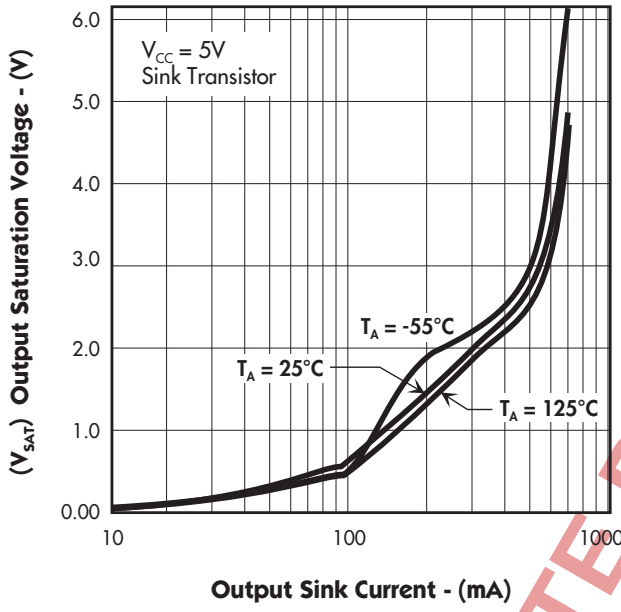

FIGURE 22. — OUTPUT SATURATION VOLTAGE vs. OUTPUT CURRENT and TEMPERATURE

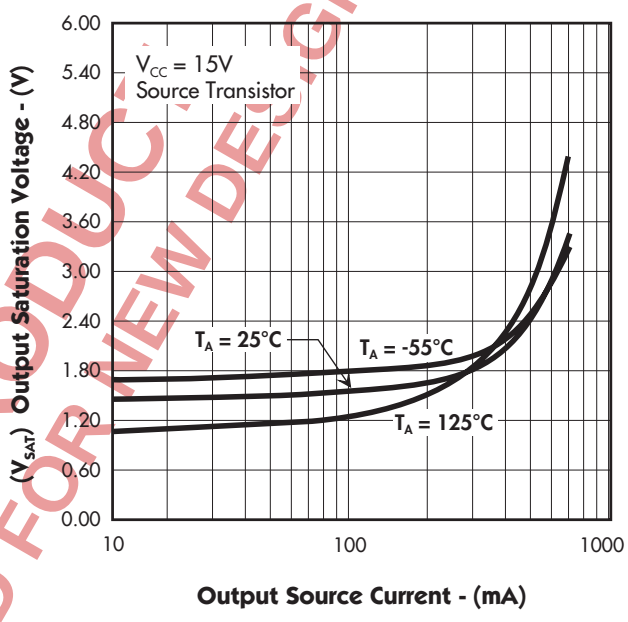

OBSOLETE PRODUCT
NOT RECOMMENDED FOR NEW DESIGNS

Copyright © 1994
Rev. 1.0b

THEORY OF OPERATION

IC DESCRIPTION

The LX1552/3/4/5 series of current mode PWM controller IC's are designed to offer substantial improvements in the areas of start-up current and oscillator accuracy when compared to the first generation products, the UC184x series. While they can be used in most DC-DC applications, they are optimized for single-ended designs such as Flyback and Forward converters. The LX1552/54 series are best suited for off-line applications, whereas the 1553/55 series are mostly used in power supplies with low input voltages. The IC can be divided into six main sections as shown in the Block Diagram (page 4): undervoltage lockout and start-up circuit; voltage reference; oscillator; current sense comparator and PWM latch; error amplifier; and the output stage. The operation of each section is described in the following sections. The differences between the members of this family are summarized in Table 1.

TABLE 1

PART #	UVLO		MAXIMUM DUTY CYCLE
	Start-up Voltage (V_{ST})	Hysterises Voltage (V_{HYS})	
LX1552	16V	6V	<100%
LX1553	8.4V	0.8V	<100%
LX1554	16V	6V	<50%
LX1555	8.4V	0.8V	<50%

UNDERVOLTAGE LOCKOUT

The LX155x undervoltage lock-out is designed to maintain an ultra low quiescent current of less than 250µA, while guaranteeing the IC is fully functional before the output stage is activated. Comparing this to the SG384x series, a 4x reduction in start-up current is achieved resulting in 75% less power dissipation in the start-up resistor. This is especially important in off-line power supplies which are designed to operate for universal input voltages of 90 to 265V AC.

Figure 23 shows an efficient supply voltage using the ultra low start-up current of the LX1554 in conjunction with a bootstrap winding off of the power transformer. Circuit operation is as follows.

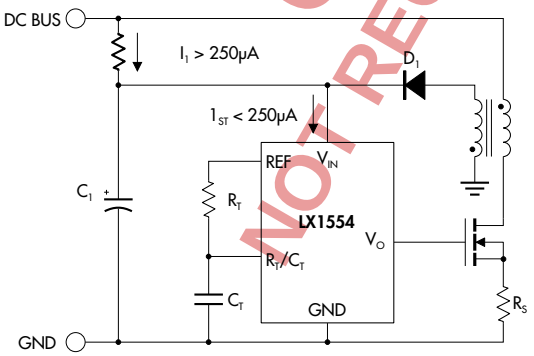

FIGURE 23 — TYPICAL APPLICATION OF START-UP CIRCUITRY

The start-up capacitor (C1) is charged by current through resistor (R1) minus the start-up current. Resistor (R1) is designed such that it provides more than 250µA of current (typically 2x $I_{ST(max)}$). Once this voltage reaches the start-up threshold, the IC turns on, starting the switching cycle. This causes an increase in IC operating current, resulting in discharging the start-up capacitor. During this time, the auxiliary winding flyback voltage gets rectified & filtered via (D1) and (C1) and provides sufficient voltage to continue to operate the IC and support its required supply current. The start-up capacitor must be large enough such that during the discharge period, the bootsrap voltage exceeds the shutdown threshold of the IC.

Table 2 below shows a comparison of start-up resistor power dissipation vs. maximum start-up current for different devices.

TABLE 2

Design Using	SG384x	UC384xA	LX155x
Max. Start-up Current Specification (I_{ST})	1000µA	500µA	250µA
Typical Start-Up Resistor Value (R_{ST})	62KΩ	124KΩ	248KΩ
Max. Start-Up Resistor Power Dissipation (P_R)	2.26W	1.13W	0.56W

(Resistor R1 is designed such that it provides 2X maximum start-up current under low line conditions. Maximum power dissipation is calculated under maximum line conditions. Example assumes 90 to 265VAC universal input application.)

OBSOLETE PRODUCT
NOT RECOMMENDED FOR NEW DESIGNS

LINFINITY MICROELECTRONICS

Copyright © 1994
Rev. 1.0b

THEORY OF OPERATION

VOLTAGE REFERENCE

The voltage reference is a low drift bandgap design which provides +5.0V to supply charging current to the oscillator timing capacitor, as well as supporting internal circuitries. Initial accuracy for all devices are specified at ±1% max., which is a 2x improvement for the commercial product when compared to the SG384x series. The reference is capable of providing in excess of 20mA for powering any external control circuitries and has built-in short circuit protection.

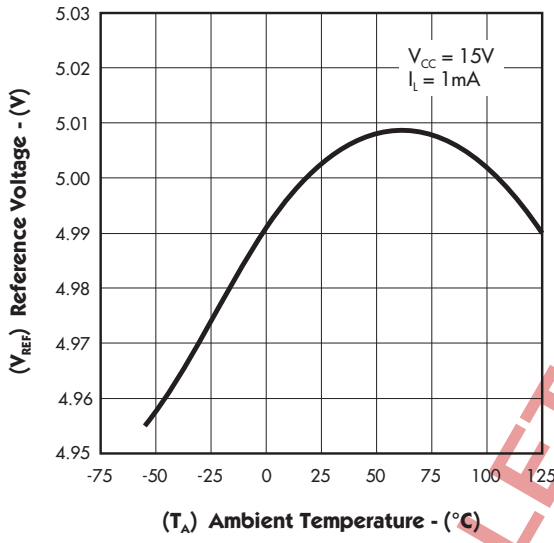

FIGURE 24 — REFERENCE VOLTAGE vs. TEMPERATURE

OSCILLATOR

The oscillator circuit is designed such that discharge current and valley voltage are trimmed independently. This results in more accurate initial oscillator frequency and maximum output duty cycle, especially important in LX1552/53 applications. The oscillator is programmed by the values selected for the timing components (R_T) and (C_T). A simplified schematic of the oscillator is shown in Figure 25. The operation is as follows; Capacitor (C_T) is charged from the 5V reference thru resistor (R_T) to a peak voltage of 2.7V nominally. Once the voltage reaches this threshold, comparator (A1) changes state, causing (S1) to switch to position (2) and (S2) to (V_V) position. This will allow the capacitor to discharge with a current equal to the difference between a constant discharge current (I_D) and current through charging resistor (I_R), until the voltage drops down to 1V nominally and the comparator changes state again, repeating the cycle. Oscillator charge time results in the output to be in a high state (on time) and discharge time sets it to a low state (off time). Since the oscillator period is the sum of the charge and discharge time, any variations in either of them will ultimately affect stability of the output frequency and the maximum duty cycle. In fact, this

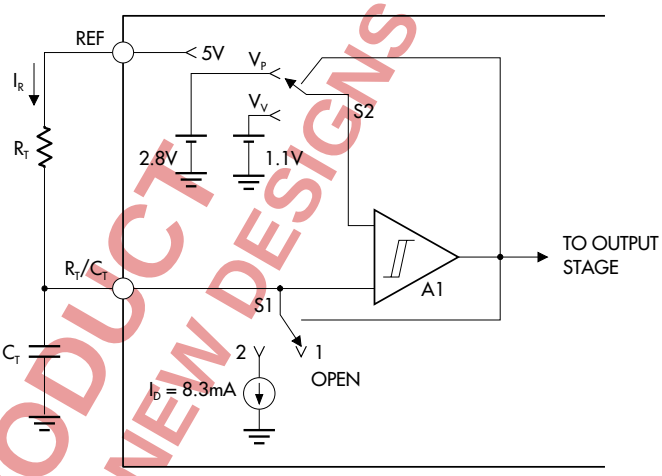

FIGURE 25 — SIMPLIFIED SCHEMATIC OF OSCILLATOR SECTION

variation is more pronounced when maximum duty cycle has to be limited to 50% or less. This is due to the fact that for longer output off time, capacitor discharge current (I_D - I_R) must be decreased by increasing I_R. Consequently, this increases the sensitivity of the frequency and duty cycle to any small variations of the internal current source (I_D), making this parameter more critical under those conditions. Because this is a desired feature in many applications, this parameter is trimmed to a nominal current value of 8.3±0.3mA at room temperature, and guaranteed to a maximum range of 7.8 to 8.8mA over the specified ambient temperature range. Figure 26 shows variation of oscillator duty cycle versus discharge current for LX155x and SG384x series devices.

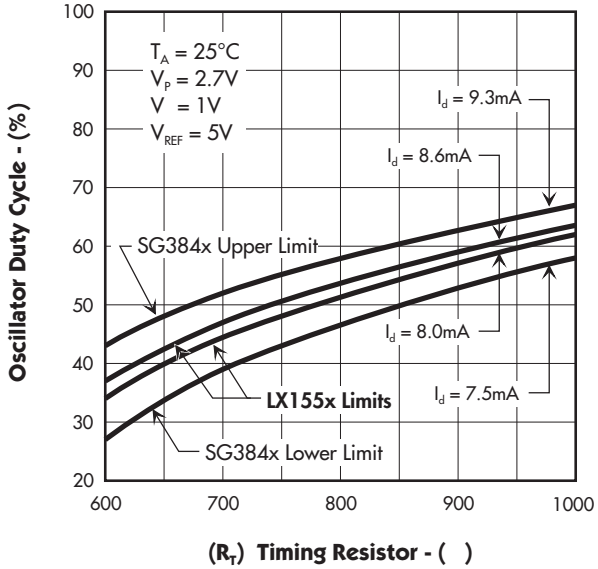

FIGURE 26 — DUTY CYCLE VARIATION vs. DISCHARGE CURRENT

OBSOLETE PRODUCT
NOT RECOMMENDED FOR NEW DESIGNS

Copyright © 1994
Rev. 1.0b

THEORY OF OPERATION

OSCILLATOR (continued)

The oscillator is designed such that many values of R_T and C_T will give the same frequency, but only one combination will yield a specific duty cycle at a given frequency. A set of charts as well as the timing equations are given to determine approximate values of timing components for a given frequency and duty cycle.

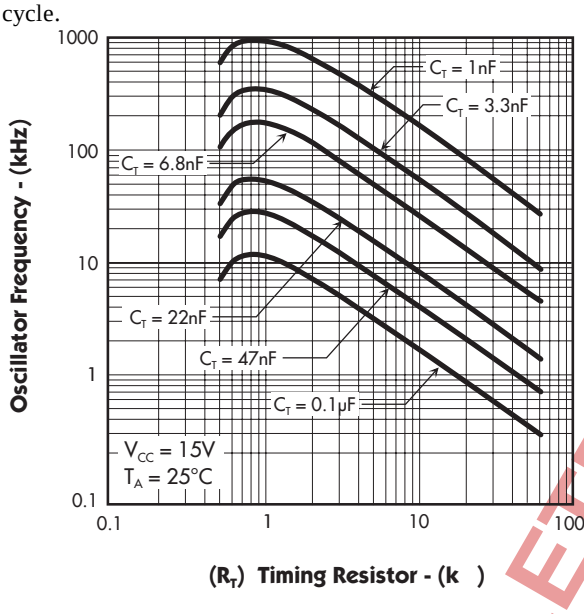

FIGURE 27 — OSCILLATOR FREQUENCY vs. TIMING RESISTOR

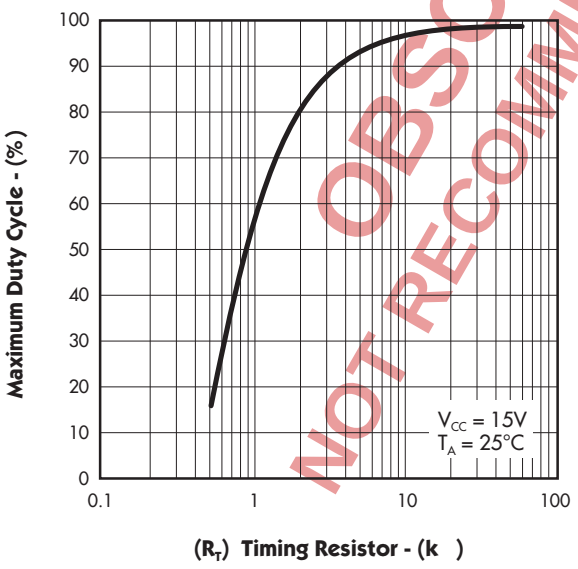

FIGURE 28 — MAXIMUM DUTY CYCLE vs. TIMING RESISTOR

Given: frequency ≅ f; maximum duty-cycle ≅ Dm
Calculate:

1) $$R_T = 277 \left[\frac{(1.74)^{\frac{1}{Dm}} - 1}{(1.74)^{\frac{1-Dm}{Dm}} - 1} \right] \ (\Omega), \quad 0.3 \le Dm \le 0.95$$

Note: R_T must always be greater than 520Ω for proper operation of oscillator circuit.

2) $$C_T = \frac{1.81 * Dm}{f * R_T} \ (\mu f)$$

for duty cycles above 95% use:

3) $$f \approx \frac{1.81}{R_T C_T} \quad \text{where } R_T \ge 5k\Omega$$

Example: A flyback power supply design requires the duty cycle to be limited to less than 45%. If the output switching frequency is selected to be 100kHz, what are the values of R_T and C_T for the **a) LX1552/53**, and the **b) LX1554/55** ?

a) LX1552/53

Given: f = 100kHz
Dm = 0.45

$$R_T = 267 \left[\frac{(1.74)^{\frac{1}{.45}} - 1}{(1.74)^{\frac{.55}{.45}} - 1} \right] = 669\Omega$$

$$C_T = \frac{1.81 * 0.45}{100x10^3 * 669} = .012 \ \mu f$$

b) LX1554/55

f_{OUT} = ½ f_{OSC} (due to internal flip flop)
f_{OSC} = 200kHz

select C_T = 1000pf
using Figure 27 or Equation 3: R_T = 9.1k

OBSOLETE PRODUCT
NOT RECOMMENDED FOR NEW DESIGNS

LINFINITY MICROELECTRONICS

Copyright © 1994
Rev. 1.0b

THEORY OF OPERATION

CURRENT SENSE COMPARATOR AND PWM LATCH

Switch current is sensed by an external sense resistor (or a current transformer), monitored by the C.S. pin and compared internally with voltage from error amplifier output. The comparator output resets the PWM latch ensuring that a single pulse appears at the output for any given oscillator cycle. The LX1554/55 series has an additional flip flop stage that limits the output to less than 50% duty cycle range as well as dividing its output frequency to half of the oscillator frequency. The current sense comparator threshold is internally clamped to 1V nominally which would limit peak switch current to:

$$(1)\ I_{SP} = \frac{V_Z}{R_S}$$ where: $I_{SP} \equiv$ Peak switch current, $V_Z \equiv$ internal zener, $0.9V \le V_Z \le 1.1V$

Equation 1 is used to calculate the value of sense resistor during the current limit condition where switch current reaches its maximum level. In normal operation of the converter, the relationship between peak switch current and error voltage (voltage at pin 1) is given by:

$$(1)\ I_{SP} = \frac{V_E - 2V_F}{3 * R_S}$$ where: $V_E \equiv$ Voltage at pin 1, $V_F \equiv$ Diode - Forward voltage 0.7V at T_A = 25°C

The above equation is plotted in Figure 29. Notice that the gain becomes non-linear above current sense voltages greater than ≈ 0.95 volts. It is therefore recommended to operate below this range during normal operation. This would insure that the overall closed loop gain of the system will not be affected by the change in the gain of the current sense stage.

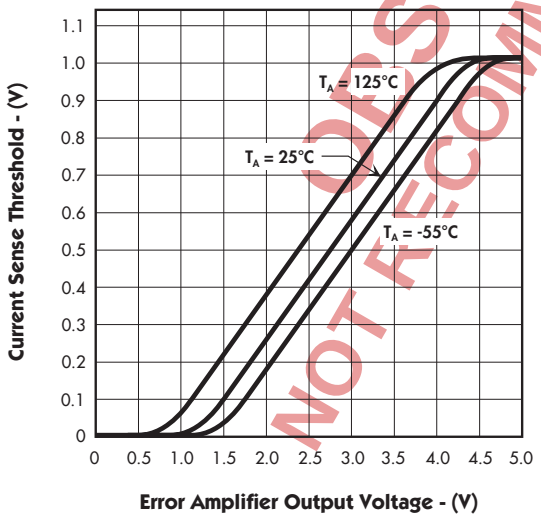

FIGURE 29 — CURRENT SENSE THRESHOLD vs. ERROR AMPLIFIER OUTPUT

ERROR AMPLIFIER

The error amplifier has a PNP input differential stage with access to the Inverting input and the output pin. The N.I. input is internally biased to 2.5 volts and is not available for any external connections. The maximum input bias current for the LX155XC series is 0.5µA, while LX155XI/155XM devices are rated for 1µA maximum over their specified range of ambient temperature. Low value resistor dividers should be used in order to avoid output voltage errors caused by the input bias current. The error amplifier can source 0.5mA and sink 2mA of current. A minimum feedback resistor (R_F) value of is given by:

$$R_{FMIN} = \frac{3(1.1) + 1.8}{0.5mA} \approx 10K$$

OUTPUT STAGE

The output section has been specifically designed for direct drive of power MOSFETs. It has a totempole configuration which is capable of high peak current for fast charging and discharging of external MOSFET gate capacitance. This typically results in a rise and fall time of 50ns for a 1000pf capacitive load. Each output transistor (source and sink) is capable of supplying 200mA of continuous current with typical saturation voltages versus temperature as shown in Figures 21 & 22 of the characteristic curve section. All devices are designed to minimize the amount of shoot-thru current which is a result of momentary overlap of output transistors. This allows more efficient usage of the IC at higher frequencies, as well as improving the noise susceptibility of the device. Internal circuitry insures that the outputs are held off during V_{CC} ramp-up. Figure 20, in the characteristic curves section, shows output sink saturation voltage vs. current at 5V.

OBSOLETE PRODUCT
NOT RECOMMENDED FOR NEW DESIGNS

Copyright © 1994
Rev. 1.0b

TYPICAL APPLICATION CIRCUITS

Unless otherwise specified, pin numbers refer to 8-pin package.

FIGURE 30. — CURRENT SENSE SPIKE SUPPRESSION

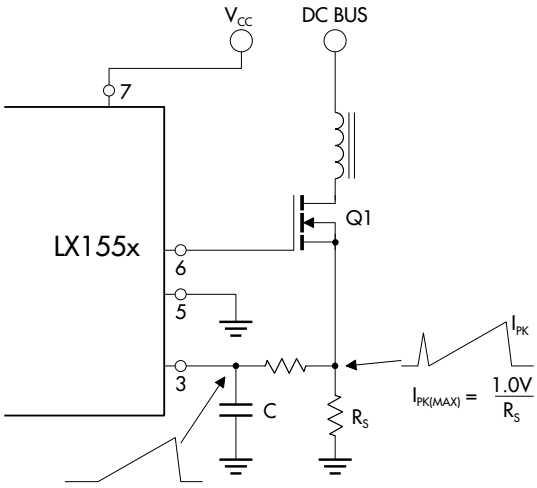

The RC low pass filter will eliminate the leading edge current spike caused by parasitics of Power MOSFET.

FIGURE 31. — MOSFET PARASITIC OSCILLATIONS

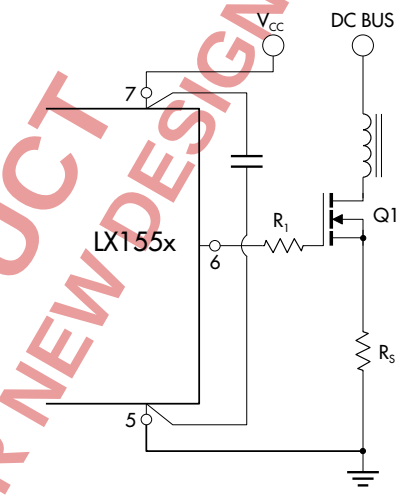

A resistor (R_1) in series with the MOSFET gate reduces overshoot & ringing caused by the MOSFET input capacitance and any inductance in series with the gate drive. (Note: It is very important to have a low inductance ground path to insure correct operation of the I.C. This can be done by making the ground paths as short and as wide as possible.)

FIGURE 32. — ADJUSTABLE BUFFERED REDUCTION OF CLAMP LEVEL WITH SOFT-START

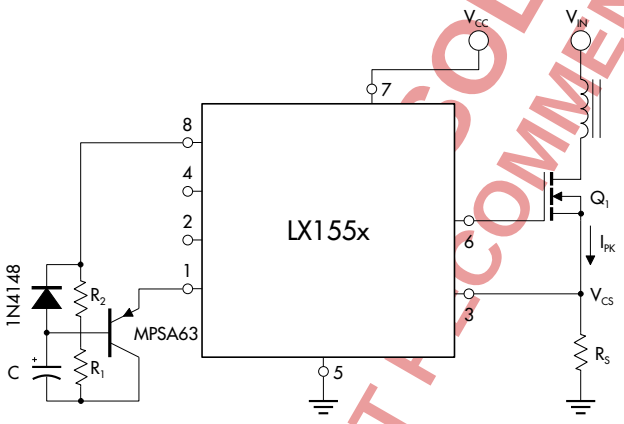

$$I_{PK} = \frac{V_{CS}}{R_S} \quad \text{Where: } V_{CS} = 1.67 \left(\frac{R_1}{R_1+R_2}\right) \text{ and } V_{C.S.MAX} = 1V \text{ (Typ.)}$$

$$t_{SOFTSTART} = -\ln\left[1 - \frac{V_{EAO} - 1.3}{5\left(\frac{R_1}{R_1+R_2}\right)}\right]\left(\frac{R_1 R_2}{R_1+R_2}\right) C$$

where; V_{EAO} ≡ voltage at the Error Amp Output under minimum line and maximum load conditions.

Soft start and adjustable peak current can be done with the external circuitry shown above.

FIGURE 33. — EXTERNAL DUTY CYCLE CLAMP AND MULTI-UNIT SYNCHRONIZATION

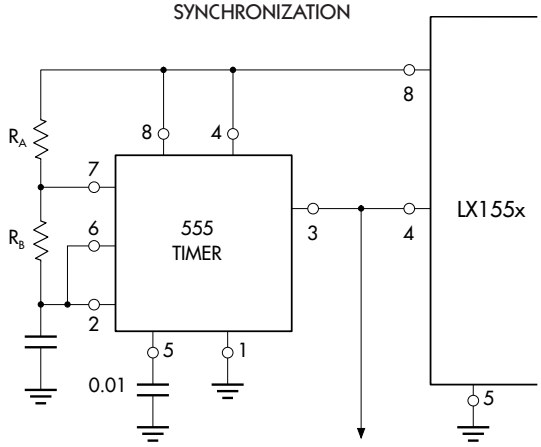

$$f = \frac{1.44}{(R_A + 2R_B)C}$$

$$f = \frac{R_B}{R_A + 2R_B}$$

Precision duty cycle limiting as well as synchronizing several parts is possible with the above circuitry.

OBSOLETE PRODUCT
NOT RECOMMENDED FOR NEW DESIGNS

LINFINITY MICROELECTRONICS

Copyright © 1994
Rev. 1.0b

TYPICAL APPLICATION CIRCUITS (continued)

FIGURE 34. — SLOPE COMPENSATION

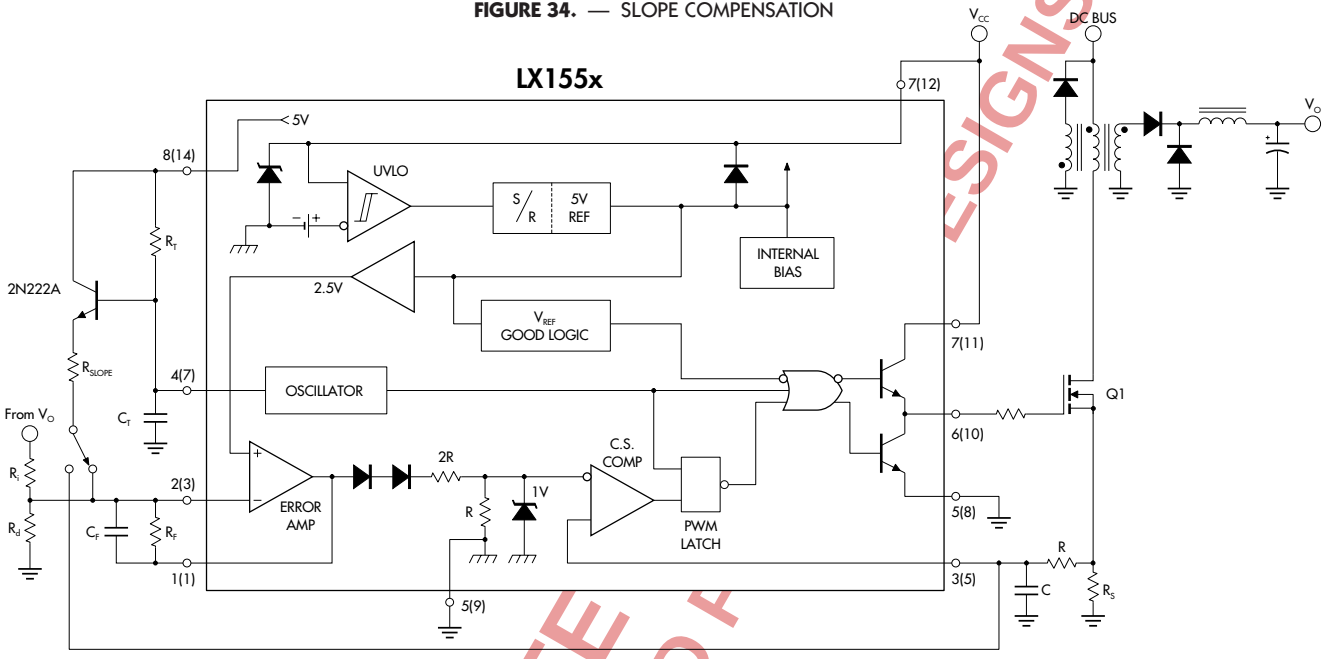

Due to inherent instability of fixed frequency current mode converters running above 50% duty cycle, slope compensation should be added to either the current sense pin or the error amplifier. Figure 34 shows a typical slope compensation technique. Pin numbers inside parenthesis refer to 14-pin package.

FIGURE 35. — OPEN LOOP LABORATORY FIXTURE

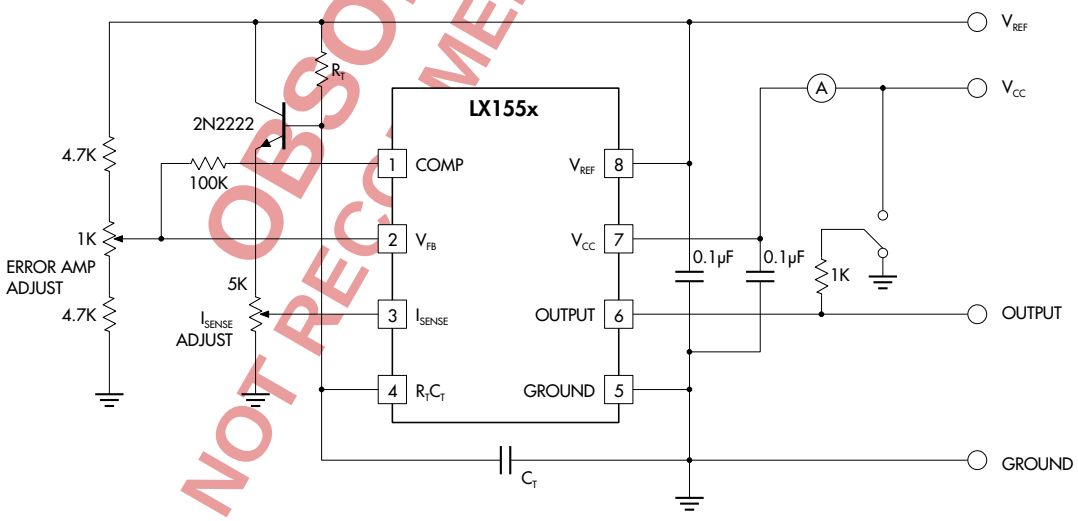

High peak currents associated with capacitive loads necessitate careful grounding techniques. Timing and bypass capacitors should be connected to pin 5 in a single point ground. The transistor and 5k potentiometer are used to sample the oscillator waveform and apply an adjustable ramp to pin 3.

OBSOLETE
NOT RECOMMENDED FOR NEW DESIGNS

Copyright © 1994
Rev. 1.0b

TYPICAL APPLICATION CIRCUITS (continued)

FIGURE 36. — OFF-LINE FLYBACK REGULATOR

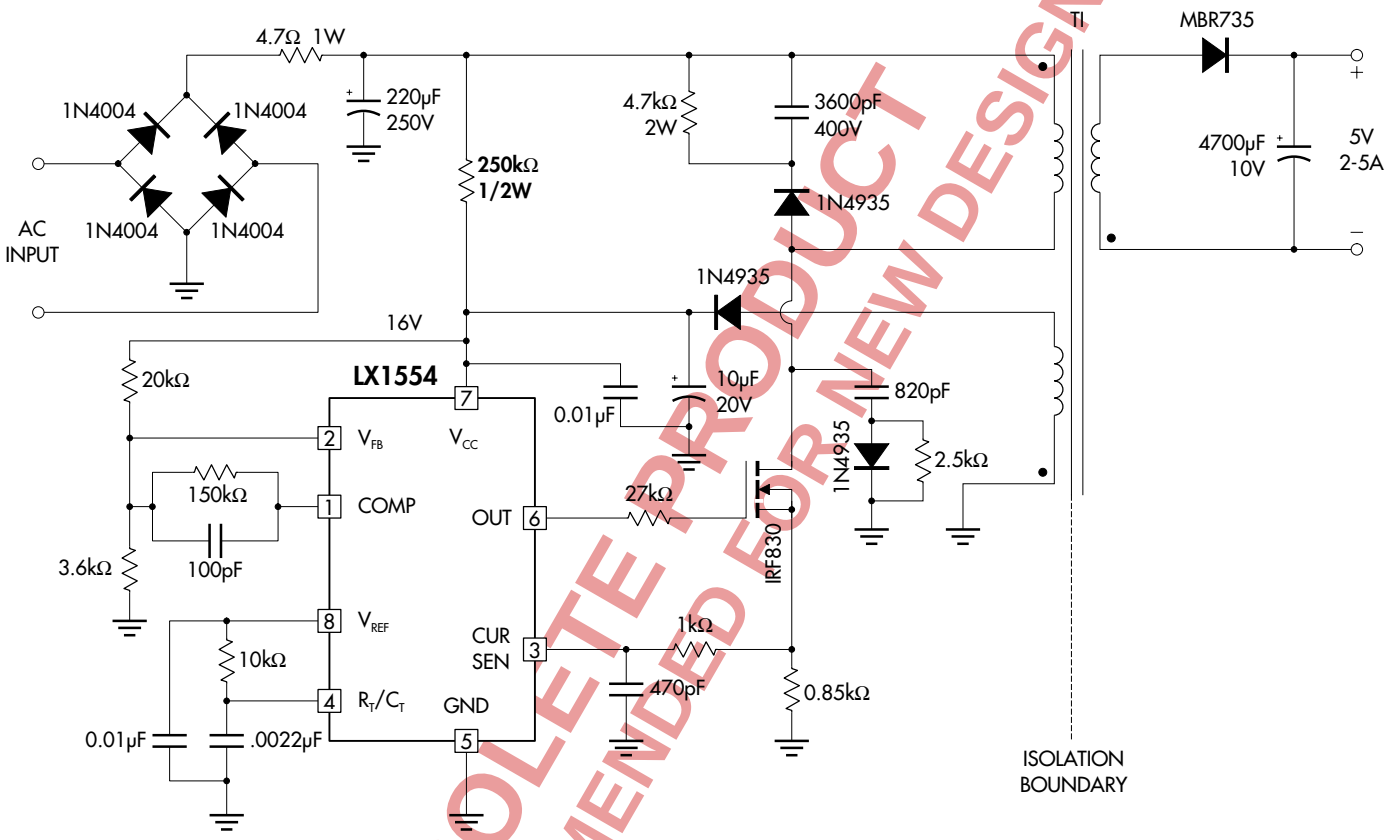

OBSOLETE PRODUCT
NOT RECOMMENDED FOR NEW DESIGNS

SPECIFICATIONS

Input line voltage:	90VAC to 130VAC
Input frequency:	50 or 60Hz
Switching frequency:	40KHz ±10%
Output power:	25W maximum
Output voltage:	5V +5%
Output current:	2 to 5A
Line regulation:	0.01%/V
Load regulation:	8%/A*
Efficiency @ 25 Watts,	
V_{IN} = 90VAC:	70%
V_{IN} = 130VAC:	65%
Output short-circuit current:	2.5Amp average

* This circuit uses a low-cost feedback scheme in which the DC voltage developed from the primary-side control winding is sensed by the LX1554 error amplifier. Load regulation is therefore dependent on the coupling between secondary and control windings, and on transformer leakage inductance.

LINFINITY MICROELECTRONICS

Copyright © 1994
Rev. 1.0b