STRIPLINE SURFACE MOUNT

Bi-Directional Coupler BDCH-35-272+

50Ω 700 to 2700 MHz 35 dB 150W

KEY FEATURES

- High power handling, up to 150W
- Ultra wideband, 700 to 2700 MHz
- Low insertion loss, 0.2 dB



Generic photo used for illustration purposes only

APPLICATIONS

- VHF/UHF high power radio
- Transmission signal monitoring
- Antenna reflection monitoring
- Distributed antenna systems (DAS)
- Wireless transmitters

FUNCTIONAL DIAGRAM

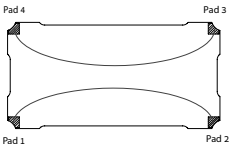

PRODUCT OVERVIEW

Mini-Circuits BDCH-35-272+ high-power bi-directional coupler provides high power handling up to 150W and insertion loss of 0.2 dB Typ. Covering frequencies from 700 to 2700 MHz, it supports a wide variety of applications from military to various cellular base station applications and more.
Excellent return loss at all ports of 23 dB typical provides superb matching over the full frequency range. The coupler is designed into an open printed laminate (1.0 x 0.5 x 0.051") with wrap-around terminations for good solderability and easy visual inspection.

ELECTRICAL SPECIFICATIONS[1,2] AT +25°C

Parameter	Frequency (MHz)	Min.	Typ.	Max.	Units
Frequency Range		700		2700	MHz
Insertion Loss	700-2700	-	0.2	0.3	dB
Coupling Nominal	700-2700	-	35.8±1	-	dB
Coupling Flatness (±)	700-2700	-	±1.1	-	dB
	800-2500	-	±1	-	
Directivity	700-2700	10	16	-	dB
	800-2500	12	18	-	
Return Loss (Input/Output)	700-2700	17	23	-	dB
Return Loss (Coupled Forward/Reverse)	700-2700	17	23	-	dB
Thermal Resistance[3]	700-2700	-	-	0.5	°C/W

1. Tested on Evaluation Board TB-863-1+. De-embedded to the device reference plane.
2. Model is symmetrical and all ports are interchangeable, see Port Function Description/Configuration table for details and S-Parameters for actual performance.
3. Thermal Resistance is defined as, example (Θjc= (Hot Spot Temperature on DUT - Base Plate Temperature)/Input Power)

ABSOLUTE MAXIMUM RATINGS[4]

Operating Case Temperature[5]		-55 °C to +105 °C
Storage Temperature		-55 °C to +105 °C
Power Input	+85 °C case	150 W
	+95 °C case	120 W
	+105 °C case	90 W
DC Current		2.5 A

4. Permanent damage may occur if any of these limits are exceeded.
5. Case temperature is defined as temperature on base plate.

REV. A
ECO-020990
RDF-2148
BDCH-35-272+
MCIL
240226

Bi-Directional Coupler BDCH-35-272+

50Ω 700 to 2700 MHz 35 dB 150W

TYPICAL PERFORMANCE GRAPHS

Note : Data corresponds to Configuration A at +25°C unless specified otherwise.

BDCH-35-272+

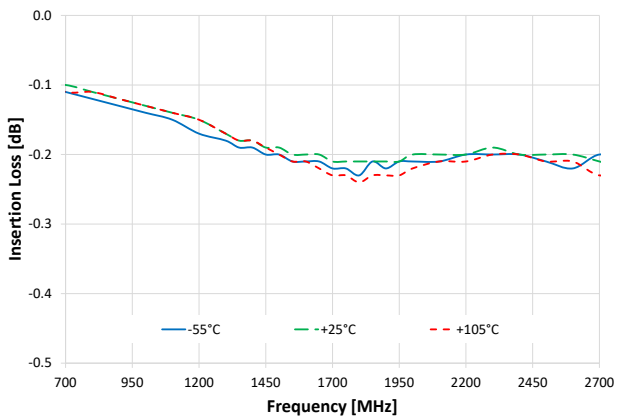

BDCH-35-272+

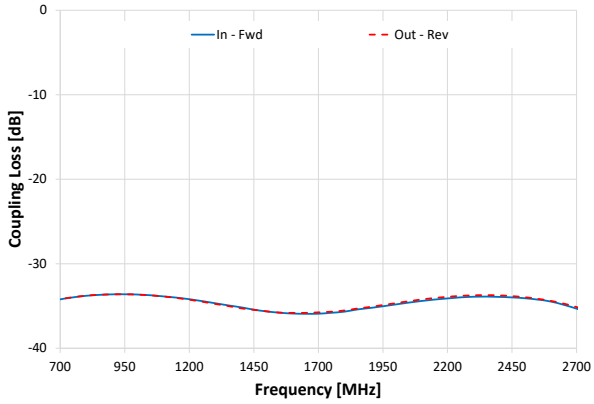

BDCH-35-272+

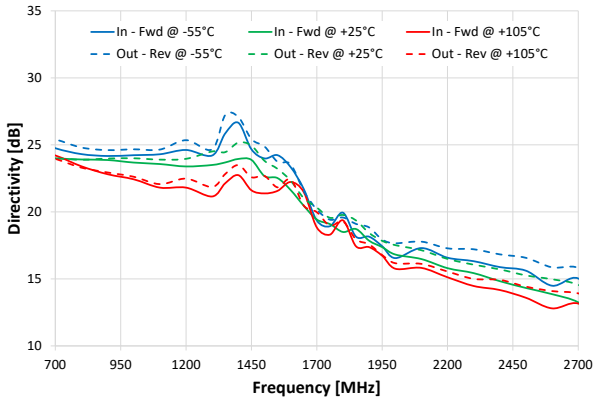

BDCH-35-272+

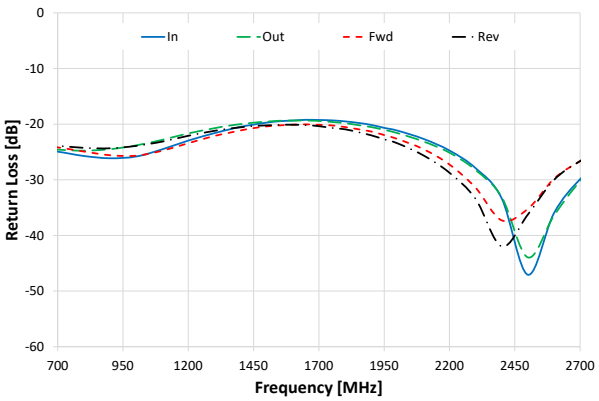

Bi-Directional Coupler BDCH-35-272+

50Ω 700 to 2700 MHz 35 dB 150W

FUNCTIONAL DIAGRAM

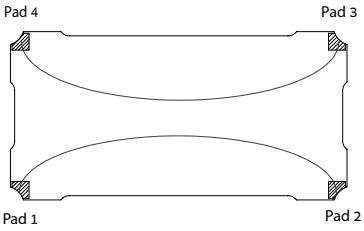

Figure 1. BDCH-35-272+ Functional Diagram

PAD DESCRIPTION/CONFIGURATION[6]

Function	Pad Number	Description
Input	1	Connects to RF Input Port
Output	2	Connects to RF Output Port
Coupled Forward	4	Connects to Coupled Forward Port
Coupled Reverse	3	Connects to Coupled Reverse Port
Ground	5	Connects to Ground

Configuration	Input	Output	Coupled Forward	Coupled Reverse
A	1	2	4	3
B	2	1	3	4
C	3	4	2	1
D	4	3	1	2

6. Model is symmetrical and all ports are interchangeable, see Port Function Description/Configuration table for details and S-Parameters for actual performance.

SUGGESTED PCB LAYOUT (PL-538)

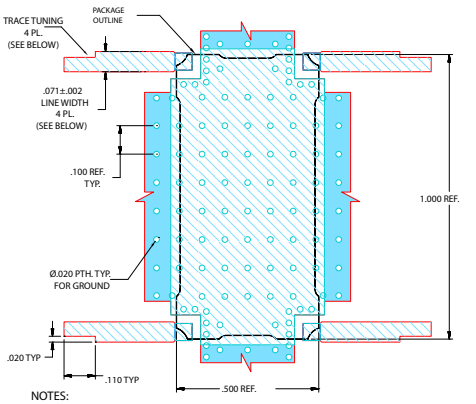

NOTES:
1. TRACE WIDTH IS SHOWN FOR ROGERS RO4003C WITH DIELECTRIC THICKNESS. 0.032"±.0015", COPPER: 1 OZ. EACH SIDE. FOR OTHER MATERIALS TRACE WIDTH MAY NEED TO BE MODIFIED.
2. BOTTOM SIDE OF THE PCB IS CONTINUOUS GROUND PLANE.
3. TRACE TUNING IN RF LINES MAY BE NEEDED TO ACHIEVE SPECIFIED PERFORMANCE.

DENOTES PCB COPPER LAYOUT WITH SMOBC (SOLDER MASK OVER BARE COPPER)
DENOTES COPPER LAND PATTERN FREE OF SOLDERMASK

Figure 2. Suggested PCB Layout PL-538

CASE STYLE DRAWING (PQ2098)

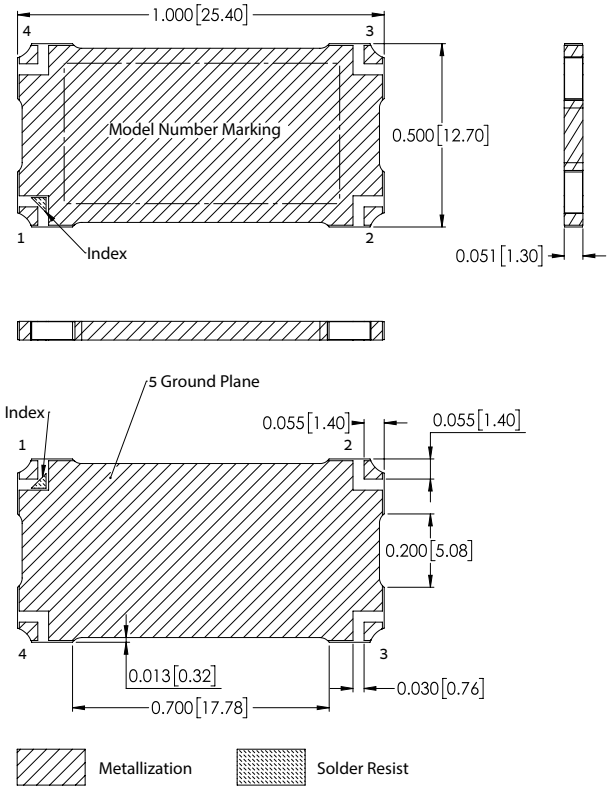

NOTES:
1. Base material: Printed wiring laminate.
2. Termination finish: 2-5 µinch (.05-.13 microns) Immersion Gold.
3. Weight: 2.0 grams
4. Marking may contain other features or characters for internal lot control.

PRODUCT MARKING*: BDCH-35-272+

*Marking may contain other features or characters for internal lot control.

Bi-Directional Coupler BDCH-35-272+

50Ω 700 to 2700 MHz 35 dB 150W

ADDITIONAL DETAILED INFORMATION IS AVAILABLE ON OUR DASH BOARD. CLICK HERE

Performance Data & Graphs	Data Graphs S-Parameter (S4P Files) Data Set (.zip file) De-embedded to device pads
Case Style	PQ2098 Lead Finish: 2-5 inch (0.05-0.13 microns) Immersion Gold.
RoHS Status	Compliant
Tape and Reel	F118
Suggested Layout for PCB Design	PL-538
Evaluation Board	TB-863-1+
	Gerber File
Environmental Rating	ENV02T8

NOTES

A. Performance and quality attributes and conditions not expressly stated in this specification document are intended to be excluded and do not form a part of this specification document.
B. Electrical specifications and performance data contained in this specification document are based on Mini-Circuits' applicable established test performance criteria and measurement instructions.
C. The parts covered by this specification document are subject to Mini-Circuits' standard limited warranty and terms and conditions (collectively, "Standard Terms"); Purchasers of this part are entitled to the rights and benefits contained therein. For a full statement of the standard terms and the exclusive rights and remedies thereunder, please visit Mini-Circuits' website at www.minicircuits.com/terms/viewterm.html