USB | DAISY-CHAIN

MILLIMETER WAVE

Programmable Attenuator

eDAT-67G-60

50Ω 0.01 to 67 GHz 0 to 63 dB 0.5 dB step 1.85 mm female

THE BIG DEAL

- Super wide bandwidth, solid-state design
- High power handling (+26 dBm CW)
- Daisy-chain control of up to 25 units
- USB control and automation
- Display of attenuation state on unit.

APPLICATIONS

- Test & measurement equipment / systems
- 5G FR1 & FR2, WiGig, millimeter wave radio infrastructure
- Communications, Radar, EW, and ECM defense systems
- Satellite communications up to V band



Generic photo used for illustration purposes only.

PRODUCT OVERVIEW

Mini-Circuits' eDAT-67G-60 is a general purpose, single channel programmable attenuator suitable for a wide range of signal level control applications from 10 MHz to 67 GHz. The attenuator provides 0 to 63 dB attenuation in 0.5 dB steps. The attenuator is housed in a compact and rugged package with precision 1.85 mm female RF connectors. A 3-character LED display on the attenuator package shows the current attenuator state.

The daisy-chain control interface with "dynamic addressing" simplifies control integration, allowing multiple units to be combined into a Master / Slave chain. Simply connect, then power on and the whole chain of up to 25 compatible modules can be controlled independently through a single USB and software interface.

Full software support is provided, including our user-friendly GUI application for Windows and a full API with programming instructions for Windows and Linux environments (both 32-bit and 64-bit systems).

KEY FEATURES

Feature	Advantages
Programmable attenuation sweep and hop sequences	The module can be programmed with a timed sequence of attenuation settings, to run without any additional external control.
High performance	Solid-state design combining good accuracy with low insertion loss from 10 MHz to 67 GHz.
Dynamic daisy-chain control	Control up to 25 switches through a single USB interface.
USB control	USB HID interface provide easy compatibility with a wide range of software setups and programming environments.
Full software support	User friendly Windows GUI (graphical user interface) allows manual control straight out of the box, while the comprehensive API (application programming interface) with examples and instructions allows easy automation in most programming environments

Trademarks:
Windows is a registered trademark of Microsoft Corporation in the United States and other countries ; Linux is a registered trademark of Linus Torvalds ; Pentium is a registered trademark of Intel Corporation. Neither Mini-Circuits nor the Mini-Circuits products are affiliated with or endorsed by the owners of the referenced trademarks. Mini-Circuits and the Mini-Circuits logo are registered trademarks of Scientific Components Corporation.

Mini-Circuits
www.minicircuits.com P.O. Box 350166, Brooklyn, NY 11235-0003 (718) 934-4500 sales@minicircuits.com

Programmable Attenuator

eDAT-67G-60

50Ω 0.01 to 67 GHz 0 to 63 dB 0.5 dB step 1.85 mm female

ELECTRICAL SPECIFICATIONS[1] AT 0 TO +50°C

Parameter	Conditions	Frequency (GHz)	Min.	Typ.	Max.	Unit
Attenuation range	0.5 dB step	0.01 - 60	0	-	63	dB
		60 - 67	0	-	55	
Attenuation accuracy	0.5 - 7.5 dB	0.01 - 12	-	-0.40 to -0.05	-	dB
		12 - 18	-	-0.35 to -0.00	-	
		18 - 27	-	-0.10 to 0.05	-	
		27 - 40	-	-0.10 to 0.20	-	
		40 - 60	-	-0.20 to 0.15	-	
		60 - 67	-	-0.40 to 0.10	-	
	8 - 15 dB	0.01 - 12	-	-0.60 to -0.25	-	
		12 - 18	-	-0.85 to -0.40	-	
		18 - 27	-	-0.35 to -0.20	-	
		27 - 40	-	-0.45 to 0.05	-	
		40 - 60	-	-0.60 to 0.10	-	
		60 - 67	-	-0.85 to -0.10	-	
	15.5 - 30 dB	0.01 - 12	-	-1.20 to -0.75	-	
		12 - 18	-	-1.35 to -0.95	-	
		18 - 27	-	-0.80 to -0.35	-	
		27 - 40	-	-0.70 to -0.00	-	
		40 - 60	-	-0.90 to 0.05	-	
		60 - 67	-	-1.70 to -0.15	-	
	30.5 - 55 dB	0.01 - 12	-	-1.60 to -1.00	-	
		12 - 18	-	-2.40 to -1.75	-	
		18 - 27	-	-2.60 to -1.45	-	
		27 - 40	-	-2.40 to -1.05	-	
		40 - 60	-	-1.90 to -0.55	-	
		60 - 67	-	-5.10 to -2.60	-	
	55.5 - 63 dB	0.01 - 12	-	-1.90 to -1.30	-	
		12 - 18	-	-3.15 to -2.65	-	
		18 - 27	-	-3.45 to -3.10	-	
		27 - 40	-	-3.70 to -2.00	-	
		40 - 60	-	-0.90 to 1.25	-	
		60 - 67	-	-4.10 to 0.45	-	
Insertion loss	0 dB	0.01 - 12	-	3.3	4.8	dB
		12 - 18	-	4.6	5.8	
		18 - 27	-	6.2	7.8	
		27 - 40	-	8.2	11.3	
		40 - 60	-	12.3	15.5	
		60 - 67	-	14.3	18.0	

1. Attenuator RF ports support simultaneous, bi-directional signal transmission, within the specified power limits. However the specifications are guaranteed for the RF in and RF out as noted on the label. There may be minor changes in performance when injecting signals to the RF Out port.

Programmable Attenuator

eDAT-67G-60

50Ω 0.01 to 67 GHz 0 to 63 dB 0.5 dB step 1.85 mm female

ELECTRICAL SPECIFICATIONS[1] AT 0 TO +50°C (CONTINUED)

Parameter	Conditions	Frequency (GHz)	Min.	Typ.	Max.	Unit
Return loss in	0 - 15 dB	0.01 - 27	-	18	-	dB
		27 - 40	-	26	-	
		40 - 67	-	16	-	
	15.5 - 63 dB	0.01 - 27	-	25	-	
		27 - 40	-	23	-	
		40 - 67	-	16	-	
Return loss out	0 - 63 dB	0.01 - 50	-	25	-	dB
		50 - 67	-	14	-	
IP3 input [2]	-	1 - 30	-	50	-	dBm
		30 - 46	-	45	-	
Input operating power [1,3,4]	-	0.01 - 0.1	-	-	+12	dBm
		0.1 - 67	-	-	+26	
Attenuation transition time [5]	-	0.01 - 67	-	25	-	µs
Minimum dwell time [6]	High-speed mode	0.01 - 67	-	600	-	µs
Supply voltage (Vcc)	USB port	-	4.75	5	5.25	V_{DC}
Supply current (Icc) [7]		-	-	120	150	mA
Current pass-through [8]	-	-	-	-	500	mA

1. Attenuator RF ports support simultaneous, bi-directional signal transmission, within the specified power limits. However the specifications are guaranteed for the RF in and RF out as noted on the label. There may be minor changes in performance when injecting signals to the RF Out port.
2. IP3 frequency range limited by testing capability.
3. Compression level not noted as it exceeds max safe operating power level.
4. With proper DC power connected.
5. Attenuation transition time is specified as the time between starting to change the attenuation state and settling on the requested attenuation state.
6. Minimum dwell time is the time the module will take to respond to a command to change attenuation states.
7. USB current draw for a single unit with no slave units.
8. Pass through current is the maximum supply current handling of a unit with slave modules attached. If controlling a large number of slave modules additional power supplies should be included to ensure this limit is not exceeded.

ABSOLUTE MAXIMUM RATINGS [9]

Operating temperature		0°C to 50°C
Storage temperature		-20°C to 85°C
DC voltage at RF ports		0 V
V_{USB} MAX		6 V
Max RF power	10 MHz - 30 MHz	+17 dBm
	30 MHz - 67 GHz	+30 dBm

9. Permanent damage may occur if any of these limits are exceeded. Operating in the range between operating power limits and absolute maximum ratings for extended periods of time may result in reduced life and reliability.

Programmable Attenuator

eDAT-67G-60

50Ω 0.01 to 67 GHz 0 to 63 dB 0.5 dB step 1.85 mm female

TYPICAL PERFORMANCE GRAPHS

Attenuation relative to Insertion Loss vs. Frequency @ 25°C

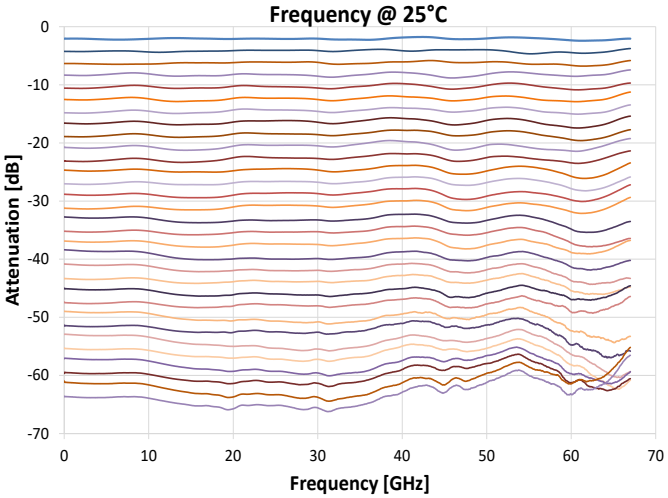

Insertion Loss vs. Frequency over Temperature

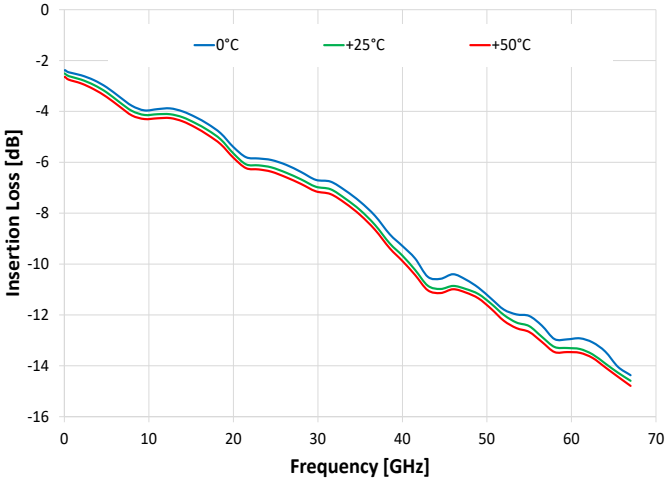

Attenuation Accuracy @ 25°C vs. Frequency over Attenuation settings

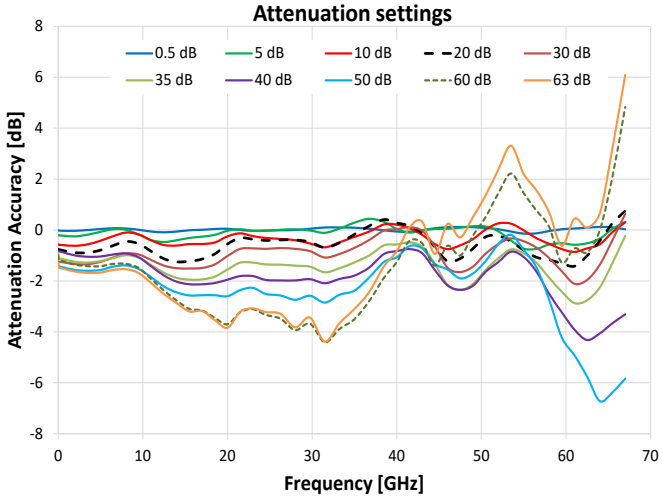

Attenuation Accuracy @ 0°C vs. Frequency over Attenuation settings

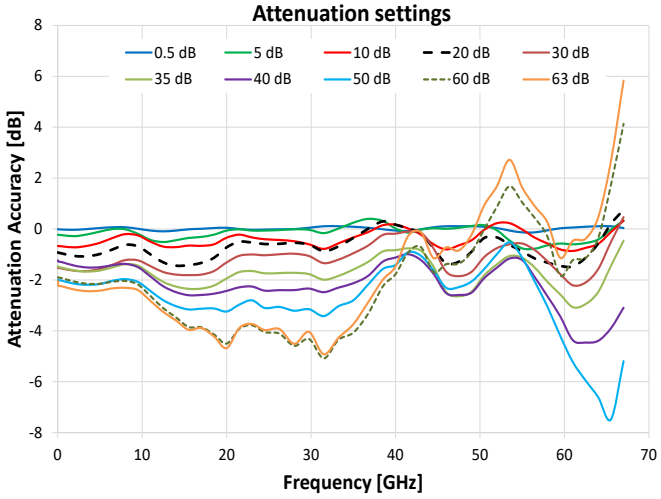

Attenuation Accuracy @ 50°C vs. Frequency over Attenuation settings

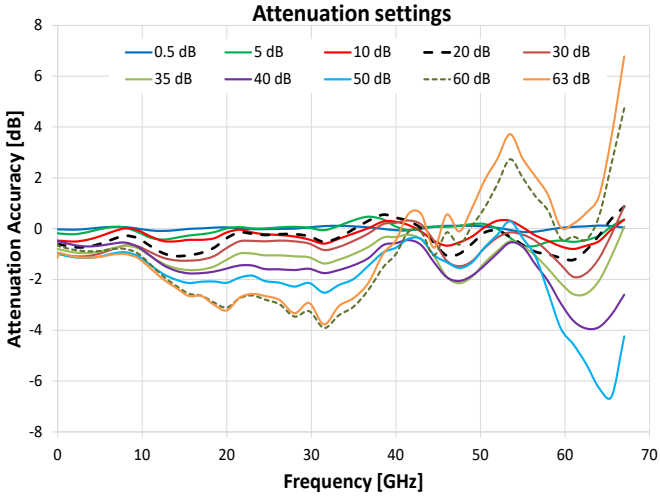

TYPICAL PERFORMANCE GRAPHS (CONTINUED)

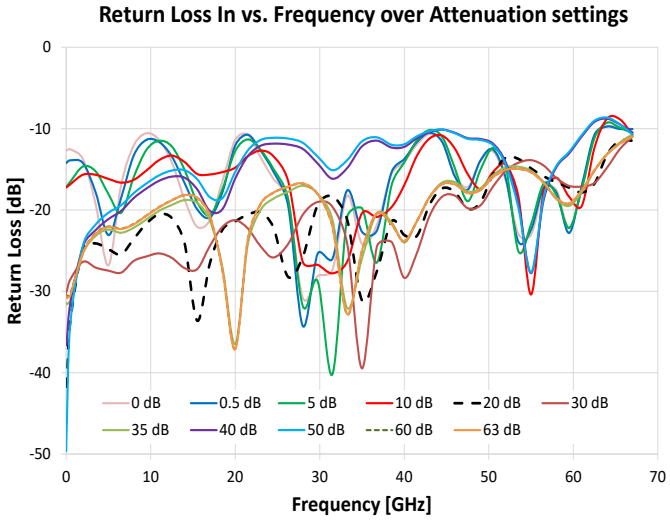

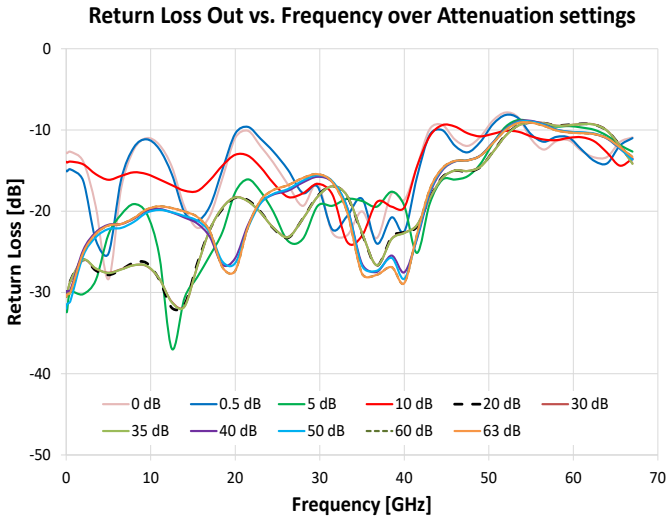

CONTROL INTERFACES

USB control	Supported protocols	HID (Human Interface Device) - Full-speed
	Min communication time [10]	3 ms typ (full transmit/receive cycle)

10. USB min communication time is based on the polling interval of the USB HID protocol (1 ms polling interval, 64 bytes per packet), medium CPU load and no other high speed USB devices using the USB bus.

SOFTWARE & DOCUMENTATION

Mini-Circuits' full software and support package including user guide, Windows GUI, API, programming manual and examples can be downloaded free of charge (refer to the last page for the download path).

A comprehensive set of software control options is provided:

- GUI for Windows – Simple software interface for control via Ethernet and USB.
- Programming / automation via USB:
  - DLL files provide a full API for Windows with a set of intuitive functions which can be implemented in any programming environment supporting .Net Framework or ActiveX.
  - Direct USB programming is possible in any other environment (not supporting .Net or ActiveX).

Please contact testsolutions@minicircuits.com for support.

MINIMUM SYSTEM REQUIREMENTS

GUI	Windows 7 or later
USB API DLL	Windows 7 or later and programming environment with ActiveX or .NET support
USB Direct Programming	Linux, Windows 7 or later
Daisy-chain dynamic addressing	An additional Mini-Circuits model supporting dynamic addressing
Hardware	Intel i3 (or equivalent) or later

Programmable Attenuator

eDAT-67G-60

50Ω 0.01 to 67 GHz 0 to 63 dB 0.5 dB step 1.85 mm female

GRAPHICAL USER INTERFACE (GUI) FOR WINDOWS - KEY FEATURES

- Connect via USB to control the module.
- Run GUI in "demo mode" to evaluate software without a hardware connection.

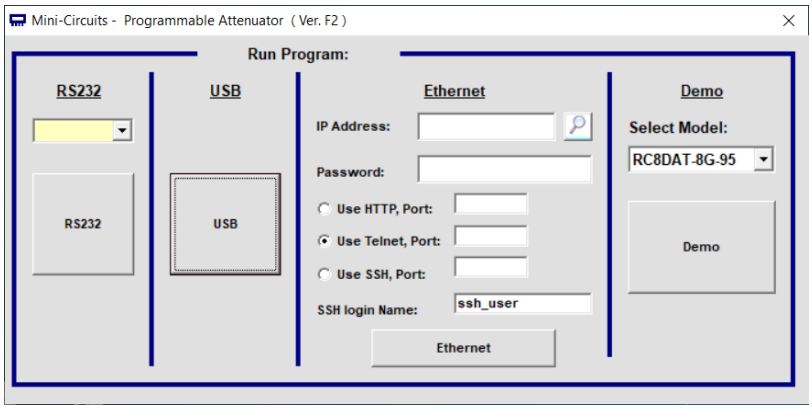

- Manual attenuation setting.
- Sweep and Hop attenuation sequences directed from the PC, or entire sequence loaded into the module.
- Attenuator address configuration and firmware upgrade.
- Attenuation at power up may be set to selected attenuation level or last attenuation state recorded.

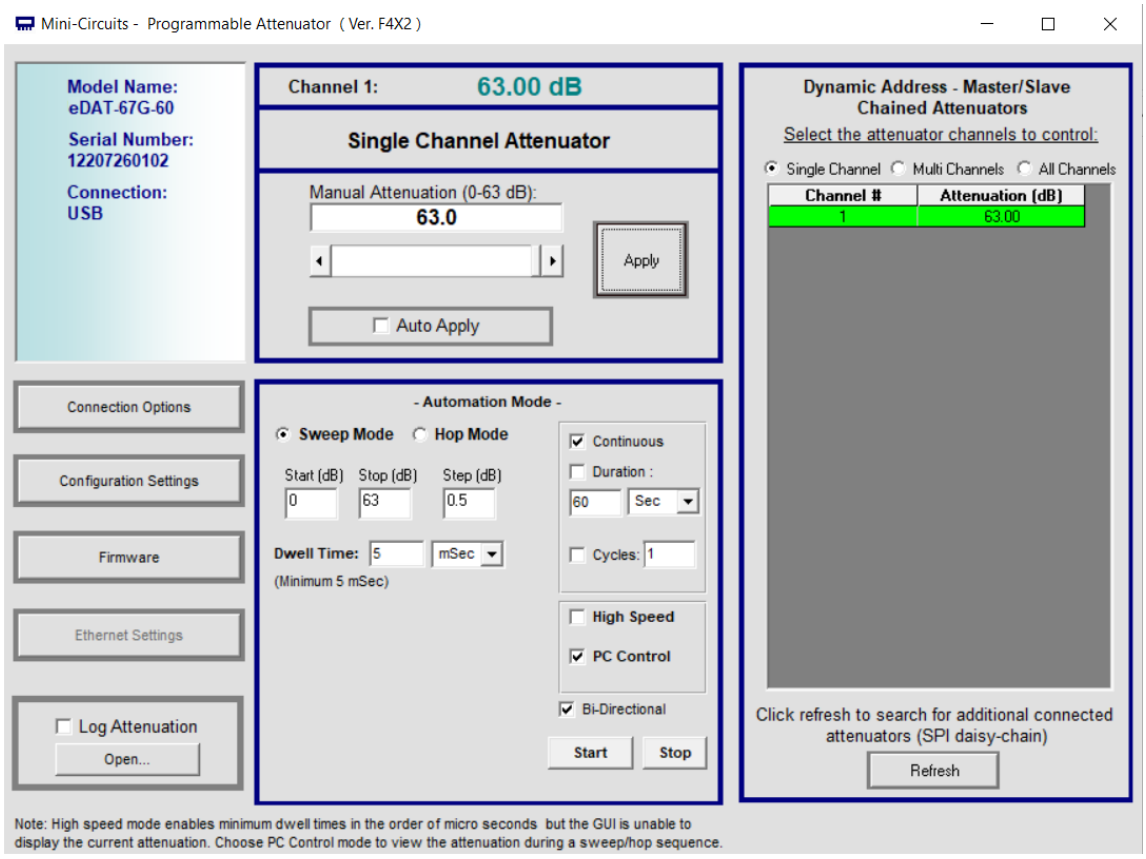

CONNECTING MULTIPLE MODULES (DAISY CHAIN)

The model is designed to connect up to 25 modules in series (daisy chain) using dynamic addressing, meaning there is no need to specifically set the address of the modules. The addresses will be set automatically as part of establishing the communications with the computer. The module connected to the computer's USB port will be assigned address 0 (master), the first module connected to it will get address 1 (slave) and subsequent modules incrementing up to address 24 (slave).

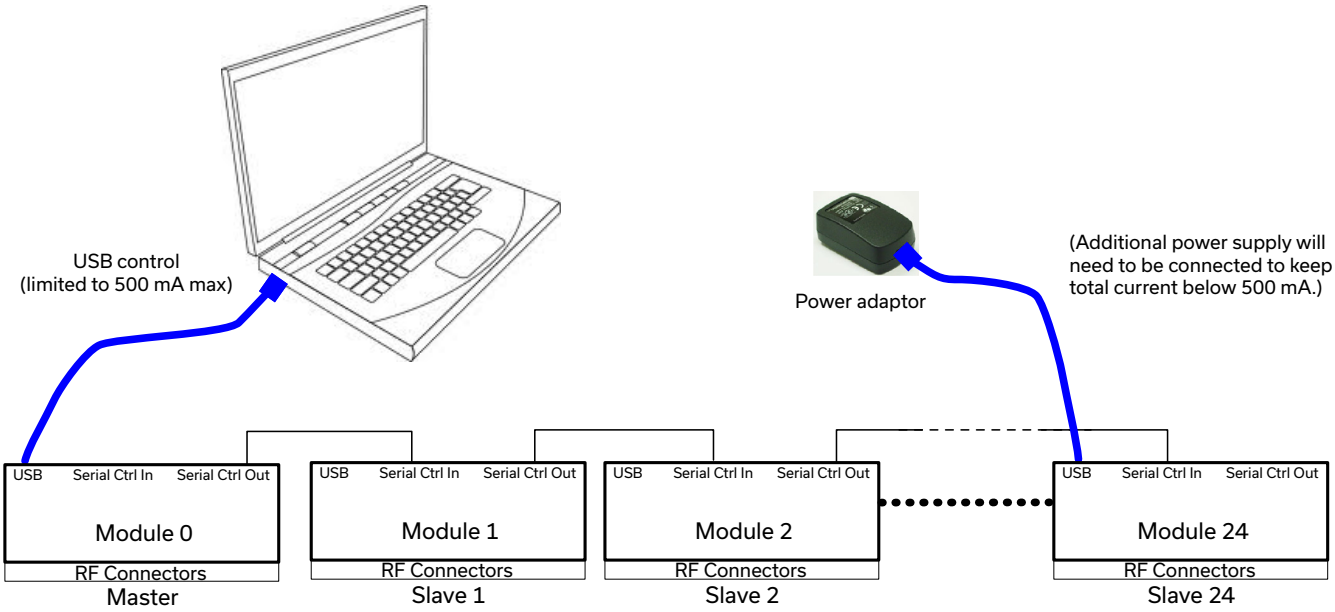

Connections between modules will be made using the serial in/out ports with the module connected to the PC act as a master and all other as slave modules. All control will be through the master module (address 0) which is the only one communicating with the PC. Serial control out port of each module should be connected to the serial control in port of the next module.

Power will be supplied from the PC via the master module up to a maximum of 500 mA. Generally, additional power supply will be needed to keep total current below 500 mA. All power supplies should be connected to the module via the module's USB port. Connecting an additional power supply will automatically cut off power draw from the serial control in port for that module.

The serial master/slave bus allows connecting modules of different types to the same daisy chain as long as all support Mini-Circuits Dynamic addressing setup. To add a new module to the setup, simply connect the module and refresh the address listing, no need to reset any of the existing modules or assign addresses manually.

Note: Different module types may have different current consumption which will change the number of units which can be connected before an additional power supply is needed.

Programmable Attenuator

eDAT-67G-60

50Ω 0.01 to 67 GHz 0 to 63 dB 0.5 dB step 1.85 mm female

PROGRAMMABLE ATTENUATOR RESPONSE TO COMMUNICATION INTERRUPT

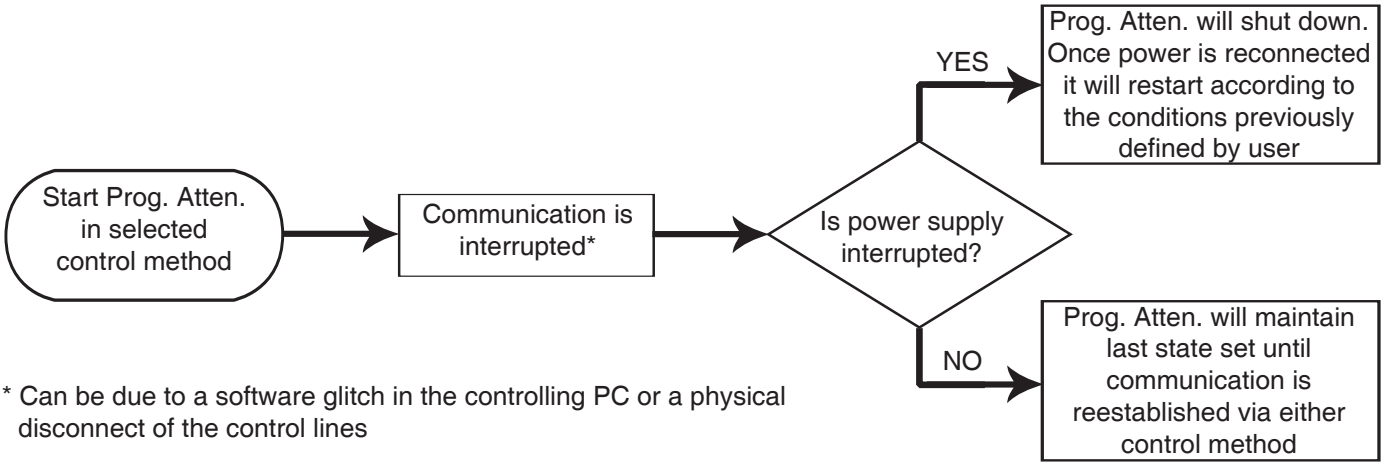

* Can be due to a software glitch in the controlling PC or a physical disconnect of the control lines

BLOCK DIAGRAM

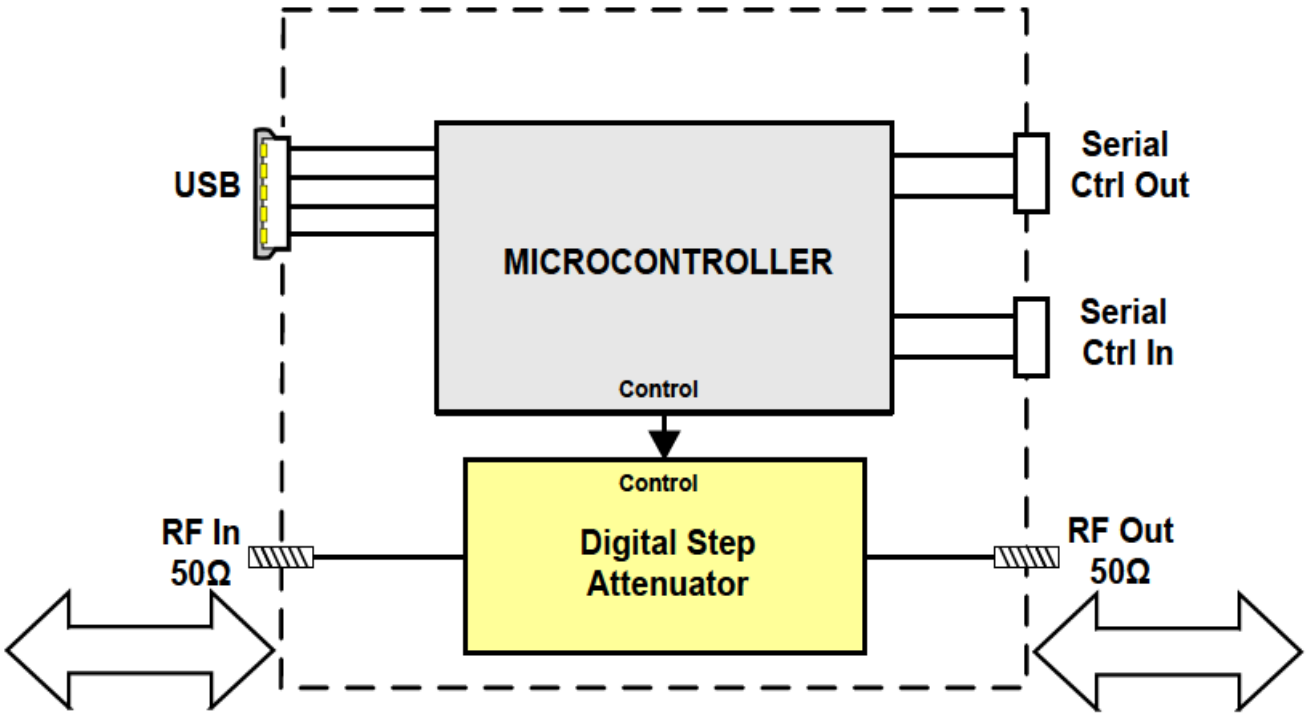

Simultaneous, bidirectional RF signal transmission with symmetrical performance

Programmable Attenuator

eDAT-67G-60

50Ω 0.01 to 67 GHz 0 to 63 dB 0.5 dB step 1.85 mm female

CASE STYLE DRAWING (WP3287)

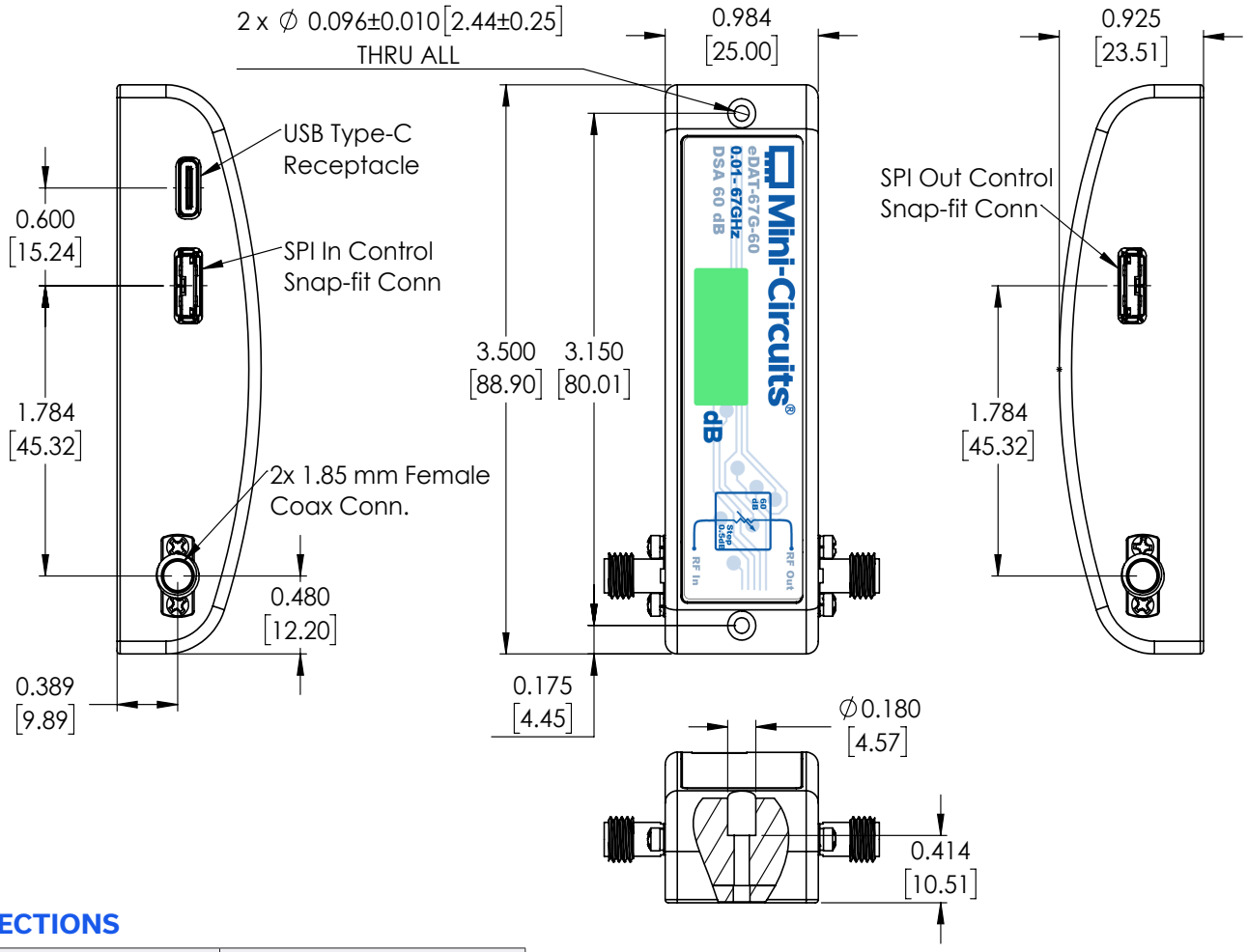

CONNECTIONS

Port Name	Connector Type
RF in & RF out	1.85 mm female
USB	USB type-C receptacle
Serial in (Digital control 2 port)	Digital snap-fit connector [10]
Serial out (Digital control 1 port)	Digital snap-fit connector [10]

10. Mating connector is Hirose ST40X-10S-CV(30).

NOTES:
1. Case material: Aluminum alloy.
2. Case Finish: Nickel Plate.
3. Dimensions: Inches [mm].
   Tolerances 2 Pl. ±.03 inch; 3 Pl. ±.015 inch.
4. Weight: 94 grams
5. Marking may contain other features or characters for internal lot control.

Programmable Attenuator

eDAT-67G-60

50Ω 0.01 to 67 GHz 0 to 63 dB 0.5 dB step 1.85 mm female

ADDITIONAL DETAILED MODEL INFORMATION IS AVAILABLE ON OUR WEBSITE

Ordering information	https://www.minicircuits.com/WebStore/dashboard.html?model=eDAT-67G-60
Performance data & graphs	https://www.minicircuits.com/pages/s-params/eDAT-67G-60_VIEW.pdf https://www.minicircuits.com/pages/s-params/eDAT-67G-60_GRAPHS.pdf
Case style	https://www.minicircuits.com/case_style/WP3287.pdf
Software, user guide & programming manual	https://www.minicircuits.com/softwaredownload/patt.html
Environmental rating	https://www.minicircuits.com/pcb/ENV55T1.pdf
Regulatory compliance	Refer to user guide for compliance information https://www.minicircuits.com/app/AN49-005.pdf
Support	testsolutions@minicircuits.com

INCLUDED ACCESSORIES

Photo	Part No.	Description
	USB-CBL-AC-3+	3.3 ft (1.0 m) USB cable: USB type A (Male) to USB type C (Male)

OPTIONAL ACCESSORIES

Part No.	Description
USB-CBL-AC-3+	3.3 ft (1.0 m) USB cable: USB type A (Male) to USB type C (Male)
CBL-1.5FT-MMD+	1.5 ft (0.45 m) cable assembly for serial control daisy-chain with snap fit connectors
USB-AC/DC-5	AC/DC +5V power adaptor with USB connector [11, 12]

11. The power adaptor may be used to provide additional power via USB port when connecting several units in daisy chain control.
12. Includes power plugs for US, UK, EU, IL, AU & China. Plugs for other countries are also available. If you need a power cord for a country not listed please contact testsolutions@minicircuits.com

NOTES:

A. Performance and quality attributes and conditions not expressly stated in this specification document are intended to be excluded and do not form a part of this specification document.
B. Electrical specifications and performance data contained in this specification document are based on Mini-Circuit's applicable established test performance criteria and measurement instructions.
C. The parts covered by this specification document are subject to Mini-Circuits standard limited warranty and terms and conditions (collectively, "Standard Terms"); Purchasers of this part are entitled to the rights and benefits contained therein. For a full statement of the Standard Terms and the exclusive rights and remedies thereunder, please visit Mini-Circuits' website at https://www.minicircuits.com/terms/viewterm.html