COAXIAL

Adapter

KMR-KM50+

50Ω DC to 40 GHz Right-Angle 2.92 mm-Male to 2.92 mm-Male

THE BIG DEAL

- Ultra-Wideband, DC to 40 GHz
- Low Insertion Loss, 0.13 dB Typ.
- Excellent VSWR, 1.06:1 Typ.
- Flat response



Generic photo used for illustration purposes only

Model No.	KMR-KM50+
Case Style	DJ2442-4
Connectors	Right Angle 2.92 mm M to 2.92 mm M

+RoHS Compliant
The +Suffix identifies RoHS Compliance.
See our website for methodologies and qualifications

APPLICATIONS

- Interconnection of RF cable and equipment

PRODUCT OVERVIEW

Mini-Circuits' KMR-KM50+ is a right-angle 2.92 mm-M to 2.92 mm-M adapter supporting a wide range of applications from DC to 40 GHz. This model provides excellent VSWR, low insertion loss, and flat response versus frequency. The KMR-KM50+ features passivated stainless steel construction and goldplated berillium copper construction center contact.

KEY FEATURES

Features	Advantages
Right-Angle adapter	Enables right-angle interconnections in tight spaces.
Wideband, DC to 40 GHz	Wide frequency range provides application flexibility and makes this model ideal for broadband and multi-band use.
Excellent VSWR, 1.06:1 typ.	Provides good matching for 50Ω systems and minimizes signal reflections across wide frequency range.
Low insertion loss, 0.13 dB typ.	Provides excellent signal power transmission from input to output.
Passivated stainless steel construction and gold-plated berillium copper center contact	Stands up to wear and tear in demanding environments and provides excellent reliability.
Very wide operating temperature range, -55 to +100˚C	Withstands extreme operating conditions and is suitable for use near high power componentry where heat rise is common.

ELECTRICAL SPECIFICATIONS AT 25°C

Parameter	Frequency (GHz)	Min.	Typ.	Max.	Units
Frequency Range	-	DC	-	40	GHz
Insertion Loss	DC - 40	-	0.13	0.8	dB
VSWR	DC - 40	-	1.06	1.26	:1

ABSOLUTE MAXIMUM RATINGS

Parameter	Ratings
Operating Temperature	-55°C to 100°C
Storage Temperature	-55°C to 100°C

Permanent damage may occur if any of these limits are exceeded.

COAXIAL

Adapter

KMR-KM50+

50Ω DC to 40 GHz Right-Angle 2.92 mm-Male to 2.92 mm-Male

COAXIAL CONNECTIONS

Connector 1	2.92 mm -Male
Connector 2	2.92 mm -Male

OUTLINE DRAWING

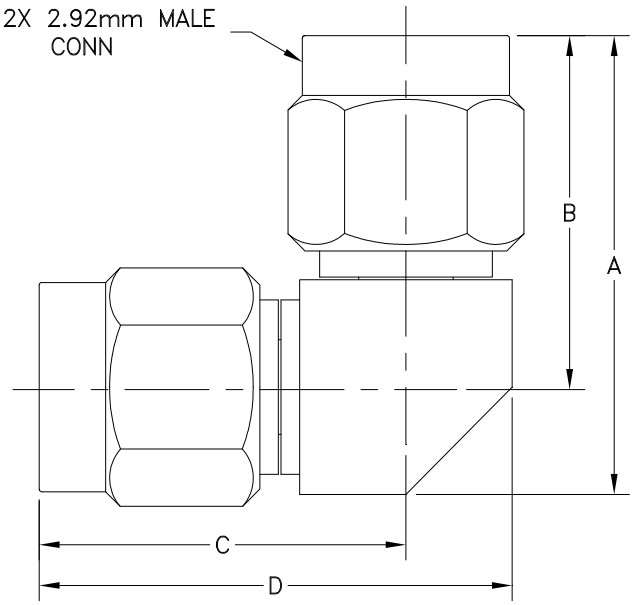

OUTLINE DIMENSIONS (Inches / mm)

A	B	C	D	E	wt
0.673	0.520	0.543	0.701	--	grams
17.10	13.20	13.80	17.80	--	7.0

COAXIAL

Adapter

KMR-KM50+

50Ω DC to 40 GHz Right-Angle 2.92 mm-Male to 2.92 mm-Male

TYPICAL PERFORMANCE DATA AND CHARTS

Frequency (MHz)	Insertion Loss (dB)	VSWR (:1)	
		2.92mm-Male	2.92mm-Male
10	0.00	1.00	1.00
100	0.01	1.00	1.01
500	0.03	1.01	1.01
1000	0.03	1.02	1.02
5000	0.07	1.03	1.03
10000	0.10	1.02	1.03
15000	0.12	1.04	1.04
20000	0.13	1.06	1.05
25000	0.12	1.10	1.08
30000	0.18	1.12	1.11
35000	0.20	1.08	1.04
40000	0.14	1.07	1.15

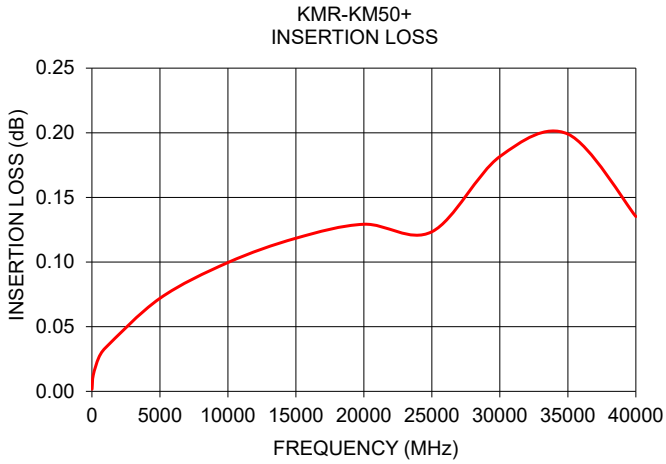

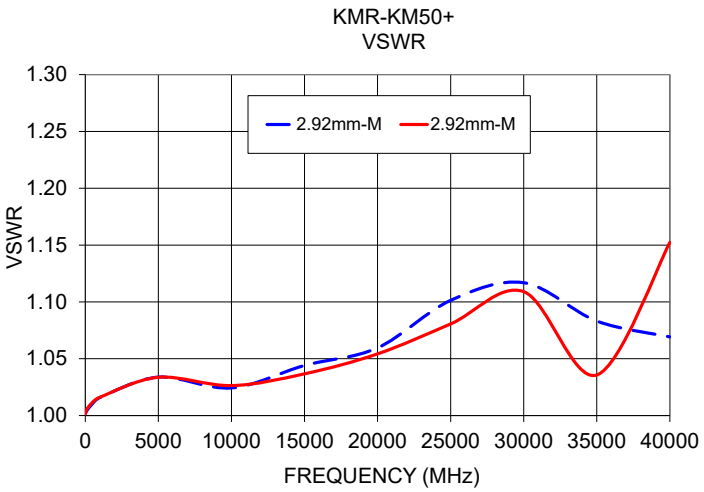

NOTES

A. Performance and quality attributes and conditions not expressly stated in this specification document are intended to be excluded and do not form a part of this specification document.
B. Electrical specifications and performance data contained in this specification document are based on Mini-Circuit's applicable established test performance criteria and measurement instructions.
C. The parts covered by this specification document are subject to Mini-Circuits standard limited warranty and terms and conditions (collectively, "Standard Terms"); Purchasers of this part are entitled to the rights and benefits contained therein. For a full statement of the standard terms and the exclusive rights and remedies thereunder, please visit Mini-Circuits' website at www.minicircuits.com/terms/viewterm.html