Evaluation Board and Circuit

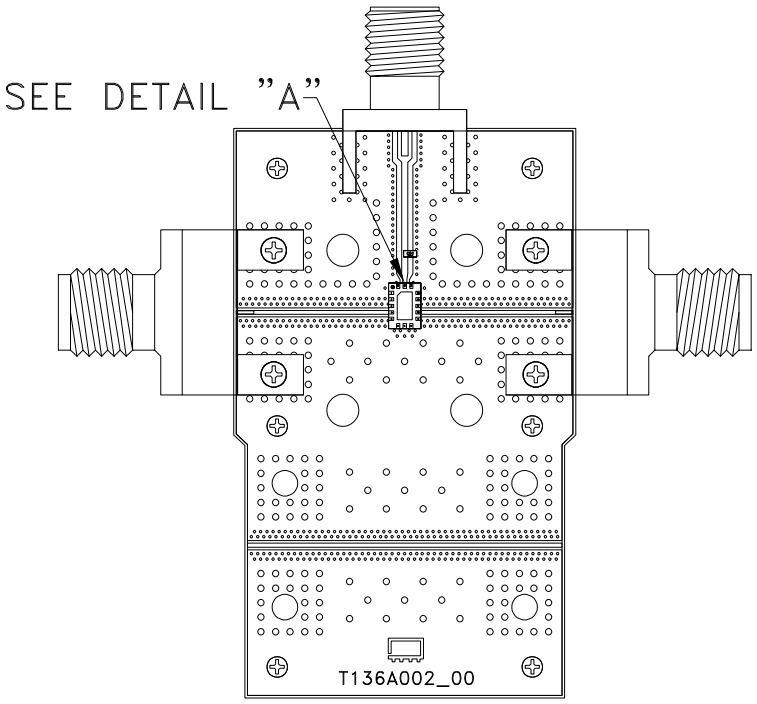

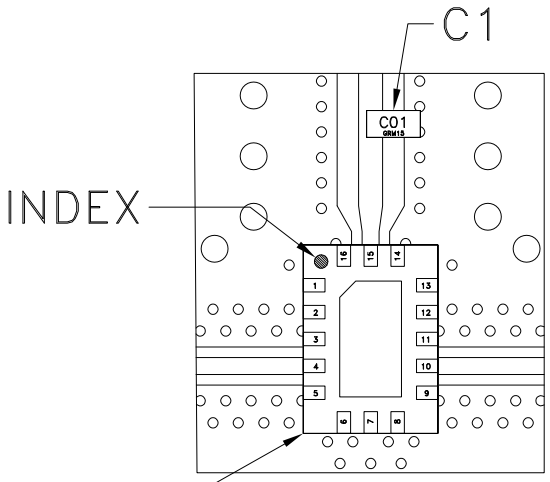

DETAIL "A"
(SCALE 5:1)

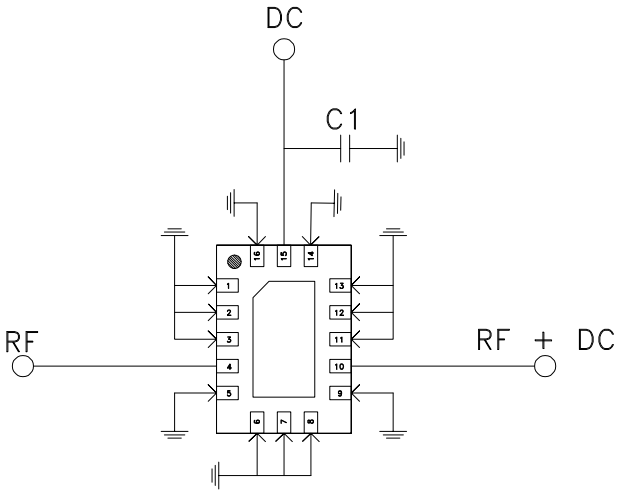

SCHEMATIC DIAGRAM
(SCALE 4:1)

Component	Size	Value	Part Number	Manufacturer
C1	0402	0.1uF	GRM155R71H104KE14J	Murata

Notes:

1. 2.92mm Female Connectors.
2. PCB Material: Roger RO4350B or equivalent,
   Dielectric constant=3.5, Thickness=0.0066 inch

Mini-Circuits®

THIS DOCUMENT AND ITS CONTENTS ARE THE PROPERTY OF MINI-CIRCUITS.