Coaxial

Low Pass Filter

VLFG-2000+

50Ω DC to 2000 MHz



Generic photo used for illustration purposes only

CASE STYLE: FF704

The Big Deal

- Excellent power handling, 5.5W
- Temperature stable
- Rugged unibody construction
- Good rejection, 42 dB typical

Product Overview

VLFG-2000+ is a 50Ω low pass filter built in rugged unibody construction. Covering DC-2000 MHz bandwidth, these units offer good matching within the passband and good rejection in stopband. VLFG-2000+ offer low insertion loss, and excellent power handling capability. It handles up to 5.5W RF input power and provides a wide operating temperature range from -55°C to 125°C.

Key Features

Feature	Advantages
Low passband insertion loss	Suitable for high performance application.
5.5W Power handling	Supports a range of system power requirements.
Connectorized package	The connectorized package is easy to interface with other devices and well suited for test setups.

Notes
A. Performance and quality attributes and conditions not expressly stated in this specification document are intended to be excluded and do not form a part of this specification document.
B. Electrical specifications and performance data contained in this specification document are based on Mini-Circuit's applicable established test performance criteria and measurement instructions.
C. The parts covered by this specification document are subject to Mini-Circuits standard limited warranty and terms and conditions (collectively, "Standard Terms"); Purchasers of this part are entitled to the rights and benefits contained therein. For a full statement of the Standard Terms and the exclusive rights and remedies thereunder, please visit Mini-Circuits' website at www.minicircuits.com/MCLStore/terms.jsp

Coaxial

Low Pass Filter

VLFG-2000+

50Ω DC to 2000 MHz



Generic photo used for illustration purposes only
CASE STYLE: FF704

+RoHS Compliant
The +Suffix identifies RoHS Compliance. See our web site for RoHS Compliance methodologies and qualifications

Features

- Low loss, 1.1dB typ.
- Very good rejection 42dB typ.
- Excellent power handling, 5.5W
- Temperature stable
- Connectorized package
- Rugged unibody construction

Applications

- Military radio applications
- Test and measurement
- Telecommunications and broadband wireless applications
- Military Radar applications.

Functional Schematic

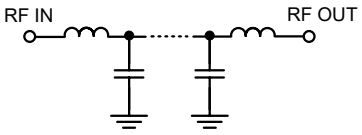

Typical Frequency Response

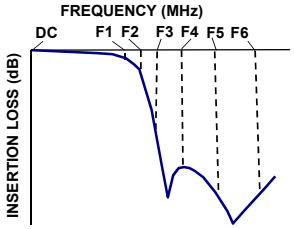

Electrical Specifications at 25°C

Parameter		F#	Frequency (MHz)	Min.	Typ.	Max.	Unit
Pass Band	Insertion Loss	DC-F1	DC - 2000	—	1.1	1.7	dB
	Freq. Cut-Off	F2*	2350	—	3.0	—	dB
	Return Loss	DC-F1	DC - 2000	—	16	—	dB
Stop Band	Rejection Loss	F3-F4	2850 - 3300	20	40	—	dB
		F4-F5	3300 - 7500	32	42	—	dB
		F5-F6	7500 - 13500	—	28	—	dB

In Application where DC voltage is present at either input or output port, DC blocks are required.
* Typically, a ±5% frequency deviation from the stated value may occur on a unit-to-unit basis.

Maximum Ratings	
Operating Temperature	-55°C to 125°C
Storage Temperature	-55°C to 125°C
RF Power Input*	5.5W max.@25°C

*Passband rating, derate linearly to 1W at 125°C ambient
Permanent damage may occur if any of these limits are exceeded.

Typical Performance Data at 25°C

Frequency (MHz)	Insertion Loss (dB)	Return Loss (dB)
10	0.04	42.93
100	0.12	31.19
300	0.21	24.71
500	0.29	21.84
700	0.35	20.05
1000	0.45	18.66
1500	0.60	23.15
2000	1.07	18.39
2350	2.62	13.19
2370	3.03	10.78
2510	9.86	2.62
2635	20.34	1.18
2725	29.63	0.88
2850	49.02	0.70
3300	66.56	0.50
5000	54.29	0.39
7500	44.25	0.41
9000	39.81	0.43
11000	33.19	0.43
13500	29.79	0.92

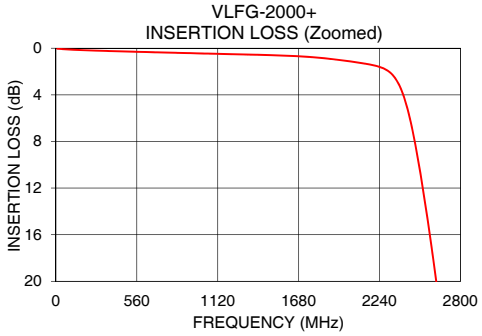

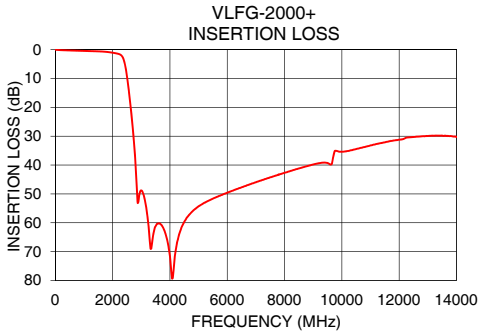

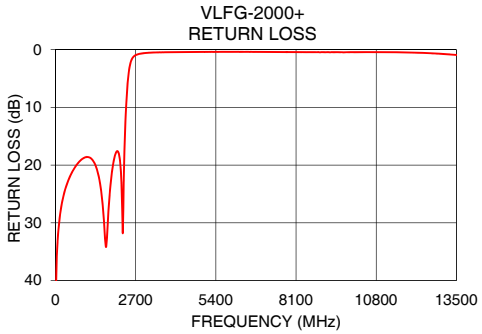

Notes
A. Performance and quality attributes and conditions not expressly stated in this specification document are intended to be excluded and do not form a part of this specification document.
B. Electrical specifications and performance data contained in this specification document are based on Mini-Circuit's applicable established test performance criteria and measurement instructions.
C. The parts covered by this specification document are subject to Mini-Circuits standard limited warranty and terms and conditions (collectively, "Standard Terms"); Purchasers of this part are entitled to the rights and benefits contained therein. For a full statement of the Standard Terms and the exclusive rights and remedies thereunder, please visit Mini-Circuits' website at www.minicircuits.com/MCLStore/terms.jsp

Coaxial Connections

PORT - 1	SMA-Male
PORT - 2	SMA-Female

Outline Drawing

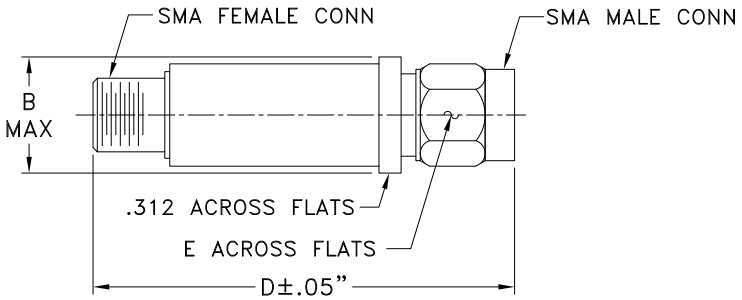

Outline Dimensions (inch / mm)

B	D	E	wt.
.410	**1.43**	**.312**	grams
10.41	36.32	7.92	10

Note: Please refer to case style drawing for details

Notes
A. Performance and quality attributes and conditions not expressly stated in this specification document are intended to be excluded and do not form a part of this specification document.
B. Electrical specifications and performance data contained in this specification document are based on Mini-Circuit's applicable established test performance criteria and measurement instructions.
C. The parts covered by this specification document are subject to Mini-Circuits standard limited warranty and terms and conditions (collectively, "Standard Terms"); Purchasers of this part are entitled to the rights and benefits contained therein. For a full statement of the Standard Terms and the exclusive rights and remedies thereunder, please visit Mini-Circuits' website at www.minicircuits.com/MCLStore/terms.jsp