WAVEGUIDE/COAXIAL

Adapter

WR12-10R+

50Ω 60 to 90 GHz Right-Angle 1.0 mm-Female to WR12 UG387/U Flange

KEY FEATURES

- Full E-band frequency band, 60-90 GHz
- Low Insertion Loss, 0.6 dB Typ.
- Excellent VSWR, 1.2:1 Typ.
- Compact right-angle design
- Precision UG387/U anti-cocking waveguide flange
- 1.0 mm-Female connector



Generic photo used for illustration purposes only

HANDLING INSTRUCTIONS
1.0 mm connectors require specific handling and torque values. See Mini-Circuits Application Note AN-71-001 for detail.

PRODUCT OVERVIEW

Mini-Circuits' WR12-10R+ is a waveguide to coaxial adapter operating from 60 to 90 GHz. This product features a WR12 waveguide interface with a precision standard UG387/U anti-cocking flange to a 1.0 mm-Female coaxial connector. The WR12-10R+ features aluminum alloy construction and a gold-plated finish to ensure repeatable RF performance. This right-angle adapter has applications in R&D, over-the-air (OTA) mmWave test laboratories as well as in E-Band communication and SATCOM systems. Mounting screws are included with product purchase.

ELECTRICAL SPECIFICATIONS AT +25°C

Parameter	Frequency (GHz)	Min.	Typ.	Max.	Units
Frequency Range		60		90	GHz
Insertion Loss	60-70		0.6	1.0	dB
	70-80		0.6	1.0	
	80-90		0.6	1.0	
VSWR	60-70		1.2	1.5	:1
	70-80		1.2	1.5	
	80-90		1.1	1.5	

ABSOLUTE MAXIMUM RATINGS[1]

Operating Case Temperature	+10°C to +40°C
Storage Temperature	-55°C to +100°C

1. Permanent damage may occur if any of these limits are exceeded.

Adapter

WR12-10R+

50Ω 60 to 90 GHz Right-Angle 1.0 mm-Female to WR12 UG387/U Flange

TYPICAL PERFORMANCE GRAPHS

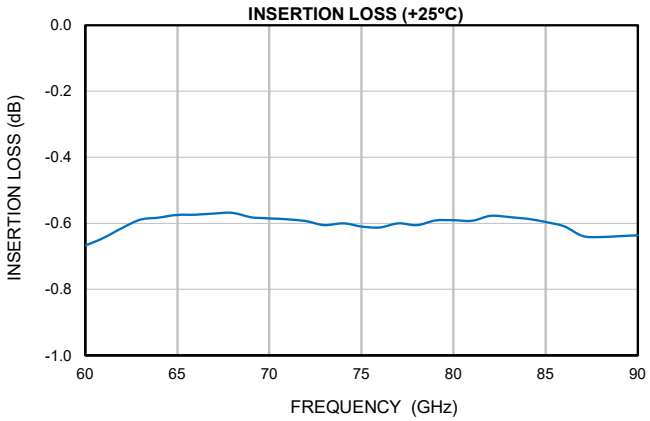

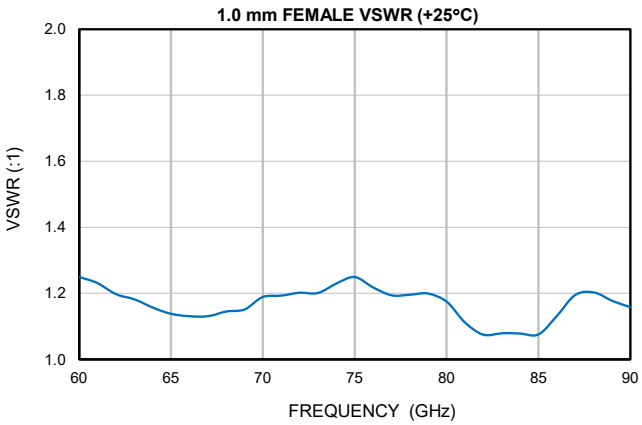

Adapter

WR12-10R+

50Ω 60 to 90 GHz Right-Angle 1.0 mm-Female to WR12 UG387/U Flange

CONNECTOR SPECIFICATIONS

Description	Connector 1	Connector 2
Connector Type	WR12 UG387/U Flange	1.0 mm Female
Orientation	Straight	Right-Angle

CASE STYLE DRAWING

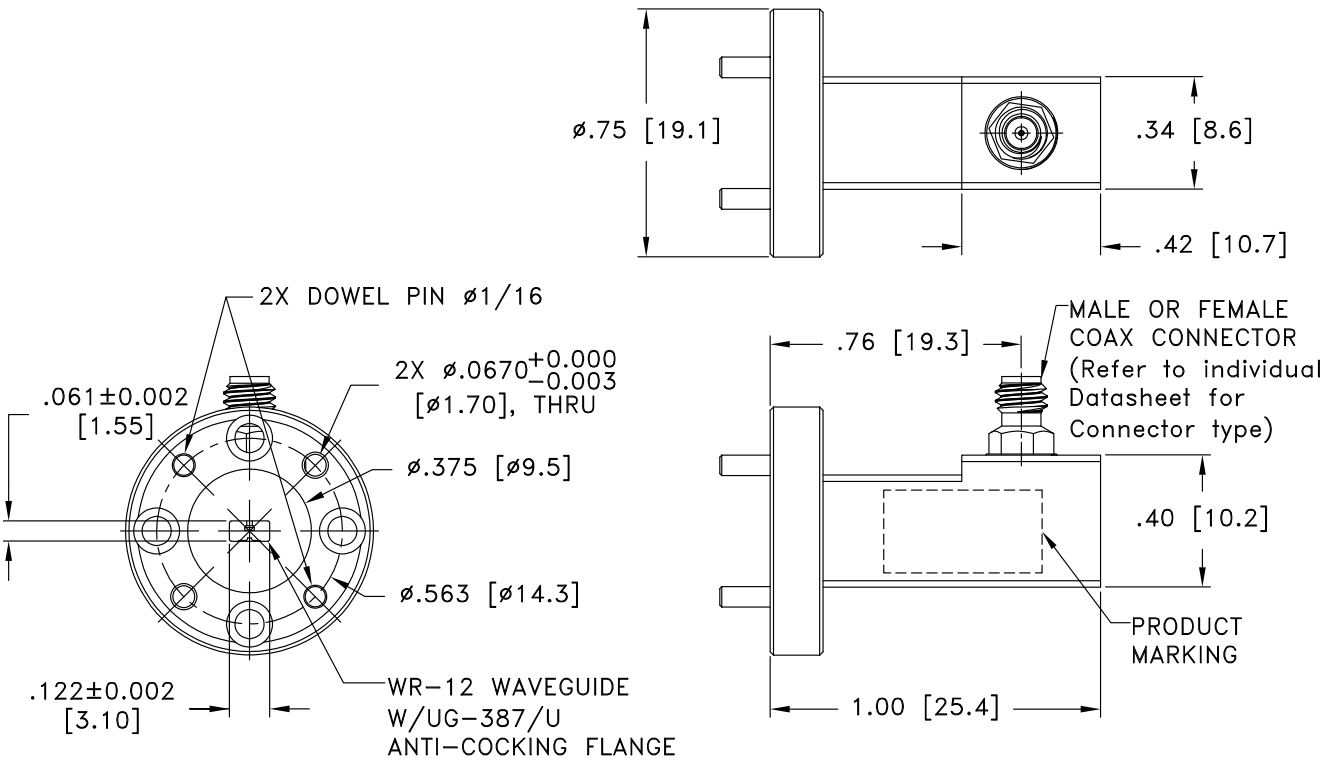

Weight: 11 grams
Dimensions are in inches [mm]. Tolerances: 2 Pl.±.03; 3 Pl. ±.015 Inches

PRODUCT MARKING*: WR12-10R+

*Marking may contain other features or characters for internal lot control.

Adapter

WR12-10R+

50Ω 60 to 90 GHz Right-Angle 1.0 mm-Female to WR12 UG387/U Flange

ADDITIONAL INFORMATION IS AVAILABLE ON OUR DASHBOARD CLICK HERE

Performance Data & Graphs	Data Graphs S-Parameter (S2P Files) Data Set (.zip file)
Case Style	UW3676
RoHS Status	Compliant
Environmental Ratings	ENV145

Notes

A. Performance and quality attributes and conditions not expressly stated in this specification document are intended to be excluded and do not form a part of this specification document.

B. Electrical specifications and performance data contained in this specification document are based on Mini-Circuits' applicable established test performance criteria and measurement instructions.

C. The parts covered by this specification document are subject to Mini-Circuits' standard limited warranty and terms and conditions (collectively, "Standard Terms"; Purchasers of this part are entitled to the rights and benefits contained therein. For a full statement of the standard terms and the exclusive rights and remedies thereunder, please visit Mini-Circuits' website at https://www.minicircuits.com/terms/viewterm.html