High Power, DC Pass

Power Splitter/Combiner ZACS362-100W+

2 Way-0° 50Ω Up to 100W 650 to 3600 MHz

The Big Deal

- High power, up to 100W as a splitter
- Low insertion loss, 0.5 dB
- Good isolation, 22 dB



ZACS362-100WS+



ZACS362-100WSX+

Product Overview

Mini-Circuits' ZACS362-100W+ is a 2-way 0˚ splitter/combiner providing very high power handling and low insertion loss across 600 to 3600 MHz, covering the primary wireless communications bands as well as satellite IF and GPS. Its outstanding combination of high power and low loss minimize power dissipation due to intrinsic losses and provide excellent signal fidelity from input to output. This model also provides high port-to-port isolation and very low amplitude and phase unbalance. It comes housed in a rugged aluminum alloy case with your choice of SMA or N-Type connectors and an optional heat sink and fan for cooling.

Key Features

Feature	Advantages
Wideband, 650 to 3600 MHz	ZACS362-100W+ covers many wireless communications bands, making it suitable for a wide variety of applications.
High power handling: • 100W as a splitter • 5W as a combiner	Suitable for many high power applications.
Low insertion loss, 0.5 dB	Very low insertion loss minimizes intrinsic losses, making this model a suitable candidate for high power signal distribution applications where low loss is a requirement.
Low unbalance: • 0.15 dB amplitude unbalance • 1˚ phase unbalance	ZACS362-100W+ produces nearly equal output signals, ideal for parallel path / multichannel systems.
DC Passing, 1.6A (0.8A each port)	Supports applications where DC power is needed at later stages in the system.

Notes
A. Performance and quality attributes and conditions not expressly stated in this specification document are intended to be excluded and do not form a part of this specification document.
B. Electrical specifications and performance data contained in this specification document are based on Mini-Circuit's applicable established test performance criteria and measurement instructions.
C. The parts covered by this specification document are subject to Mini-Circuits standard limited warranty and terms and conditions (collectively, "Standard Terms"); Purchasers of this part are entitled to the rights and benefits contained therein. For a full statement of the Standard Terms and the exclusive rights and remedies thereunder, please visit Mini-Circuits' website at www.minicircuits.com/MCLStore/terms.jsp

High Power DC Pass
Power Splitter/Combiner

ZACS362-100W+

2 Way-0° 50Ω Up to 100W 600 to 3600 MHz



ZACS362-100WS+



ZACS362-100WSX+

Generic photo used for illustration purposes only

CASE STYLE: CP1829

Connectors	Model
SMA	ZACS362-100WS+
SMA	ZACS362-100WSX+▲
N-TYPE	ZACS362-100WN+
N-TYPE	ZACS362-100WNX+▲

+RoHS Compliant
The +Suffix identifies RoHS Compliance. See our web site for RoHS Compliance methodologies and qualifications

Maximum Ratings

Operating Temperature	-55°C to 75°C
Storage Temperature	-55°C to 100°C
DC PASS	1.6A (0.8A/each port)
FAN DC Supply	24V
FAN Current	0.15A

Permanent damage may occur if any of these limits are exceeded.

Coaxial Connections

SUM PORT	S
PORT 1	1
PORT 2	2

Features

- high power, up to 100W as splitter
- high power, up to 5.0W as combiner
- low insertion loss, 0.5 dB typ.
- high isolation, 22 dB typ.
- excellent VSWR, 1.20 typ.

Applications

- PCS
- GPS
- Wimax
- GSM
- UMTS
- WCDMA
- DCS
- communication transmitters & receivers

Outline Drawing

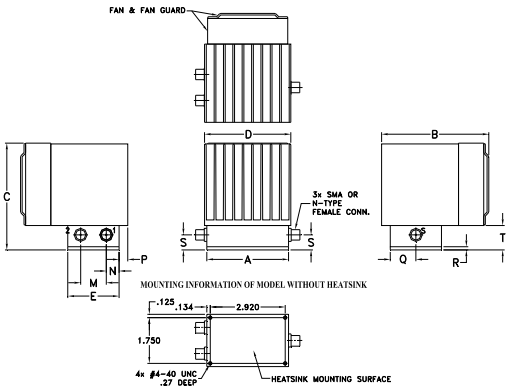

Outline Dimensions (inch / mm)

A	B	C	D	E	F	G	H	J	K
3.19	4.18	4.09	3.36	2.00	--	--	--	--	--
81.03	106.17	103.89	85.34	50.80	--	--	--	--	--

L	M	N	P	Q	R	S	T	wt
--	1.00	.50	.34	1.00	.13	.58	.94	grams*
--	25.40	12.70	8.64	25.40	3.30	14.73	23.88	710.0

*190 grams without heatsink

Electrical Schematic

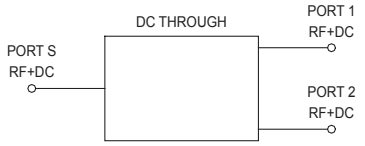

Electrical Specifications at 25°C

Parameter		Frequency (MHz)	Min.	Typ.	Max.	Unit
Frequency Range			600		3600	MHz
Insertion Loss Above 3.0 dB		690-2700 600-3600	— —	0.3 0.6	0.7 1.2	dB
Isolation		690-2700 600-3600	18 13	22 18	— —	dB
Phase Unbalance		600-3600	—	1.0	5.0	Degree
Amplitude Unbalance		600-3600	—	0.15	0.4	dB
VSWR (Port S)		600-3600 690 -2700	— —	1.3 1.25	1.6 1.45	:1
VSWR (Port 1-2)		600-3600	—	1.15	1.35	:1
Power Input	**as combiner**	600-3600	—	—	5	W
	as splitter[1]	600-2700 2700-3600	— —	— —	100 50	

1. Over -55°C to +55°C. Derate linearly to 20% of rating at 75°C. All outputs must terminate 50 ohm (VSWR 1.5:1 or better)

▲Heat sink and fan not included. Alternative heat sinking and heat removal must be provided by the user to limit maximum base-plate temperature to 55°C, in order to ensure proper performance. For reference, this requires thermal resistance of user's external heat sink to be 1.3°C/W max.

Typical Performance Data

Frequency (MHz)	Total Loss[1] (dB)		Amplitude Unbalance (dB)	Isolation (dB)	Phase Unbalance (deg.)	VSWR S	VSWR 1	VSWR 2
	S-1	S-2						
600	3.24	3.24	0.00	17.94	0.17	1.34	1.04	1.01
800	3.18	3.19	0.01	33.19	0.17	1.12	1.05	1.06
1000	3.19	3.21	0.02	25.14	0.16	1.07	1.03	1.05
1200	3.26	3.28	0.03	20.84	0.16	1.21	1.08	1.07
1400	3.31	3.33	0.02	21.32	0.21	1.30	1.17	1.16
1600	3.32	3.34	0.02	26.11	0.25	1.30	1.22	1.23
1800	3.30	3.31	0.01	30.36	0.32	1.23	1.19	1.20
2000	3.31	3.32	0.01	22.97	0.37	1.19	1.09	1.10
2400	3.41	3.43	0.02	21.14	0.49	1.30	1.16	1.15
2600	3.39	3.42	0.03	26.71	0.57	1.23	1.20	1.18
2700	3.37	3.40	0.03	34.65	0.56	1.16	1.18	1.16
3000	3.39	3.40	0.01	24.15	0.57	1.13	1.02	1.02
3200	3.46	3.45	0.01	21.61	0.64	1.23	1.13	1.12
3400	3.50	3.45	0.04	21.58	0.68	1.16	1.23	1.18
3600	3.55	3.49	0.07	17.29	0.82	1.12	1.19	1.15

1. Total Loss = Insertion Loss + 3dB splitter theoretical loss.

ZACS362-100W+
TOTAL LOSS

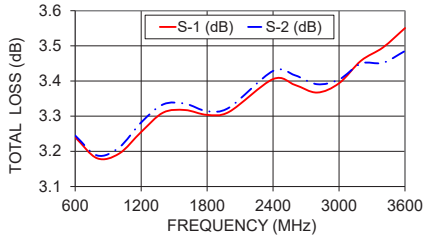

ZACS362-100W+
ISOLATION

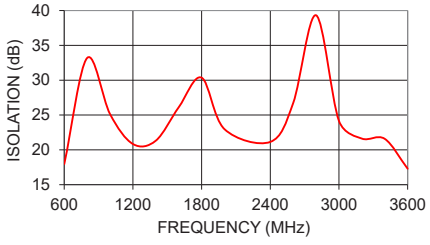

ZACS362-100W+
VSWR

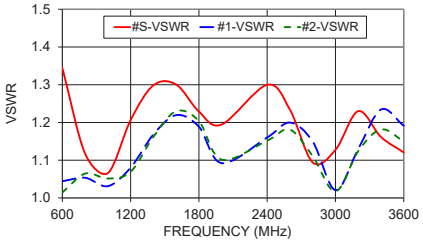

Notes

A. Performance and quality attributes and conditions not expressly stated in this specification document are intended to be excluded and do not form a part of this specification document.
B. Electrical specifications and performance data contained in this specification document are based on Mini-Circuit's applicable established test performance criteria and measurement instructions.
C. The parts covered by this specification document are subject to Mini-Circuits standard limited warranty and terms and conditions (collectively, "Standard Terms"); Purchasers of this part are entitled to the rights and benefits contained therein. For a full statement of the Standard Terms and the exclusive rights and remedies thereunder, please visit Mini-Circuits' website at www.minicircuits.com/MCLStore/terms.jsp

REV. D
ECO-006612
ZACS362-100W+
ED-17216/2
JC/CP/AM
210226

Mini-Circuits®
www.minicircuits.com P.O. Box 350166, Brooklyn, NY 11235-0003 (718) 934-4500 sales@minicircuits.com