DC Pass, Coaxial

Power Splitter/Combiner ZFSC-2-1WDC-S+

2 Way-0° 50Ω 1 to 750 MHz

The Big Deal

- Wideband, 1 to 750 MHz
- Low insertion loss, 0.4 dB
- Low unbalance, 0.1 dB, 0.5˚
- High isolation, 28 dB
- DC Passing up to 30mA



CASE STYLE: K18

Product Overview

Mini-Circuits' ZFSC-2-1WDC-S+ is a 2-way 0˚ splitter/combiner supporting applications from 1 to 750 MHz such a VHF/UHF communications. This model is capable of handling up to 1W RF input power and passing up to 30mA DC current (15mA per port) from input to output. It provides very low insertion loss of just 0.4 dB, low phase and amplitude unbalance of 0.5° and 0.1 dB, respectively, and outstanding isolation of 28 dB. The ZFSC-2-1WDC-S+ comes housed in a rugged aluminum alloy case measuring 1.25 x 1.25 x 0.75" with SMA connectors at all ports.

Key Features

Feature	Advantages
Wideband, 1 to 750 MHz	This model supports bandwidth requirements for VHF/UHF communications.
Low insertion loss, 0.4 dB	Efficient transmission of signal power from input to output.
Low unbalance: • 0.1 dB amplitude unbalance • 0.5˚ phase unbalance	Produces nearly equal output signals, ideal for parallel path and multichannel systems.
High isolation, 28 dB	Minimizes interference between ports.
DC Passing, 30mA (15mA each port)	Supports applications where DC power is needed through the RF line.

Notes
A. Performance and quality attributes and conditions not expressly stated in this specification document are intended to be excluded and do not form a part of this specification document.
B. Electrical specifications and performance data contained in this specification document are based on Mini-Circuit's applicable established test performance criteria and measurement instructions.
C. The parts covered by this specification document are subject to Mini-Circuits standard limited warranty and terms and conditions (collectively, "Standard Terms"); Purchasers of this part are entitled to the rights and benefits contained therein. For a full statement of the Standard Terms and the exclusive rights and remedies thereunder, please visit Mini-Circuits' website at www.minicircuits.com/MCLStore/terms.jsp

DC Pass, Coaxial

Power Splitter/Combiner

ZFSC-2-1WDC-S+

2 Way-0° 50Ω 1 to 750 MHz



Generic photo used for illustration purposes only

CASE STYLE: K18

Connectors	Model
SMA	ZFSC-2-1WDC-S+

+RoHS Compliant

The +Suffix identifies RoHS Compliance. See our web site for RoHS Compliance methodologies and qualifications

Maximum Ratings

Operating Temperature	-55°C to 100°C
Storage Temperature	-55°C to 100°C
Power Input (as a splitter)	1W max.
Internal Dissipation	0.125W max.
DC Current	30mA (15mA per port)

Permanent damage may occur if any of these limits are exceeded.

Coaxial Connections

SUM PORT	3
PORT 1	1
PORT 2	2

Features

- low insertion loss, 0.4 dB typ.
- high isolation, 28 dB typ.
- excellent amplitude unbalance, 0.1 dB typ.
- excellent phase unbalance, 0.5 deg. typ.
- very good return loss, VSWR, 1.15:1 typ.
- rugged shielded case

Applications

- VHF/UHF
- federal & defense communication

Outline Drawing

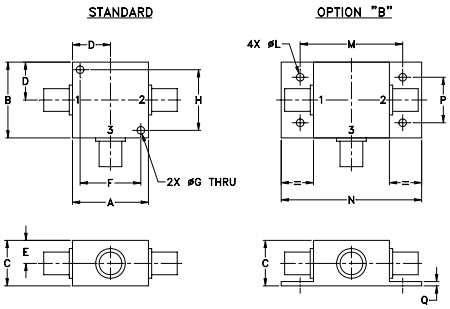

Outline Dimensions (inch / mm)

A	B	C	D	E	F	G	H
1.25	1.25	.75	.63	.38	1.00	.125	1.000
31.75	31.75	19.05	16.00	9.65	25.40	3.18	25.40

J	K	L	M	N	P	Q	wt
--	--	.125	1.688	2.18	.75	.07	grams
--	--	3.18	42.88	55.37	19.05	1.78	70.0

For option B with N-type connectors, dimension "C" increases to 0.94 inches.

Electrical Schematic

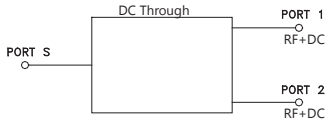

Electrical Specifications at 25°C

Parameter	Frequency (MHz)	Min.	Typ.	Max.	Unit
Frequency Range		1		750	MHz
Insertion Loss Above 3.0 dB	1-10	--	0.2	0.5	dB
	10-375	--	0.4	0.8	
	375-750	--	0.8	1.0	
Isolation	1-10	20	30	--	dB
	10-375	20	28	--	
	375-750	20	25	--	
Phase Unbalance (±)	1-10	--	0.1	2.0	Degree
	10-375	--	0.4	4.0	
	375-750	--	0.5	4.0	
Amplitude Unbalance (±)	1-10	--	0.01	0.15	dB
	10-375	--	0.01	0.15	
	375-750	--	0.05	0.3	
VSWR (Port S)	1-750	--	1.29	--	:1
VSWR (Port 1-2)	1-750	--	1.22	--	:1

Typical Performance Data

Frequency (MHz)	Total Loss[2] (dB)		Amplitude Unbalance (dB)	Isolation (dB)	Phase Unbalance (deg.)	VSWR S	VSWR 1	VSWR 2
	S-1	S-2						
1	3.21	3.21	0.00	30.82	0.05	1.02	1.09	1.09
5	3.15	3.15	0.00	40.21	0.02	1.01	1.05	1.05
10	3.16	3.15	0.00	40.07	0.02	1.01	1.04	1.04
45	3.19	3.19	0.00	37.20	0.01	1.03	1.05	1.05
100	3.23	3.23	0.00	34.10	0.03	1.06	1.06	1.06
160	3.27	3.26	0.00	32.11	0.06	1.09	1.07	1.07
215	3.30	3.29	0.01	30.39	0.07	1.12	1.08	1.08
265	3.33	3.33	0.01	28.99	0.08	1.15	1.10	1.10
320	3.37	3.36	0.01	27.82	0.09	1.18	1.11	1.11
375	3.42	3.41	0.01	26.82	0.11	1.21	1.13	1.13
415	3.45	3.44	0.01	26.19	0.11	1.23	1.14	1.15
450	3.48	3.47	0.01	25.72	0.11	1.26	1.15	1.16
525	3.55	3.53	0.02	24.93	0.11	1.30	1.18	1.19
600	3.63	3.61	0.02	24.45	0.12	1.35	1.20	1.22
750	3.79	3.76	0.03	24.37	0.07	1.43	1.26	1.28

2. Total Loss = Insertion Loss + 3dB splitter theoretical loss.

ZFSC-2-1WDC-S+
TOTAL LOSS

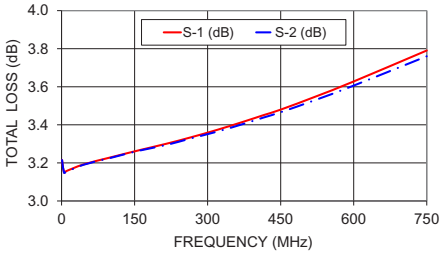

ZFSC-2-1WDC-S+
ISOLATION

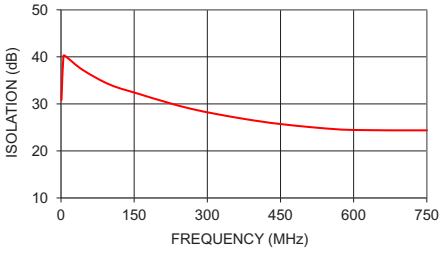

ZFSC-2-1WDC-S+
VSWR

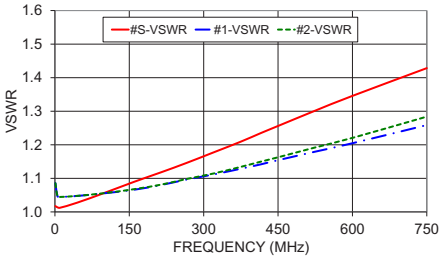

Notes

A. Performance and quality attributes and conditions not expressly stated in this specification document are intended to be excluded and do not form a part of this specification document.
B. Electrical specifications and performance data contained in this specification document are based on Mini-Circuit's applicable established test performance criteria and measurement instructions.
C. The parts covered by this specification document are subject to Mini-Circuits standard limited warranty and terms and conditions (collectively, "Standard Terms"); Purchasers of this part are entitled to the rights and benefits contained therein. For a full statement of the Standard Terms and the exclusive rights and remedies thereunder, please visit Mini-Circuits' website at www.minicircuits.com/MCLStore/terms.jsp