Coaxial

Power Splitter/Combiner

ZFSC-2-2+

2 Way-0° 50Ω 10 to 1000 MHz



Generic photo used for illustration purposes only

CASE STYLE: K18

Connectors	Model
BNC	ZFSC-2-2+
SMA	ZFSC-2-2-S+
N-TYPE	ZFSC-2-2-N+
BRACKET (OPTION "B")	

+RoHS Compliant

The +Suffix identifies RoHS Compliance. See our web site for RoHS Compliance methodologies and qualifications

Maximum Ratings

Operating Temperature	-55°C to 100°C
Storage Temperature	-55°C to 100°C
Power Input (as a splitter)	1W max.
Internal Dissipation	0.125W max.

Permanent damage may occur if any of these limits are exceeded.

Coaxial Connections

SUM PORT	3
PORT 1	1
PORT 2	2

Features

- wideband, 10 to 1000 MHz
- low insertion loss, 0.4 dB typ.
- excellent isolation, 28 dB typ.
- excellent amplitude unbalance, 0.1 dB typ.
- excellent phase unbalance, 0.5 deg. typ.
- very good return loss, VSWR, 1.2:1 typ.
- rugged shielded case

Applications

- cellular
- VHF/UHF
- instrumentation

Outline Drawing

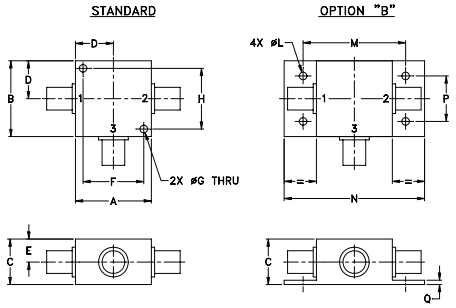

Outline Dimensions (inch / mm)

A	B	C	D	E	F	G	H
1.25	1.25	.75	.63	.38	1.00	.125	1.000
31.75	31.75	19.05	16.00	9.65	25.40	3.18	25.40

J	K	L	M	N	P	Q	wt
--	--	.125	1.688	2.18	.75	.07	grams
--	--	3.18	42.88	55.37	19.05	1.78	70.0

For option B with N-type connectors, dimension "C" increases to 0.94 inches.

Electrical Specifications

FREQ. RANGE (MHz)	ISOLATION (dB)						INSERTION LOSS (dB) ABOVE 3.0 dB						PHASE UNBALANCE (Degrees)			AMPLITUDE UNBALANCE (dB)		
	L		M		U		L		M		U		L	M	U	L	M	U
f_L-f_U	Typ.	Min.	Typ.	Min.	Typ.	Min.	Typ.	Max.	Typ.	Max.	Typ.	Max.	Max.	Max.	Max.	Max.	Max.	Max.
10-1000	30	20	25	20	23	18	0.2	0.5	0.5	1.0	0.9	1.2	2	4	4	0.15	0.15	0.30

L = low range [f_L to 10 f_L] M = mid range [10 f_L to f_U/2] U= upper range [f_U/2 to f_U]

Typical Performance Data

Frequency (MHz)	Total Loss[1] (dB)		Amplitude Unbalance (dB)	Isolation (dB)	Phase Unbalance (deg.)	VSWR S	VSWR 1	VSWR 2
	S-1	S-2						
10.00	3.15	3.14	0.01	26.42	0.03	1.08	1.15	1.15
19.00	3.14	3.15	0.00	26.49	0.01	1.08	1.15	1.15
37.00	3.13	3.14	0.01	26.85	0.03	1.08	1.15	1.15
55.00	3.16	3.15	0.01	29.63	0.06	1.09	1.13	1.13
82.00	3.16	3.17	0.01	34.12	0.00	1.09	1.11	1.11
130.00	3.18	3.19	0.01	45.87	0.00	1.11	1.11	1.11
220.00	3.25	3.28	0.03	39.11	0.03	1.15	1.13	1.13
310.00	3.29	3.31	0.02	32.63	0.15	1.19	1.15	1.16
420.00	3.30	3.34	0.04	28.93	0.22	1.24	1.18	1.19
500.00	3.37	3.38	0.01	27.48	0.37	1.27	1.20	1.22
660.00	3.45	3.45	0.00	26.48	0.31	1.29	1.23	1.25
820.00	3.47	3.50	0.03	28.28	0.87	1.26	1.24	1.27
900.00	3.50	3.54	0.04	31.36	0.87	1.23	1.24	1.28
940.00	3.59	3.68	0.08	34.52	0.52	1.20	1.24	1.28
1000.00	3.63	3.71	0.08	45.49	0.51	1.15	1.23	1.28

1. Total Loss = Insertion Loss + 3dB splitter loss.

ZFSC-2-2-S+
TOTAL LOSS

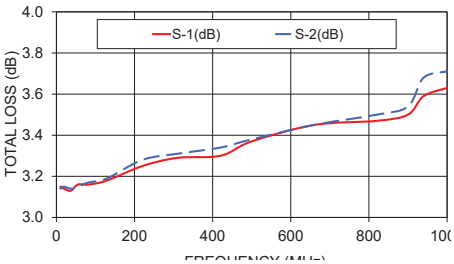

ZFSC-2-2-S+
ISOLATION

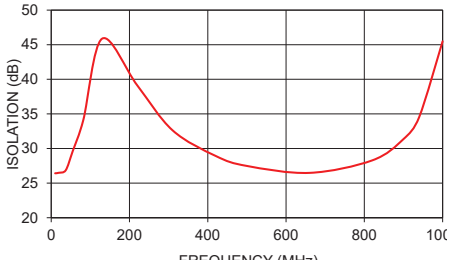

ZFSC-2-2-S+
VSWR

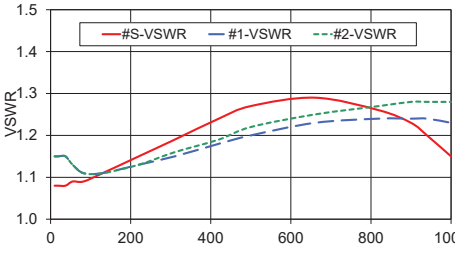

electrical schematic



Notes

A. Performance and quality attributes and conditions not expressly stated in this specification document are intended to be excluded and do not form a part of this specification document.
B. Electrical specifications and performance data contained in this specification document are based on Mini-Circuit's applicable established test performance criteria and measurement instructions.
C. The parts covered by this specification document are subject to Mini-Circuits standard limited warranty and terms and conditions (collectively, "Standard Terms"); Purchasers of this part are entitled to the rights and benefits contained therein. For a full statement of the Standard Terms and the exclusive rights and remedies thereunder, please visit Mini-Circuits' website at www.minicircuits.com/MCLStore/terms.jsp

REV. E
M151107
ZFSC-2-2+
HY/TD/CP/AM
200811

Mini-Circuits®
www.minicircuits.com P.O. Box 350166, Brooklyn, NY 11235-0003 (718) 934-4500 sales@minicircuits.com