Coaxial

Power Splitter/Combiner

ZFSC-4-1+

4 Way-0° 50Ω 1 to 1000 MHz



Generic photo used for illustration purposes only

CASE STYLE: G15

Connectors	Model
BNC	ZFSC-4-1+
SMA	ZFSC-4-1-S+
BRACKET (OPTION "B")	

+RoHS Compliant
The +Suffix identifies RoHS Compliance. See our web site for RoHS Compliance methodologies and qualifications

Maximum Ratings

Operating Temperature	-55°C to 100°C
Storage Temperature	-55°C to 100°C
Power Input (as a splitter)	1W max.
Internal Dissipation	0.250W max.

Permanent damage may occur if any of these limits are exceeded.

Coaxial Connections

SUM PORT	S
PORT 1	1
PORT 2	2
PORT 3	3
PORT 4	4

Features

- wideband, 1 to 1000 MHz
- low insertion loss, 0.6 dB typ.
- good isolation, 23 dB typ.

Applications

- cellular
- UHF
- ISM
- transmitters/receivers

Outline Drawing

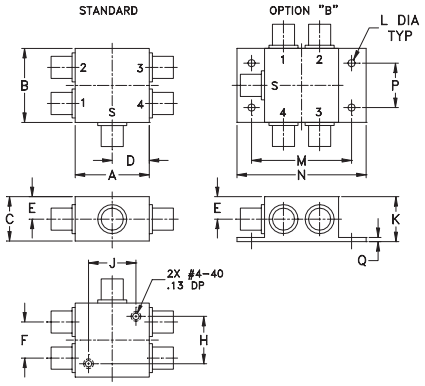

Outline Dimensions (inch / mm)

A	B	C	D	E	F	G	H
1.25	1.25	.75	.63	.38	.61	--	.80
31.75	31.75	19.05	16.00	9.65	15.49	--	20.32

J	K	L	M	N	P	Q	wt
.80	.76	.125	1.688	2.18	.75	.07	grams
20.32	19.30	3.18	42.88	55.37	19.05	1.78	85.0

Electrical Specifications

FREQ. RANGE (MHz)	ISOLATION (dB)						INSERTION LOSS (dB) ABOVE 6.0 dB						PHASE UNBALANCE (Degrees)			AMPLITUDE UNBALANCE (dB)		
	L		M		U		L		M		U		L	M	U	L	M	U
f_L-f_U	Typ.	Min.	Typ.	Min.	Typ.	Min.	Typ.	Max.	Typ.	Max.	Typ.	Max.	Max.	Max.	Max.	Max.	Max.	Max.
1-1000	25	20	23	18	20	15	0.4	1.2	0.6	1.5	1.6	2.5	4	8	8	0.2	0.4	0.7

L = low range [f_L to 10 f_L] M = mid range [10 f_L to f_U/2] U= upper range [f_U/2 to f_U]

Typical Performance Data

Freq. (MHz)	Total Loss[1] (dB)				Amp. Unbal. (dB)	Isolation (dB)			Phase Unbal. (deg.)	VSWR S	VSWR 1	VSWR 2	VSWR 3	VSWR 4
	S-1	S-2	S-3	S-4		1-2	1-4	3-4						
1.00	6.60	6.60	6.60	6.60	0.00	34.76	31.08	34.88	0.18	1.18	1.58	1.58	1.57	1.57
2.60	6.53	6.53	6.53	6.53	0.01	35.90	36.14	35.85	0.06	1.13	1.40	1.40	1.39	1.39
5.00	6.48	6.49	6.48	6.48	0.01	35.80	38.16	35.39	0.06	1.12	1.33	1.33	1.33	1.33
8.00	6.47	6.47	6.47	6.46	0.01	35.80	39.09	35.17	0.04	1.12	1.31	1.31	1.31	1.31
10.00	6.45	6.46	6.45	6.46	0.01	35.86	39.42	35.16	0.09	1.12	1.31	1.31	1.30	1.30
124.00	6.51	6.51	6.51	6.51	0.00	32.51	37.88	31.70	0.21	1.13	1.31	1.31	1.31	1.31
200.00	6.58	6.58	6.58	6.58	0.00	29.70	35.16	28.92	0.42	1.14	1.30	1.30	1.29	1.30
314.00	6.53	6.53	6.52	6.53	0.01	27.20	32.16	26.36	0.61	1.15	1.28	1.28	1.27	1.27
412.00	6.64	6.63	6.61	6.61	0.02	25.99	30.15	25.04	0.78	1.15	1.26	1.26	1.24	1.25
500.00	6.76	6.75	6.73	6.74	0.03	25.45	28.75	24.45	0.91	1.15	1.24	1.25	1.23	1.23
620.00	6.80	6.77	6.73	6.74	0.07	25.45	27.23	24.36	1.12	1.14	1.24	1.25	1.21	1.22
650.00	6.85	6.83	6.78	6.80	0.07	25.58	26.96	24.49	1.26	1.13	1.25	1.26	1.21	1.23
740.00	7.01	6.98	6.90	6.92	0.11	25.99	26.28	25.07	1.30	1.09	1.27	1.28	1.22	1.24
800.00	6.99	6.96	6.86	6.88	0.13	25.91	25.75	25.35	1.56	1.05	1.29	1.29	1.24	1.26
1000.00	7.44	7.40	7.17	7.21	0.27	23.10	24.73	24.49	2.03	1.21	1.37	1.38	1.31	1.35

1. Total Loss = Insertion Loss + 6dB splitter loss.

ZFSC-4-1+
TOTAL LOSS

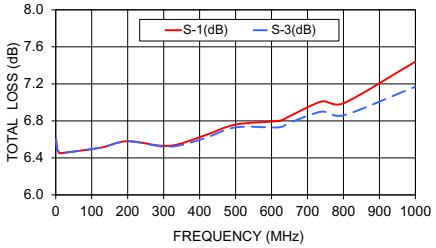

ZFSC-4-1+
ISOLATION

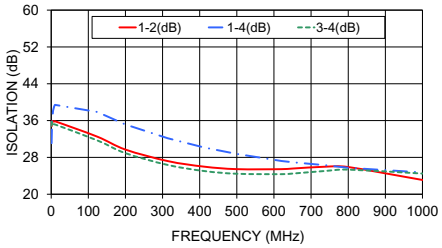

ZFSC-4-1+
VSWR

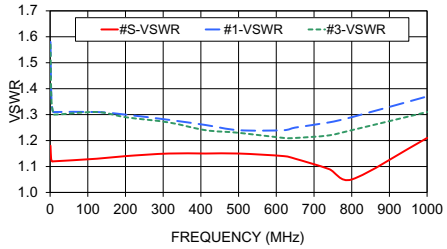

electrical schematic



Notes
A. Performance and quality attributes and conditions not expressly stated in this specification document are intended to be excluded and do not form a part of this specification document.
B. Electrical specifications and performance data contained in this specification document are based on Mini-Circuit's applicable established test performance criteria and measurement instructions.
C. The parts covered by this specification document are subject to Mini-Circuits standard limited warranty and terms and conditions (collectively, "Standard Terms"); Purchasers of this part are entitled to the rights and benefits contained therein. For a full statement of the Standard Terms and the exclusive rights and remedies thereunder, please visit Mini-Circuits' website at www.minicircuits.com/MCLStore/terms.jsp