

PCB LAYOUT (TOP VIEW)

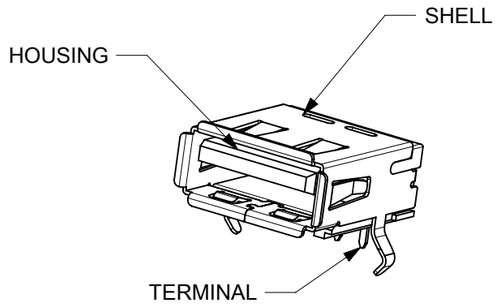

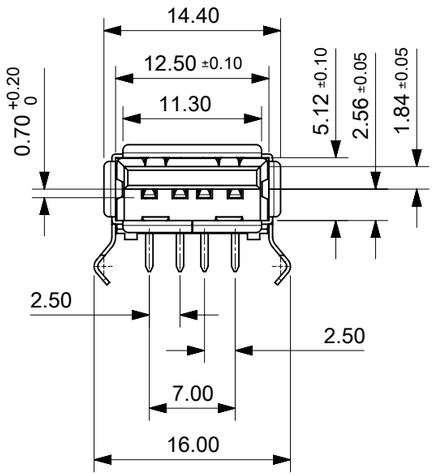

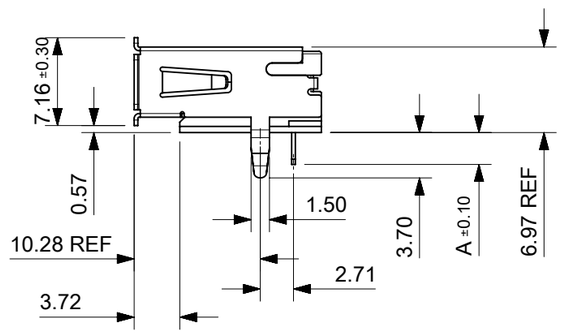

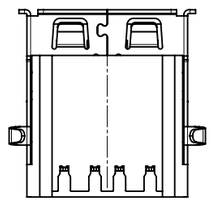

NOTES:
1. MATERIAL:
   METAL SHELL:COPPER ALLOY.
   HOUSING:SEE CHART, 30% GLASS FIBER FILLED, UL94-V0.
   TERMINAL:PHOSPHOR BRONZE

2. TERMINAL:
   CONTACT AREA:(a)GOLD FLASH.
   (b) GOLD (Au),THICKNESS=0.76µM/ 30µINCH MINIMUM.
   SOLDER TAIL:TIN PLATED,THICKNESS=1.9µM/ 75µINCH MINIMUM.
   UNDER PLATED:NICKEL (Ni),THICKNESS=1.25µM/50µINCH MINIMUM.
   METAL SHELL:SEE CHART.
3. RECOMMENDED PCB THICKNESS: SEE CHART
4. PRODUCT SPECIFICATION:FOR IR REFER TO PS-67643-002
   FOR NON IR REFER TO PS-67643-003
5. TORQE FORCE SPEC: 2.50kg-cm Min,MEASURED AT BROKEN POINT.
6. TEST SUMMARY:FOR IR REFER TO TS-67643-002
   FOR NON IR REFER TO TS-67643-003
7. PACKAGE:REFER TO PK-67643-002
8. LEAD FREE AND ROHS COMPLIANT PRODUCT

THIS DRAWING CONTAINS INFORMATION THAT IS PROPRIETARY TO MOLEX ELECTRONIC TECHNOLOGIES, LLC AND SHOULD NOT BE USED WITHOUT WRITTEN PERMISSION

DIMENSION UNITS	SCALE
mm	2:1

GENERAL TOLERANCES (UNLESS SPECIFIED)

	MM	INCH
4 PLACES	±	±
3 PLACES	±	±
2 PLACES	± 0.25	±
1 PLACE	± 0.25	±
0 PLACES	±	±
ANGULAR TOL	± 3.0 °	

DRAFT WHERE APPLICABLE MUST REMAIN WITHIN DIMENSIONS

CURRENT REV DESC:

EC NO: 775548
DRWN: KCHENG06 2024/01/30
CHK'D: HORACM1 2024/01/30
APPR: HORACM1 2024/01/30

INITIAL REVISION:
DRWN: FYANGO5 2013/12/12
APPR:

molex

USB A TYPE RECT SINGLE
RA THROUGH HOLE W/O FLG LEAD-FREE

PRODUCT CUSTOMER DRAWING

DOCUMENT NUMBER	DOC TYPE	DOC PART	REVISION
SD-67643-003	PSD	001	J

THIRD ANGLE PROJECTION	DRAWING	SERIES	MATERIAL NUMBER	CUSTOMER	SHEET NUMBER
	A3-SIZE	67643	SEE TABLE	GENERAL MARKET	1 OF 2

DOCUMENT STATUS	P1	RELEASE DATE	2024/01/30 04:44:44

FORMAT: Mel-lega-master-tb-prod-A3
REVISION: E
DATE: 2020/01/14

P/N	HOUSING MATERIAL	COLOR	CONTACT PLATING	METAL SHELL PLATING	REMARK
67643-0910	POLYESTER	BLACK	GOLD FLASH	MATTE TIN PLATED AT SOLDER TAIL AREA. THICKNESS: 50 MICROINCH MINIMUM UNDER PLATING OF NICKEL (Ni) FOR ALL OVER SURFACE THICKNESS: 50 MICROINCH MINIMUM	NON IR RPOCESEE
67643-2910	HIGH TEMPERATURE NYLON	BLACK			FOR IR REFLOW PROCESS
67643-3910	HIGH TEMPERATURE NYLON	WHITE			
67643-2911	HIGH TEMPERATURE NYLON	BLACK	0.76μM/30μINCH		FOR IR REFLOW PROCESS
67643-3911	HIGH TEMPERATURE NYLON	WHITE			
PCB THICKNESS		1.60±0.05			
DIMENSION "A"		2.60			

THIS DRAWING CONTAINS INFORMATION THAT IS PROPRIETARY TO MOLEX ELECTRONIC TECHNOLOGIES, LLC AND SHOULD NOT BE USED WITHOUT WRITTEN PERMISSION

DIMENSION UNITS	SCALE
mm	2:1

GENERAL TOLERANCES (UNLESS SPECIFIED)

	MM	INCH
4 PLACES	±	±
3 PLACES	±	±
2 PLACES	± 0.25	±
1 PLACE	± 0.25	±
0 PLACES	±	±
ANGULAR TOL	± 3.0 °	

DRAFT WHERE APPLICABLE MUST REMAIN WITHIN DIMENSIONS

CURRENT REV DESC:

EC NO: 775548
DRWN: KCHENG06 2024/01/30
CHK'D: HORACM1 2024/01/30
APPR: HORACM1 2024/01/30

INITIAL REVISION:
DRWN: FYANGO5 2013/12/12
APPR:

molex

USB A TYPE RECT SINGLE
RA THROUGH HOLE W/O FLG LEAD-FREE

PRODUCT CUSTOMER DRAWING

DOCUMENT NUMBER	DOC TYPE	DOC PART	REVISION
SD-67643-003	PSD	001	J

THIRD ANGLE PROJECTION	DRAWING	SERIES	MATERIAL NUMBER	CUSTOMER	SHEET NUMBER
	A3-SIZE	67643	SEE TABLE	GENERAL MARKET	2 OF 2

DOCUMENT STATUS	P1	RELEASE DATE	2024/01/30 04:44:44

FORMAT: Met-lega-master-tb-prod-A3
REVISION: E
DATE: 2020/01/14