3D MODEL : 1000177200 PSM ASY

BASE CAGE DETAILS SHOWN

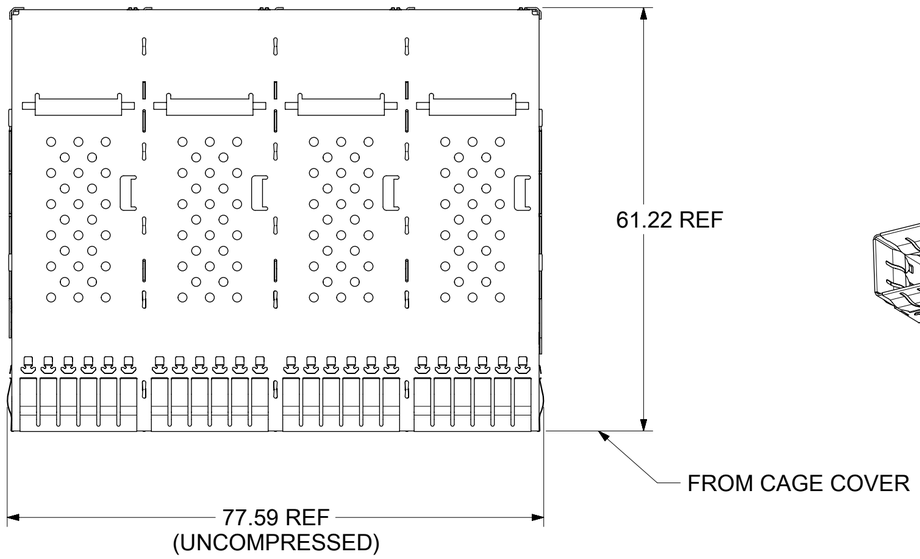

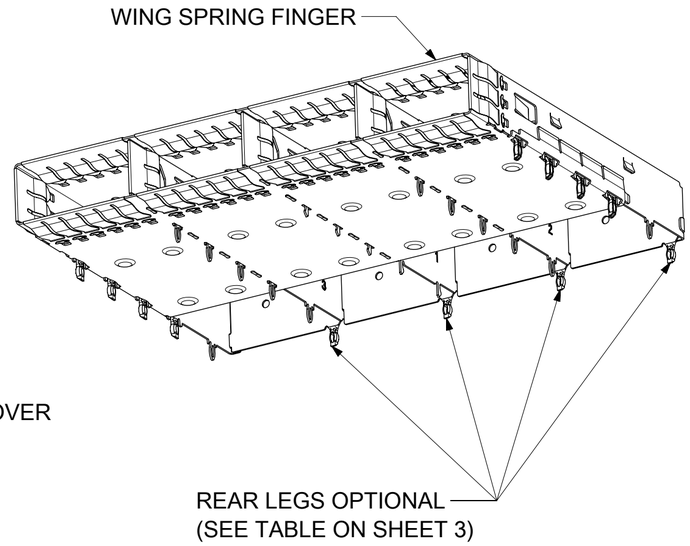

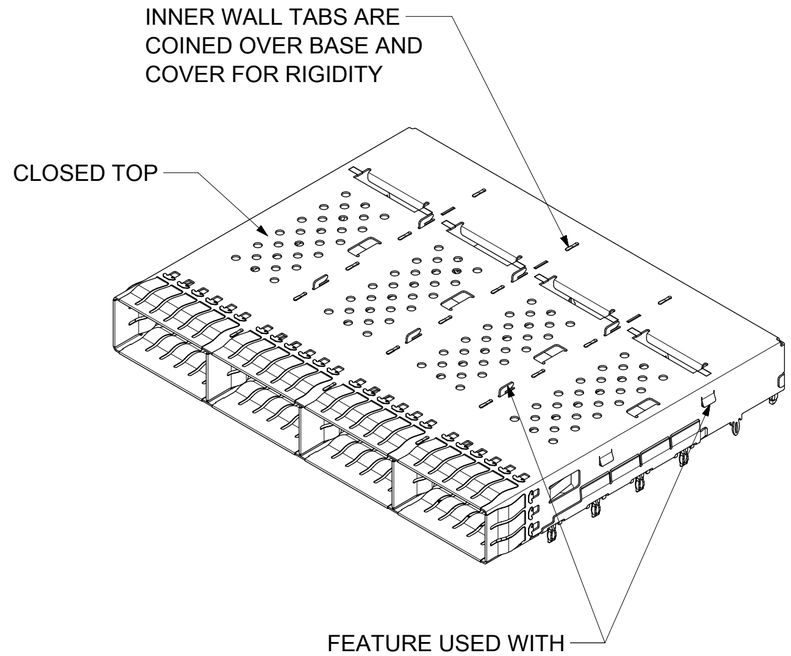

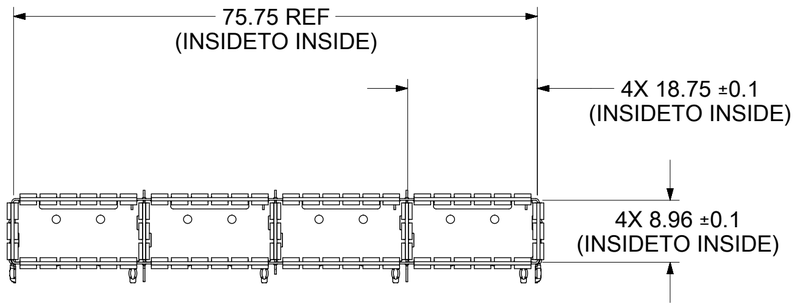

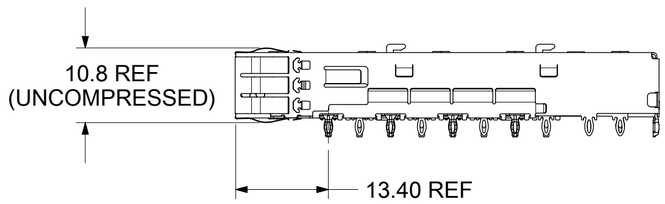

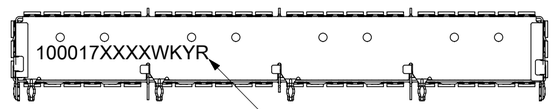

P/N AND WEEK/YEAR DATE CODE TO BE PRINTED ON BACK OF COMPLETED CAGE ASSEMBLY APPROXIMATELY AS SHOWN. SEE TABLE BELOW FOR DATE CODE INFORMATION

WEEK/YEAR DATE CODE TABLE	
WK	WEEK OF THE YEAR 01 THRU 52 (EXAMPLE: 01= FIRST WEEK OF YEAR 52= LAST WEEK OF YEAR
YP	16, 17, 18 ETC.. (EXAMPLE: YEAR 2016= 16)

NOTES:
1. MATERIAL: CAGE: STAINLESS STEEL
   CENTER WALLS: STAINLESS STEEL
   WING SPRING FINGERS: STAINLESS STEEL
   HEAT SINKS: NICKEL PLATED ALUMINUM
   HEAT SINK CLIP: STAINLESS STEEL
   LIGHT PIPES: POLYCARBONATE (UL 94-V-0)
2. DRAWING APPLIES TO ALL P/N'S SHOWN ON PAGE 3
3. DURING FINAL INSPECTION, CAGE LEG LOCATIONS AND STRAIGHTNESS MUST BE CHECKED USING APPROPRIATE GO - NO GO GAGE
4. DURING FINAL INSPECTION, CAGE MUST BE INSPECTED TO MAKE SURE LEG CONFIGURATIONS AND PART NUMBERS ARE CORRECT, USE SHEETS 3, 4 AND 5
5. PARTS TO BE INSPECTED PER MOLEX COSMETIC SPEC WI-HP-7-2774 (CLASS B UNLESS OTHERWISE SPECIFIED)
6. PRESS-FIT LEGS 2.44 LONG -
   1.57 MINIMUM PCB THICKNESS FOR SINGLE SIDED USE.
   2.70 MINIMUM PCB THICKNESS FOR BELLY TO BELLY USE.
7. NO RoHS EXEMPTIONS

DOCUMENT STATUS	P1	RELEASE DATE	2023/02/24 09:13:41

THIS DRAWING CONTAINS INFORMATION THAT IS PROPRIETARY TO MOLEX ELECTRONIC TECHNOLOGIES, LLC AND SHOULD NOT BE USED WITHOUT WRITTEN PERMISSION

DIMENSION UNITS	SCALE
mm	1.5:1

GENERAL TOLERANCES (UNLESS SPECIFIED)

ANGULAR TOL	±	2.0 °
4 PLACES	±	
3 PLACES	±	
2 PLACES	±	0.13
1 PLACE	±	0.25
0 PLACES	±	

DRAFT WHERE APPLICABLE MUST REMAIN WITHIN DIMENSIONS

CURRENT REV DESC: REMOVED OBSOLETED PART NUMBER AS PER PCN#511691.

EC NO:	737858	
DRWN:	SANTHN	2023/02/08
CHK'D:	GGA	2023/02/24
APPR:	GGA	2023/02/24

INITIAL REVISION:

DRWN:	SJKG	2016/09/26
APPR:	RCHEN08	2016/11/29

molex

ZQSFP+ 1X4 GANGED CAGE ASSEMBLY
WING SPRING FINGER WITH H/S & LP OPTIONS

PRODUCT CUSTOMER DRAWING

DOCUMENT NUMBER	DOC TYPE	DOC PART	REVISION
1000177200	PSD	ASY	A3

THIRD ANGLE PROJECTION	DRAWING	SERIES	MATERIAL NUMBER	CUSTOMER	SHEET NUMBER
	C-SIZE	100017	SEE TABLE	GENERAL MARKET	1 OF 9

CAGE ASSEMBLY OPTIONS

1000177547

SHOWN

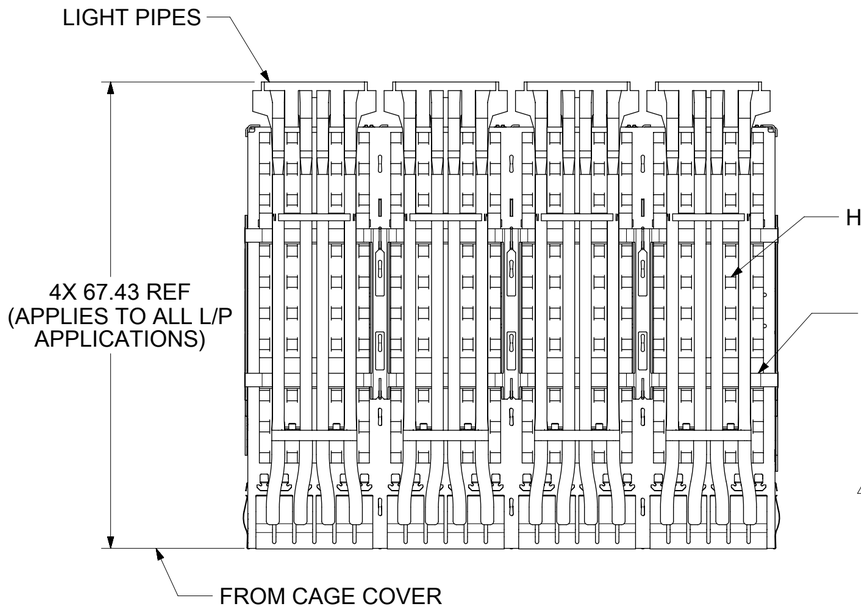

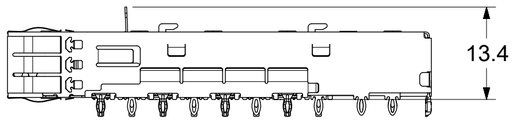

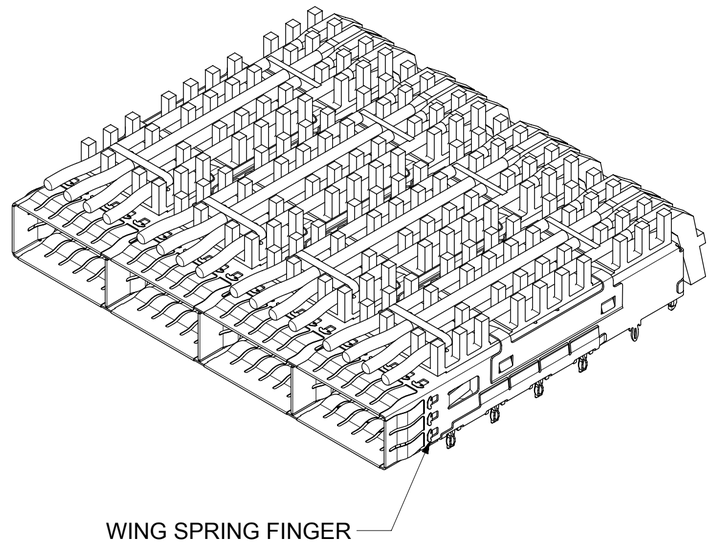

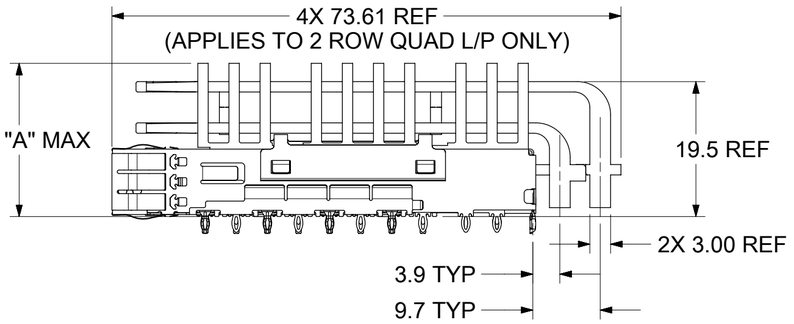

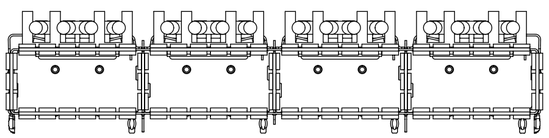

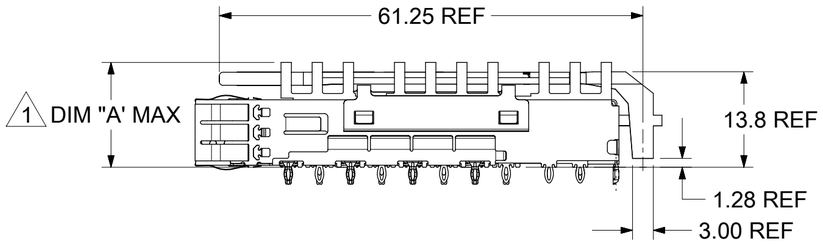

REAR LEG OPTIONS

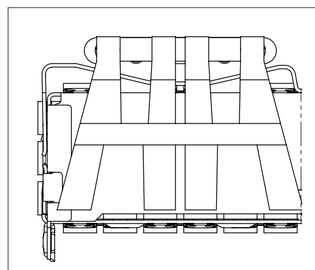

0 REAR LEGS
PARTIAL 1
SCALE 3:1

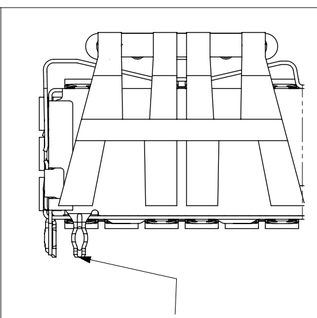

1 REAR LEGS
PARTIAL 2
SCALE 3:1

HEAT SINK AND LIGHT PIPE COMBINATIONS

HEAT SINK USED WITHOUT LIGHTPIPE

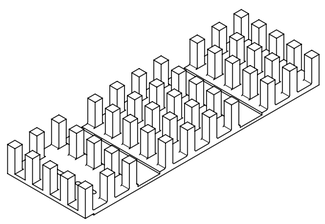

SINGLE / DUAL LIGHT PIPE

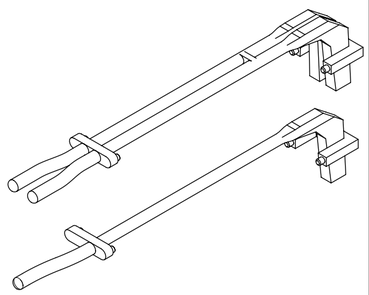

HEAT SINK

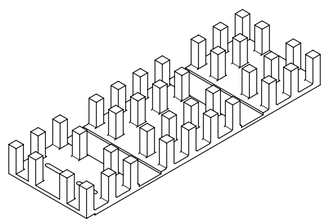

QUAD LIGHT PIPE

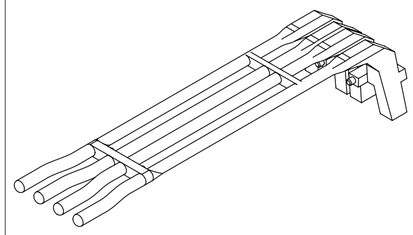

HEAT SINK

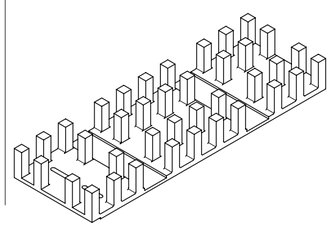

2 ROW QUAD LIGHT PIPE

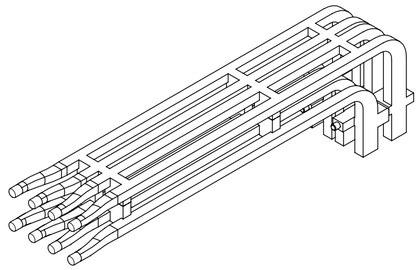

HEAT SINK

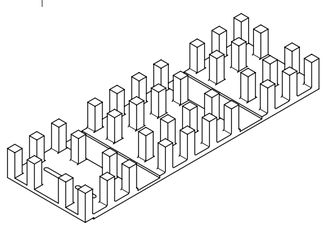

HEAT SINK HEIGHT OPTIONS

OVERALL HEAT SINK HEIGHT	DIM"A"
PCI	13.7
SAN	16.0
NET	23.0

1 HEIGHT OF HEAT SINK WITH MODULE INSERTED.
DIMENSION MAY BE LESS DUE TO MODULE AND HEAT SINK VARIATIONS

THIS DRAWING CONTAINS INFORMATION THAT IS PROPRIETARY TO MOLEX ELECTRONIC TECHNOLOGIES, LLC AND SHOULD NOT BE USED WITHOUT WRITTEN PERMISSION

DIMENSION UNITS	SCALE
mm	1.5:1

GENERAL TOLERANCES (UNLESS SPECIFIED)

ANGULAR TOL	±	2.0 °
4 PLACES	±	
3 PLACES	±	
2 PLACES	±	0.13
1 PLACE	±	0.25
0 PLACES	±	

DRAFT WHERE APPLICABLE MUST REMAIN WITHIN DIMENSIONS

CURRENT REV DESC: REMOVED OBSOLETED PART NUMBER AS PER PCN#511691.

EC NO: 737858
DRWN: SANTHN 2023/02/08
CHK'D: GGA 2023/02/24
APPR: GGA 2023/02/24

INITIAL REVISION:
DRWN: SJKG 2016/09/26
APPR: RCHEN08 2016/11/29

molex

ZQSFP+ 1X4 GANGED CAGE ASSEMBLY
WING SPRING FINGER WITH H/S & LP OPTIONS

PRODUCT CUSTOMER DRAWING

THIRD ANGLE PROJECTION	DRAWING	SERIES	MATERIAL NUMBER	CUSTOMER	SHEET NUMBER
	C-SIZE	100017	SEE TABLE	GENERAL MARKET	2 OF 9

DOCUMENT NUMBER	DOC TYPE	DOC PART	REVISION
1000177200	PSD	ASY	A3

DOCUMENT STATUS	P1	RELEASE DATE	2023/02/24 09:13:41

PART NUMBER SELECTION

NO HEAT SINKS
WITH LIGHT PIPES
CLOSED TOP

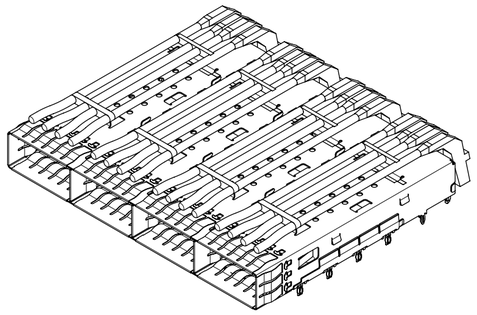

MOLEX P/N	LIGHT PIPES	#OF REAR LEGS PER PORT
1000177231	SINGLE	0
1000177232	SINGLE	1
1000177233	DUAL	0
1000177234	DUAL	1
1000177235	QUAD	0
1000177236	QUAD	1

NO HEAT SINKS
NO LIGHT PIPES
CLOSED TOP

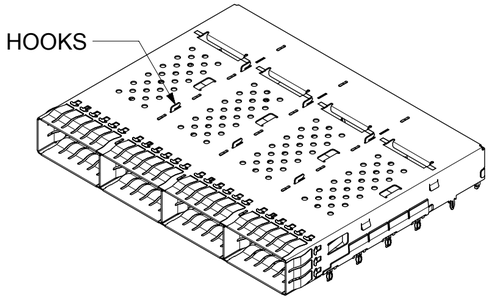

MOLEX P/N	#OF REAR LEGS PER PORT	HOOKS
1000177242	1	YES

NO HEAT SINKS
NO LIGHT PIPES
OPEN TOP

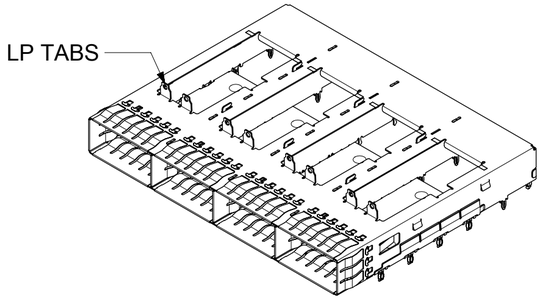

MOLEX P/N	#OF REAR LEGS PER PORT	LP TAB
1000177250	0	YES
1000177252	1	YES
1000177255	1	NO

WITH HEAT SINKS
NO LIGHT PIPES

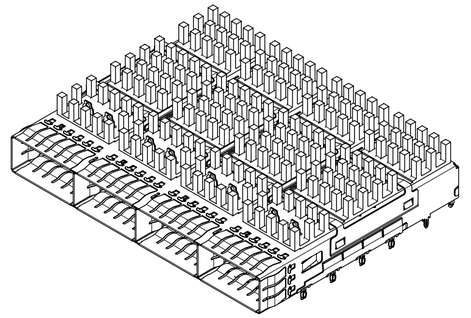

MOLEX P/N	HEAT SINK	#OF REAR LEGS PER PORT
1000177340	PCI	0
1000177341	SAN	0
1000177342	NET	0
1000177343	PCI	1
1000177344	SAN	1
1000177345	NET	1

WITH HEAT SINKS AND LIGHT PIPES

MOLEX P/N	LIGHT PIPES	HEAT SINKS	#OF REAR LEGS PER PORT
1000177440	SINGLE	PCI	0
1000177441	SINGLE	SAN	0
1000177442	SINGLE	NET	0
1000177443	DUAL	PCI	0
1000177444	DUAL	SAN	0
1000177445	DUAL	NET	0
1000177446	QUAD	PCI	0
1000177447	QUAD	SAN	0
1000177448	QUAD	NET	0
1000177540	SINGLE	PCI	1
1000177541	SINGLE	SAN	1
1000177542	SINGLE	NET	1
1000177543	DUAL	PCI	1
1000177544	DUAL	SAN	1
1000177545	DUAL	NET	1
1000177546	QUAD	PCI	1
1000177547	QUAD	SAN	1
1000177548	QUAD	NET	1
1000177647	2 ROW QUAD	SAN	1
1000177648	2 ROW QUAD	NET	1
1000177649	2 ROW QUAD	CUSTOM (A=19.0REF)	1

SINGLE LIGHT PIPE

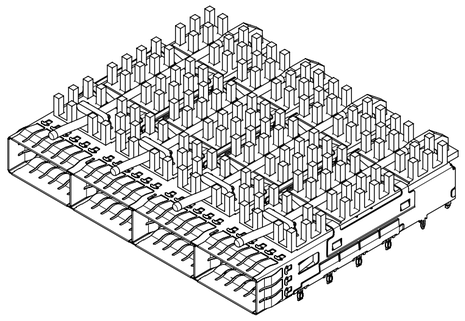

DUAL LIGHT PIPE

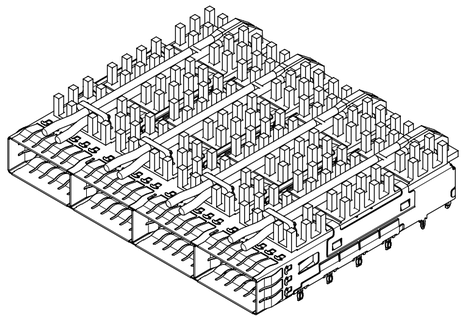

QUAD LIGHT PIPE

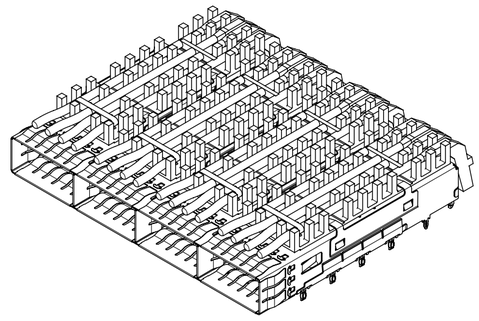

2 ROW QUAD LIGHT PIPE

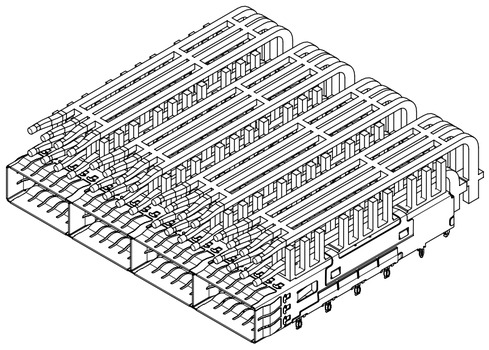

THIS DRAWING CONTAINS INFORMATION THAT IS PROPRIETARY TO MOLEX ELECTRONIC TECHNOLOGIES, LLC AND SHOULD NOT BE USED WITHOUT WRITTEN PERMISSION

DIMENSION UNITS	mm
SCALE	1:1
GENERAL TOLERANCES (UNLESS SPECIFIED)	
ANGULAR TOL	± 2.0 °
4 PLACES	±
3 PLACES	±
2 PLACES	± 0.13
1 PLACE	± 0.25
0 PLACES	±
DRAFT WHERE APPLICABLE MUST REMAIN WITHIN DIMENSIONS	

CURRENT REV DESC: REMOVED OBSOLETED PART NUMBER AS PER PCN#511691.

EC NO: 737858
DRWN: SANTHN 2023/02/08
CHK'D: GGA 2023/02/24
APPR: GGA 2023/02/24

INITIAL REVISION:
DRWN: SJKG 2016/09/26
APPR: RCHEN08 2016/11/29

molex

ZQSFP+ 1X4 GANGED CAGE ASSEMBLY
WING SPRING FINGER WITH H/S & LP OPTIONS

PRODUCT CUSTOMER DRAWING

DOCUMENT NUMBER	DOC TYPE	DOC PART	REVISION
1000177200	PSD	ASY	A3

THIRD ANGLE PROJECTION	DRAWING	SERIES	MATERIAL NUMBER	CUSTOMER	SHEET NUMBER
	C-SIZE	100017	SEE TABLE	GENERAL MARKET	3 OF 9

DOCUMENT STATUS	P1	RELEASE DATE	2023/02/24 09:13:41

PCB LAYOUT FOR SINGLE SIDED MOUNTING

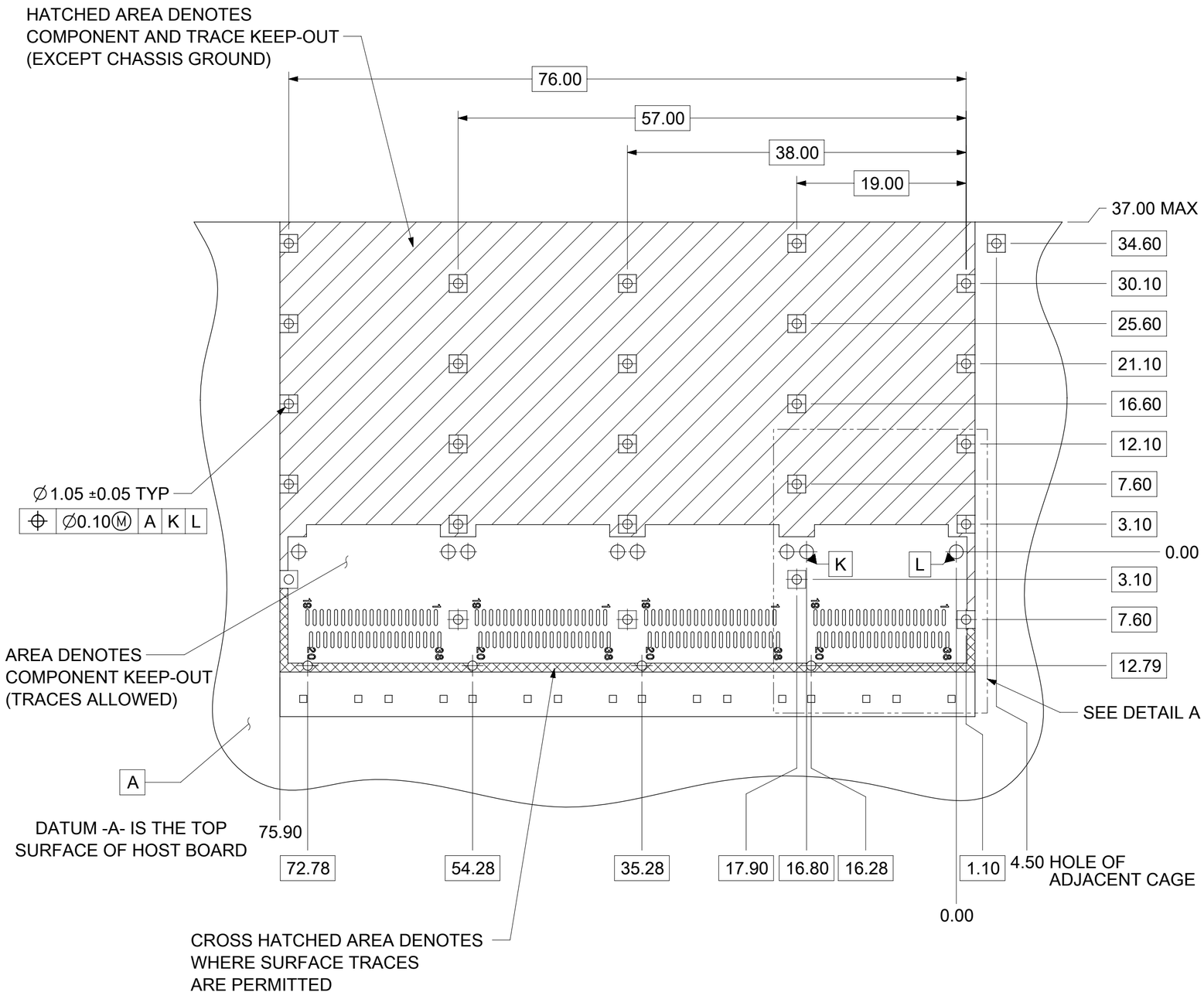

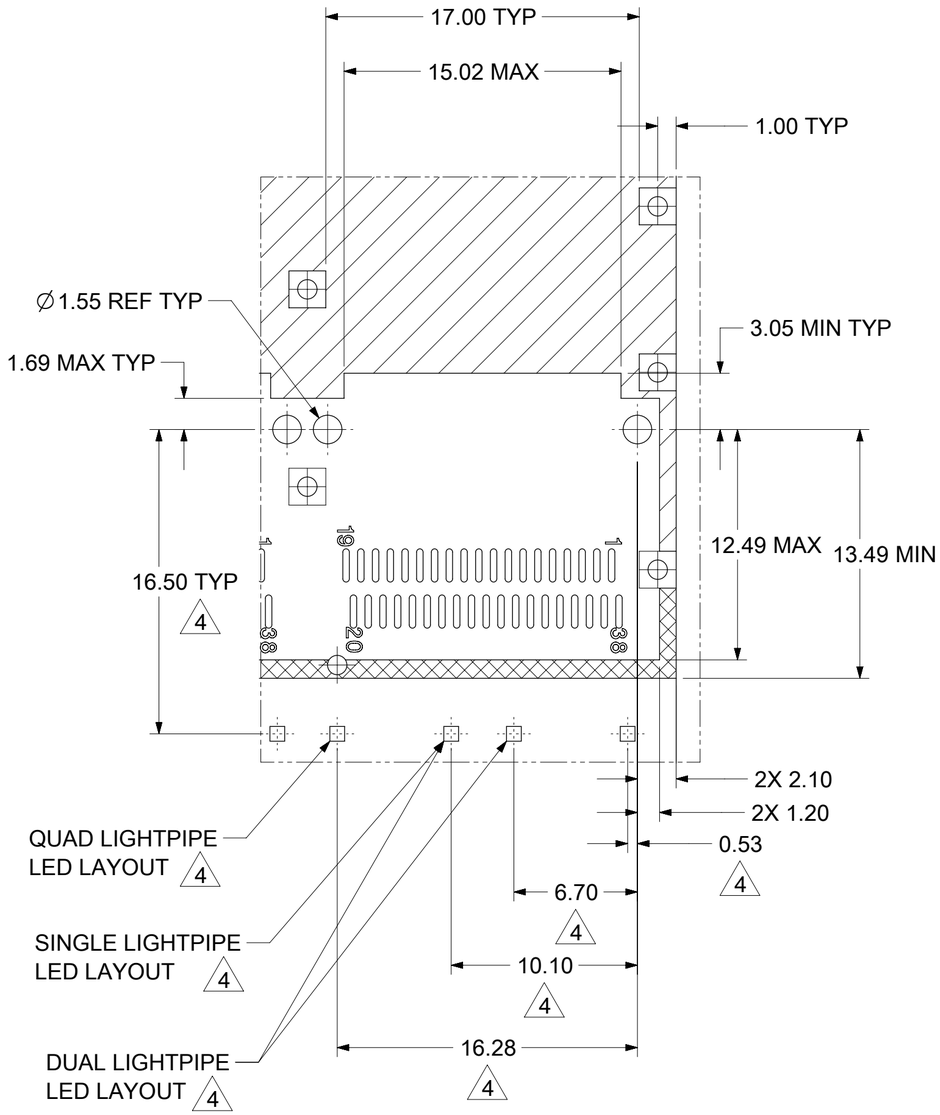

DETAIL A
SCALE 4:1

NOTES:
1. PADS AND VIAS GO TO CHASSIS GROUND. (RECOMMENDED PADS TO BE 2.00mm SQUARE.)
2. RECOMMENDED THRU HOLE PLATING INCLUDES HASL, OSP, OR IMMERSION (GOLD, SILVER, OR TIN).
3. CONNECTOR PAD LAYOUT PER SFF-8663 WILL ACCOMODATE MOLEX CONNECTOR SERIES 170432.
4. NOTED DIMENSIONS ONLY APPLY TO CAGE ASSEMBLIES WITH LIGHT PIPES.

DOCUMENT STATUS	P1	RELEASE DATE	2023/02/24 09:13:41

THIS DRAWING CONTAINS INFORMATION THAT IS PROPRIETARY TO MOLEX ELECTRONIC TECHNOLOGIES, LLC AND SHOULD NOT BE USED WITHOUT WRITTEN PERMISSION

DIMENSION UNITS	SCALE
mm	2.5:1

GENERAL TOLERANCES (UNLESS SPECIFIED)

ANGULAR TOL	± 2.0 °
4 PLACES	±
3 PLACES	±
2 PLACES	± 0.13
1 PLACE	± 0.25
0 PLACES	±

DRAFT WHERE APPLICABLE MUST REMAIN WITHIN DIMENSIONS

CURRENT REV DESC: REMOVED OBSOLETED PART NUMBER AS PER PCN#511691.

EC NO: 737858
DRWN: SANTHN 2023/02/08
CHK'D: GGA 2023/02/24
APPR: GGA 2023/02/24

INITIAL REVISION:
DRWN: SJKG 2016/09/26
APPR: RCHEN08 2016/11/29

molex

ZQSFP+ 1X4 GANGED CAGE ASSEMBLY
WING SPRING FINGER WITH H/S & LP OPTIONS

PRODUCT CUSTOMER DRAWING

DOCUMENT NUMBER	DOC TYPE	DOC PART	REVISION
1000177200	PSD	ASY	A3

THIRD ANGLE PROJECTION	DRAWING	SERIES	MATERIAL NUMBER	CUSTOMER	SHEET NUMBER
	C-SIZE	100017	SEE TABLE	GENERAL MARKET	4 OF 9

PCB LAYOUT FOR BELLY TO BELLY MOUNTING

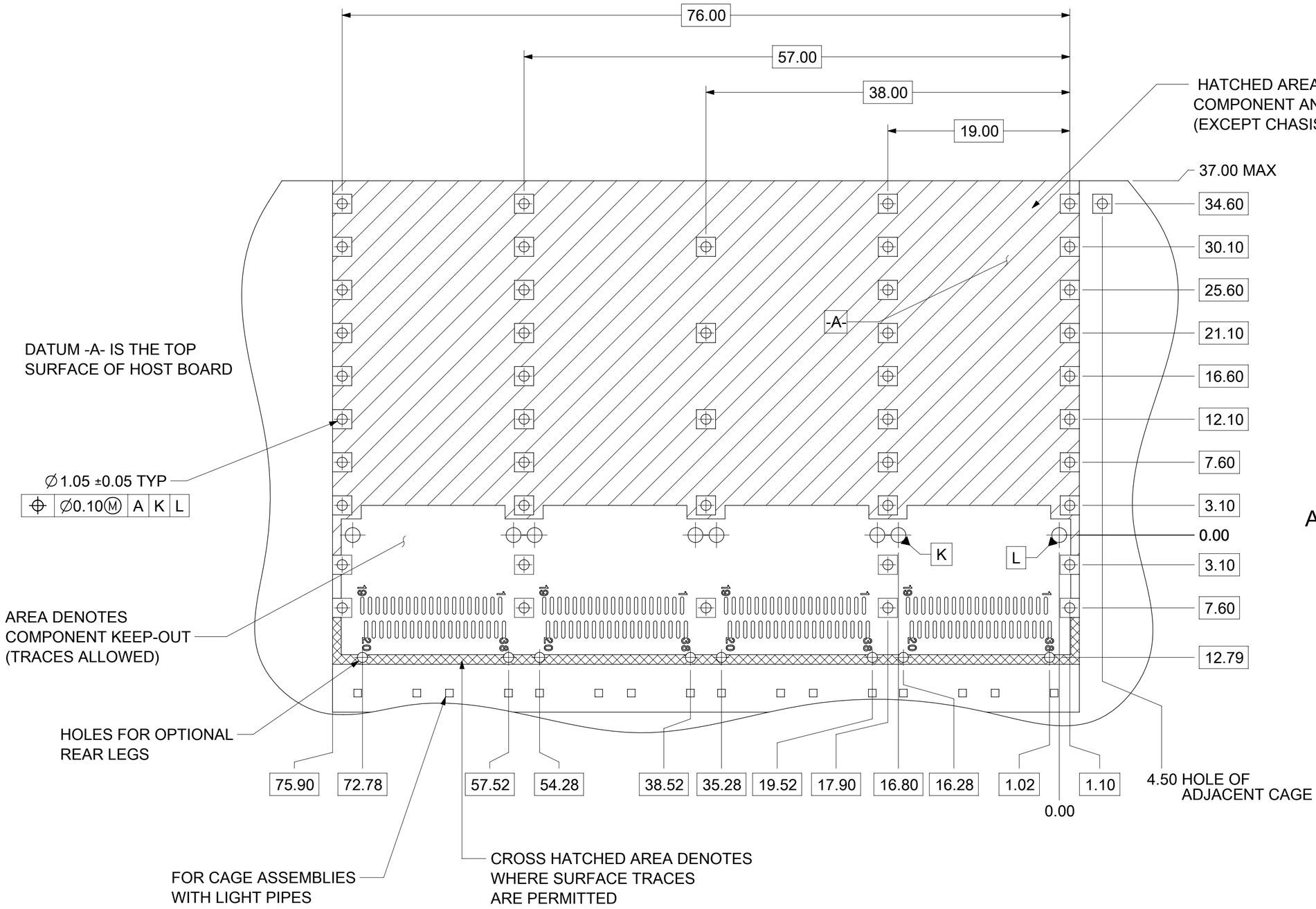

NOTE:
SEE SHEET 4 FOR
HOST CONNECTOR DETAIL
AND LED LOCATION DETAILS

NOTES:
1. PADS AND VIAS GO TO CHASSIS GROUND. (RECOMMENDED PADS TO BE 2.00mm SQUARE.)
2. RECOMMENDED THRU HOLE PLATING INCLUDES HASL, OSP, OR IMMERSION (GOLD, SILVER, OR TIN).
3. CONNECTOR PAD LAYOUT PER SFF-8663 WILL ACCOMODATE MOLEX CONNECTOR SERRIES 170432.

DOCUMENT STATUS	P1	RELEASE DATE	2023/02/24 09:13:41

THIS DRAWING CONTAINS INFORMATION THAT IS PROPRIETARY TO MOLEX ELECTRONIC TECHNOLOGIES, LLC AND SHOULD NOT BE USED WITHOUT WRITTEN PERMISSION

DIMENSION UNITS	SCALE
mm	3:1

GENERAL TOLERANCES (UNLESS SPECIFIED)

ANGULAR TOL	±	2.0 °
4 PLACES	±	
3 PLACES	±	
2 PLACES	±	0.13
1 PLACE	±	0.25
0 PLACES	±	

DRAFT WHERE APPLICABLE MUST REMAIN WITHIN DIMENSIONS

CURRENT REV DESC: REMOVED OBSOLETED PART NUMBER AS PER PCN#511691.

EC NO: 737858
DRWN: SANTHN 2023/02/08
CHK'D: GGA 2023/02/24
APPR: GGA 2023/02/24

INITIAL REVISION:
DRWN: SJKG 2016/09/26
APPR: RCHEN08 2016/11/29

THIRD ANGLE PROJECTION | DRAWING: C-SIZE | SERIES: 100017

molex

ZQSFP+ 1X4 GANGED CAGE ASSEMBLY
WING SPRING FINGER WITH H/S & LP OPTIONS

PRODUCT CUSTOMER DRAWING

DOCUMENT NUMBER	DOC TYPE	DOC PART	REVISION
1000177200	PSD	ASY	A3

MATERIAL NUMBER	CUSTOMER	SHEET NUMBER
SEE TABLE	GENERAL MARKET	5 OF 9

LED PLACEMENT FOR 2 ROW QUAD LIGHT PIPE

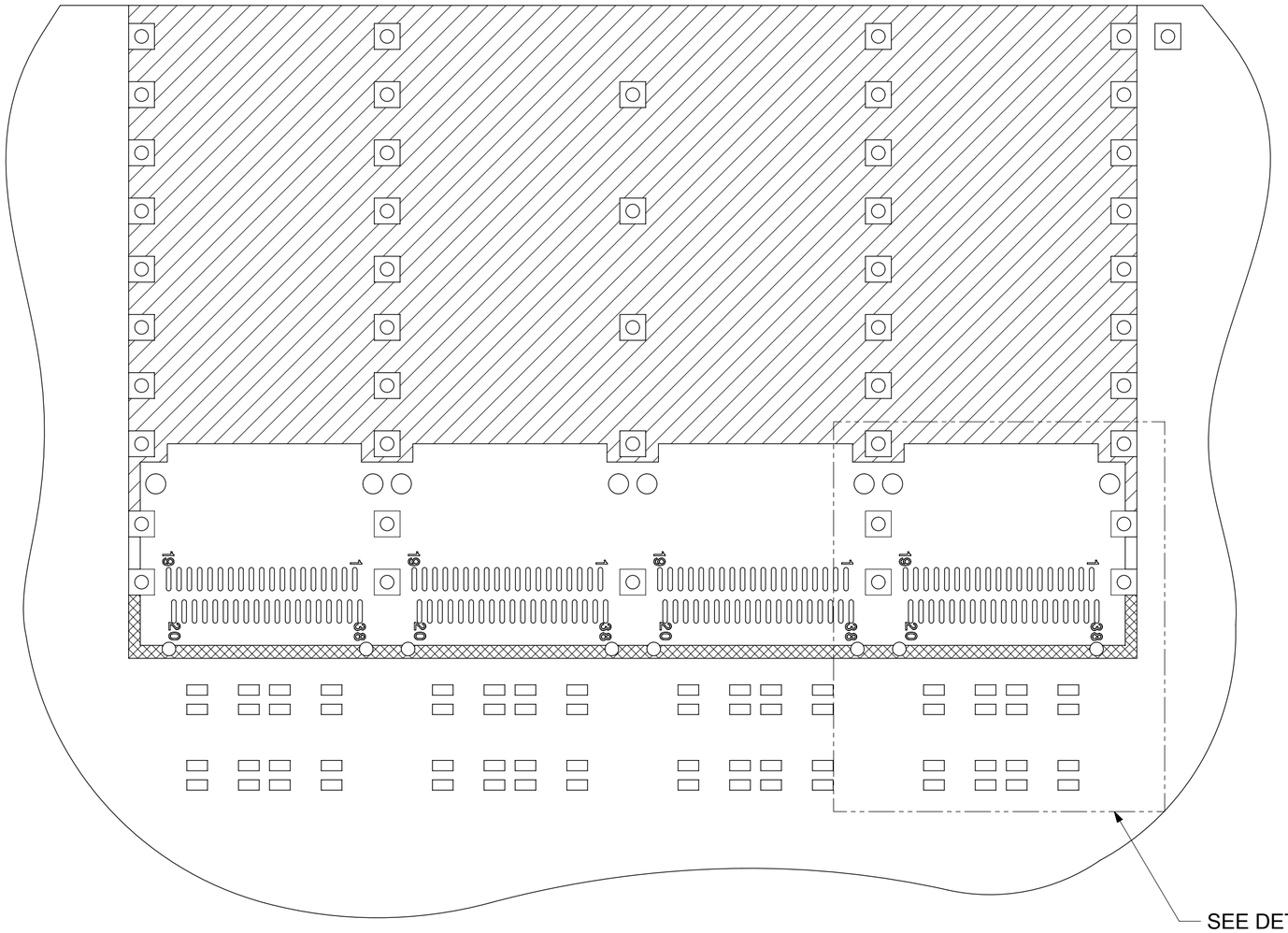

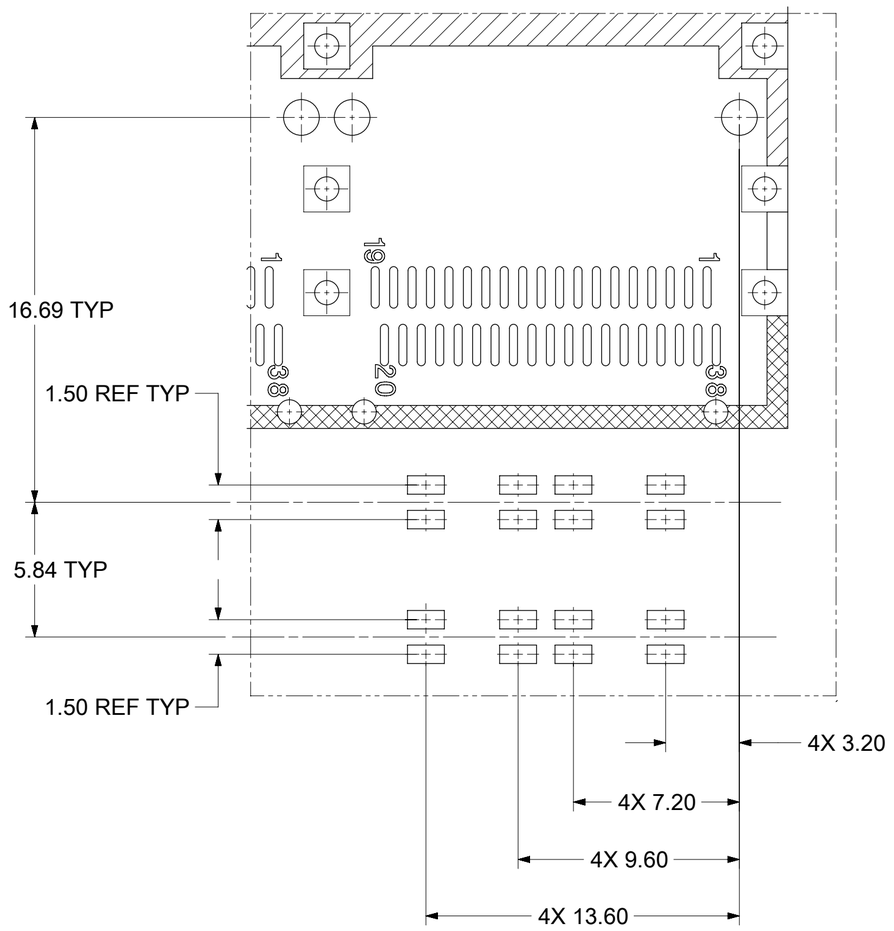

DETAIL 1
SCALE 5:1

NOTE:
SEE SHEET 4 FOR
HOST CONNECTOR DETAIL

THIS DRAWING CONTAINS INFORMATION THAT IS PROPRIETARY TO MOLEX ELECTRONIC TECHNOLOGIES, LLC AND SHOULD NOT BE USED WITHOUT WRITTEN PERMISSION

DIMENSION UNITS: mm	SCALE: 3:1	CURRENT REV DESC: REMOVED OBSOLETED PART NUMBER AS PER PCN#511691.	molex
GENERAL TOLERANCES (UNLESS SPECIFIED)			ZQSFP+ 1X4 GANGED CAGE ASSEMBLY WING SPRING FINGER WITH H/S & LP OPTIONS
ANGULAR TOL ± 2.0 °		EC NO: 737858	
4 PLACES ±		DRWN: SANTHN 2023/02/08	PRODUCT CUSTOMER DRAWING
3 PLACES ±		CHK'D: GGA 2023/02/24	
2 PLACES ± 0.13		APPR: GGA 2023/02/24	DOCUMENT NUMBER: 1000177200 / DOC TYPE: PSD / DOC PART: ASY / REVISION: A3
1 PLACE ± 0.25		INITIAL REVISION:	
0 PLACES ±		DRWN: SJKG 2016/09/26	
DRAFT WHERE APPLICABLE MUST REMAIN WITHIN DIMENSIONS		APPR: RCHEN08 2016/11/29	
THIRD ANGLE PROJECTION	DRAWING: C-SIZE	SERIES: 100017	MATERIAL NUMBER: SEE TABLE / CUSTOMER: GENERAL MARKET / SHEET NUMBER: 6 OF 9

DOCUMENT STATUS	P1	RELEASE DATE	2023/02/24 09:13:41

BEZEL AND BOARD POSITION DIMENSIONS FOR SINGLE SIDE MOUNTING

SINGLE LIGHT PIPE △2

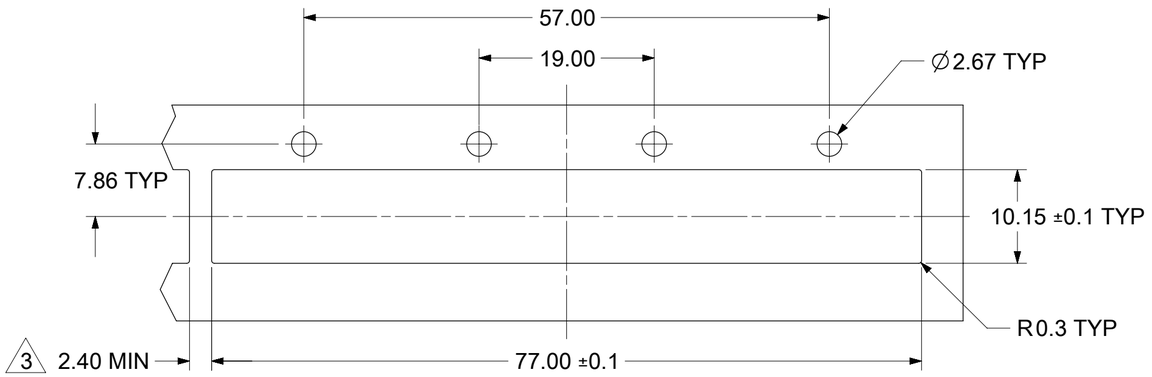

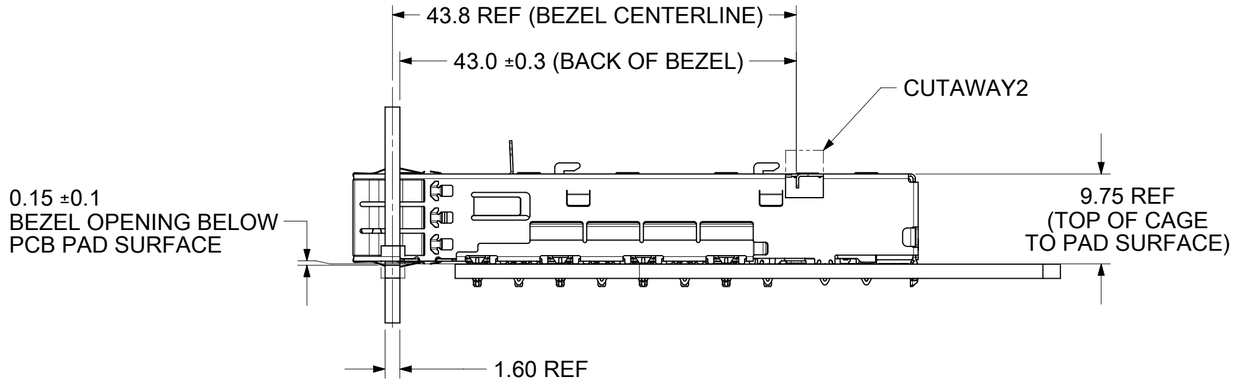

DUAL/QUAD LIGHT PIPE △2

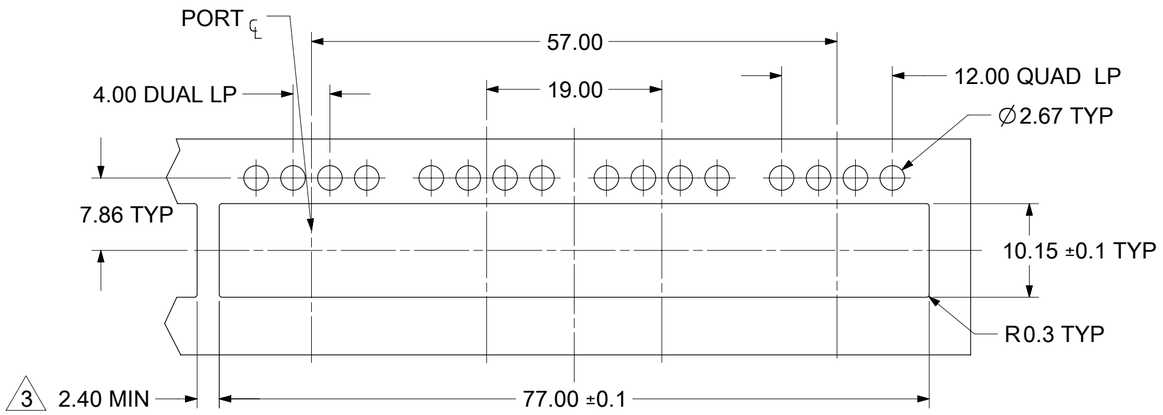

2 ROW QUAD LIGHT PIPE △2

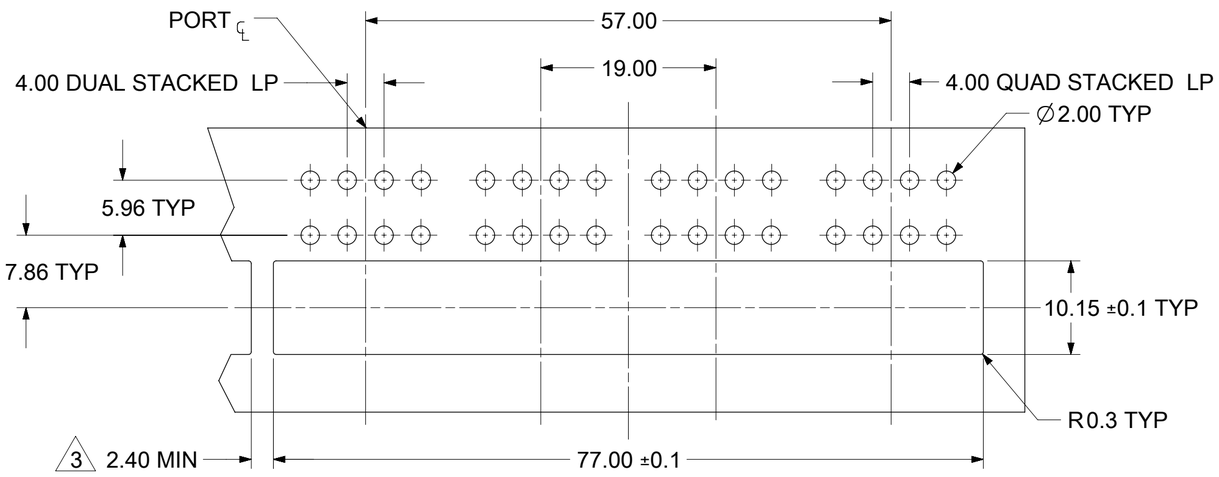

NOTE:
1. PCB THICKNESS VARIATION MUST BE CONSIDERED WHEN DETERMINING BEZEL OPENING LOCATION.
△2. NOTED DIMENSIONS ONLY APPLY TO CAGE ASSEMBLIES WITH LIGHT PIPES.
△3. THIS DIMENSION IS FOR REFERENCE ONLY. USER CAN MODIFY IT DEPENDS ON APPLICATION. (THIS DIMENSION VARIES BASED ON DISTANCE OF "HOLE OF ADJACENT CAGE" ON PCB LAYOUT.)

DOCUMENT STATUS	P1	RELEASE DATE	2023/02/24 09:13:41

THIS DRAWING CONTAINS INFORMATION THAT IS PROPRIETARY TO MOLEX ELECTRONIC TECHNOLOGIES, LLC AND SHOULD NOT BE USED WITHOUT WRITTEN PERMISSION

DIMENSION UNITS	SCALE
mm	2:1

GENERAL TOLERANCES (UNLESS SPECIFIED)

ANGULAR TOL	±	2.0 °
4 PLACES	±	
3 PLACES	±	
2 PLACES	±	0.13
1 PLACE	±	0.25
0 PLACES	±	

DRAFT WHERE APPLICABLE MUST REMAIN WITHIN DIMENSIONS

CURRENT REV DESC: REMOVED OBSOLETED PART NUMBER AS PER PCN#511691.

EC NO: 737858
DRWN: SANTHN 2023/02/08
CHK'D: GGA 2023/02/24
APPR: GGA 2023/02/24

INITIAL REVISION:
DRWN: SJKG 2016/09/26
APPR: RCHEN08 2016/11/29

THIRD ANGLE PROJECTION | DRAWING: C-SIZE | SERIES: 100017

molex

ZQSFP+ 1X4 GANGED CAGE ASSEMBLY
WING SPRING FINGER WITH H/S & LP OPTIONS

PRODUCT CUSTOMER DRAWING

DOCUMENT NUMBER	DOC TYPE	DOC PART	REVISION
1000177200	PSD	ASY	A3

MATERIAL NUMBER	CUSTOMER	SHEET NUMBER
SEE TABLE	GENERAL MARKET	7 OF 9

BEZEL AND BOARD POSITION DIMENSIONS FOR BELLY TO BELLY MOUNTING

SINGLE LIGHT PIPE △2

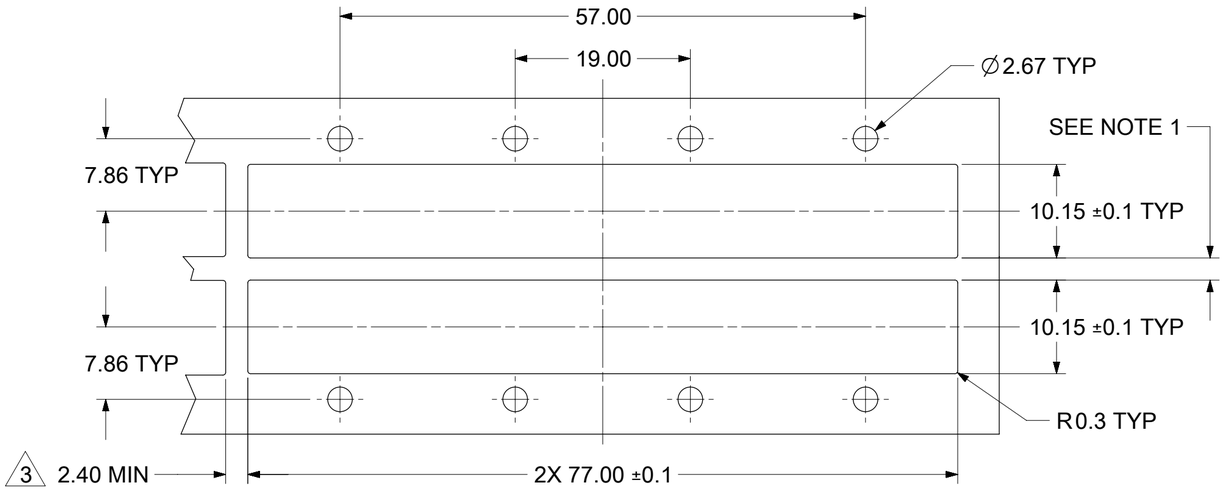

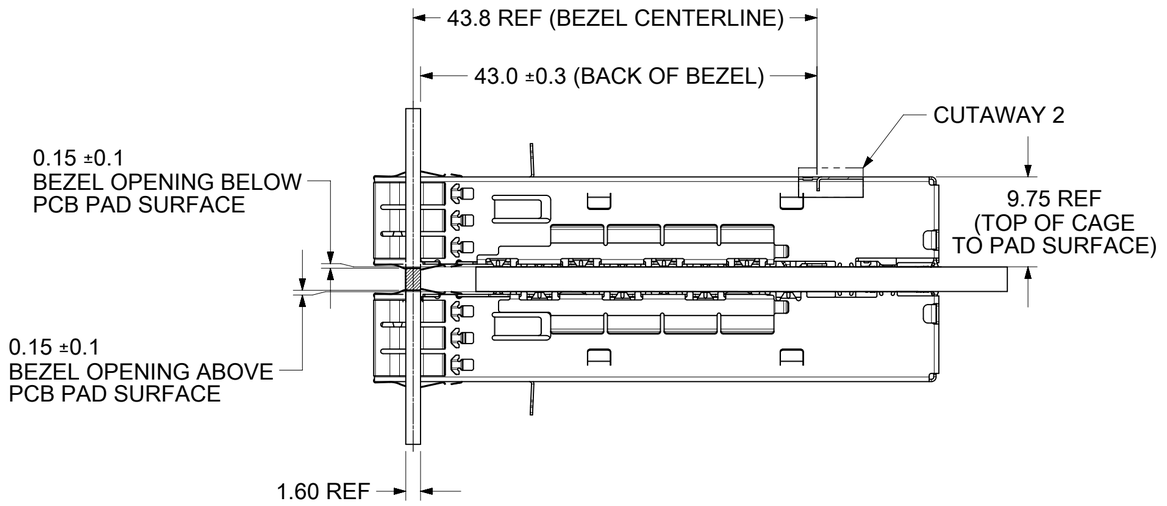

DUAL/QUAD LIGHT PIPE △2

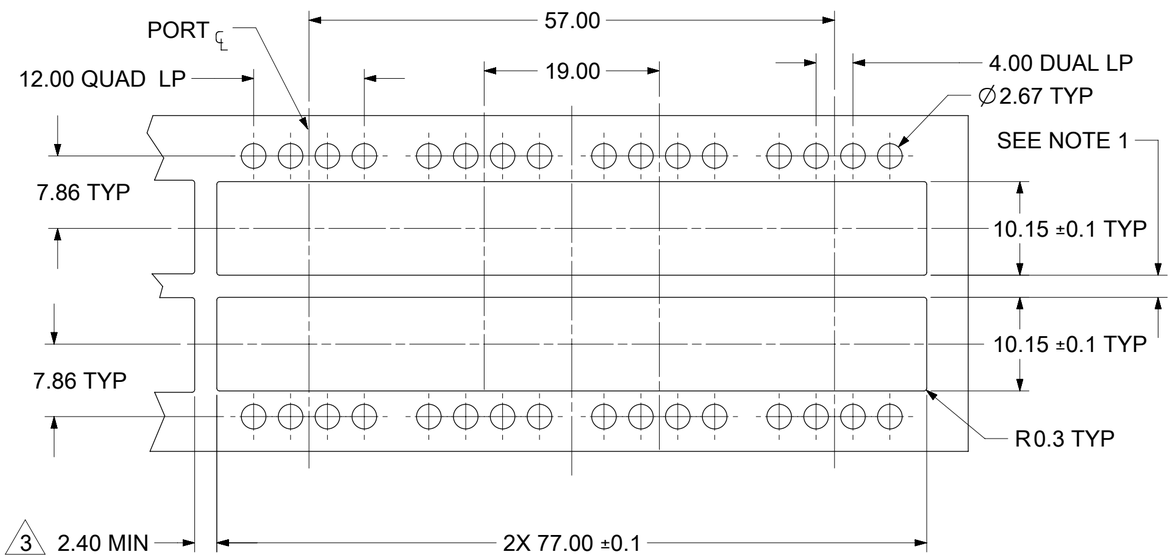

2 ROW QUAD LIGHT PIPE △2

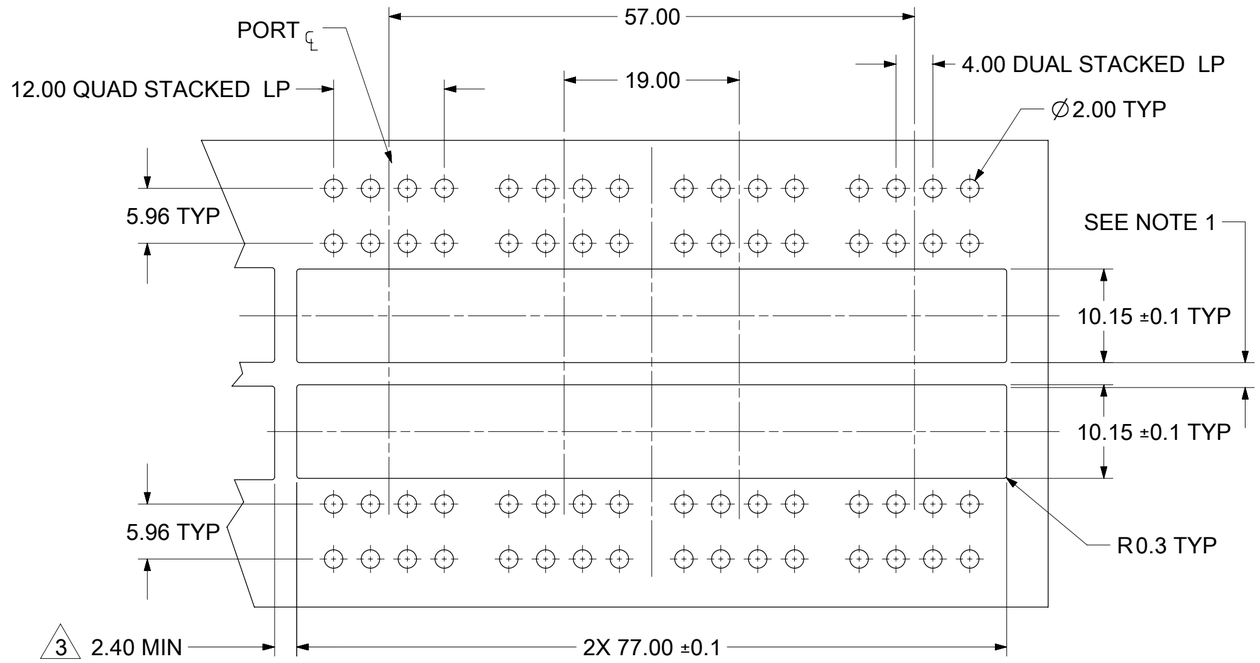

NOTE:
1. PCB THICKNESS VARIATION MUST BE CONSIDERED WHEN DETERMINING BEZEL OPENING LOCATION.
△2. NOTED DIMENSIONS ONLY APPLY TO CAGE ASSEMBLIES WITH LIGHT PIPES.
△3. THIS DIMENSION IS FOR REFERENCE ONLY. USER CAN MODIFY IT DEPENDS ON APPLICATION. (THIS DIMENSION VARIES BASED ON DISTANCE OF "HOLE OF ADJACENT CAGE" ON PCB LAYOUT.)

DOCUMENT STATUS	P1	RELEASE DATE	2023/02/24 09:13:41

THIS DRAWING CONTAINS INFORMATION THAT IS PROPRIETARY TO MOLEX ELECTRONIC TECHNOLOGIES, LLC AND SHOULD NOT BE USED WITHOUT WRITTEN PERMISSION

DIMENSION UNITS	SCALE
mm	2:1

GENERAL TOLERANCES (UNLESS SPECIFIED)

ANGULAR TOL	±	2.0 °
4 PLACES	±	
3 PLACES	±	
2 PLACES	±	0.13
1 PLACE	±	0.25
0 PLACES	±	

DRAFT WHERE APPLICABLE MUST REMAIN WITHIN DIMENSIONS

CURRENT REV DESC: REMOVED OBSOLETED PART NUMBER AS PER PCN#511691.

EC NO:	737858	
DRWN:	SANTHN	2023/02/08
CHK'D:	GGA	2023/02/24
APPR:	GGA	2023/02/24

INITIAL REVISION:

DRWN:	SJKG	2016/09/26
APPR:	RCHEN08	2016/11/29

THIRD ANGLE PROJECTION | DRAWING: C-SIZE | SERIES: 100017

molex

ZQSFP+ 1X4 GANGED CAGE ASSEMBLY
WING SPRING FINGER WITH H/S & LP OPTIONS

PRODUCT CUSTOMER DRAWING

DOCUMENT NUMBER	DOC TYPE	DOC PART	REVISION
1000177200	PSD	ASY	A3

MATERIAL NUMBER	CUSTOMER	SHEET NUMBER
SEE TABLE	GENERAL MARKET	8 OF 9

REV	DATE	DESCRIPTION
A	2016/11/25	INITIAL RELEASE
A1	2019/11/19	SHEET 2: D05: ADDED DIM 1.28 REF. SHEET 5: C07: ADDED DIM 19.52, 35.28 & 38.52 C09: ADDED DIM 54.28 & 57.52 C10: ADDED DIM 72.78 SHEET 7: G01: CORRECTED TYPO DIM FROM 9.78 REF TO 9.75 REF SHEET 8: G01: CORRECTED TYPO DIM FROM 9.78 REF TO 9.75 REF
A2	2019/11/25	SHEET 7: F05: CORRECTED BEZEL OPENING POSITION FROM ABOVE THE PCB PAD TO BELOW .
A3	2023/02/08	REMOVED OBSOLETED PART NUMBER 1000177240.

THIS DRAWING CONTAINS INFORMATION THAT IS PROPRIETARY TO MOLEX ELECTRONIC TECHNOLOGIES, LLC AND SHOULD NOT BE USED WITHOUT WRITTEN PERMISSION

DIMENSION UNITS	SCALE
mm	1:1

GENERAL TOLERANCES (UNLESS SPECIFIED)

ANGULAR TOL	±	2.0 °
4 PLACES	±	
3 PLACES	±	
2 PLACES	±	0.13
1 PLACE	±	0.25
0 PLACES	±	

DRAFT WHERE APPLICABLE MUST REMAIN WITHIN DIMENSIONS

CURRENT REV DESC: REMOVED OBSOLETED PART NUMBER AS PER PCN#511691.

EC NO: 737858

DRWN:	SANTHN	2023/02/08
CHK'D:	GGA	2023/02/24
APPR:	GGA	2023/02/24

INITIAL REVISION:

DRWN:	SJKG	2016/09/26
APPR:	RCHEN08	2016/11/29

molex

ZQSFP+ 1X4 GANGED CAGE ASSEMBLY
WING SPRING FINGER WITH H/S & LP OPTIONS

PRODUCT CUSTOMER DRAWING

DOCUMENT NUMBER	DOC TYPE	DOC PART	REVISION
1000177200	PSD	ASY	A3

THIRD ANGLE PROJECTION	DRAWING	SERIES	MATERIAL NUMBER	CUSTOMER	SHEET NUMBER
	C-SIZE	100017	SEE TABLE	GENERAL MARKET	9 OF 9

DOCUMENT STATUS	P1	RELEASE DATE	2023/02/24 09:13:41