NOTE :

1. MATERIAL :
   HOUSING : PPA, COLOR : BLACK
2. FINISH: SPI B3
3. PARTS ARE TO BE CLEAN AND FREE OF INCOMPLETE FILLS AND VOIDS, PARTS ARE TO BE FREE OF EXCESS FLASH
4. PARTING LINE MISMATCH NOT TO EXCEED 0.05MM, ALL EJECTOR PINS TO BE FLUSH TO 0.125MM RECESSED
5. TRIM GATE VESTAGE FUSH TO 0.25MM RECESSED
6. PART NUMBER "003-1191-101" IS TO BE ENGRAVED IN MOLDING USING 2.2MM TALL CHARACTERS RAISED 0.15-0.25MM, REVISION NUMBER IS TO BE ENGRAVED ON A CHANGEABLE PIN NEXT TO THE PART NUMBER
7. FOR PRODUCTION TOOLING: DATE CODE (YEAR/MONTH) TO BE INSTALLED, APPROXIMATE PLACEMENT SHOWN
8. FOR PRODUCTION TOOLING: RECYCLING LOGO WITH MATERIAL TYPE TO BE INSTALLED, APPROXIMATE PLACEMENT SHOWN
9. GENERAL RADIUS: 0.25MM TYP
10. COMPLIANT TO RoHS DIRECTIVE 2002/95/EC AND ELV DIRECTIVE 2000/53/EC.

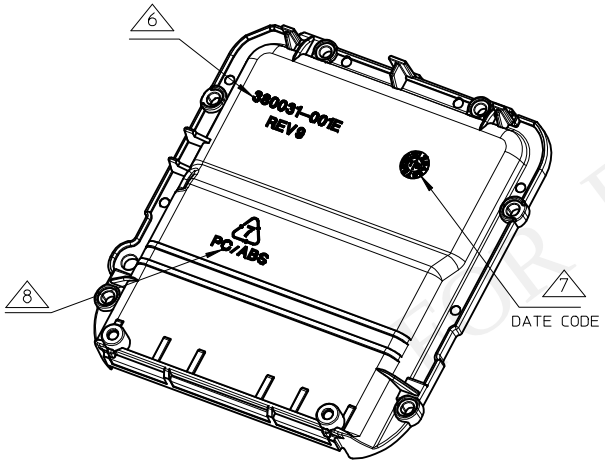

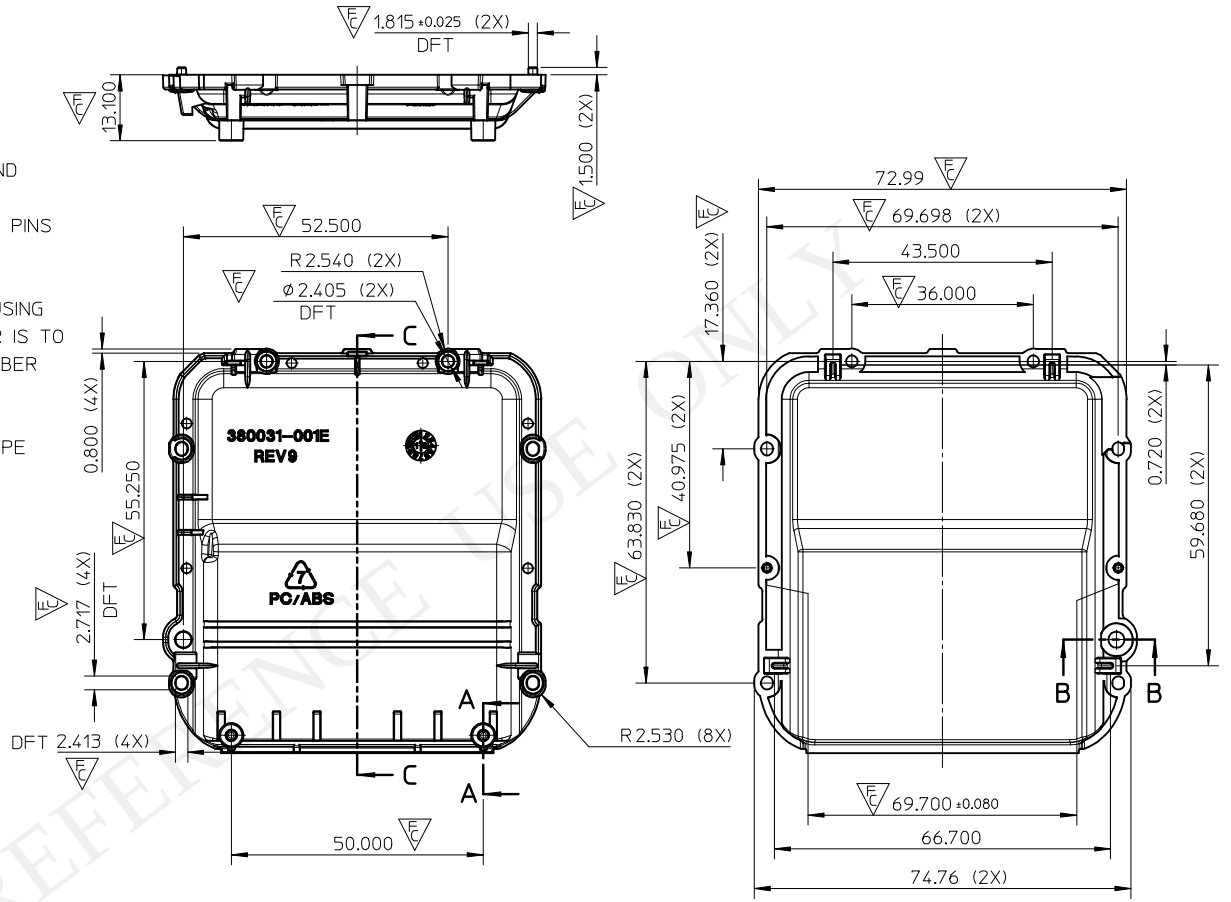

FOR REFERENCE USE ONLY

REVISE EC NO: ABU2014-0033	QUALITY SYMBOLS	GENERAL TOLERANCES (UNLESS SPECIFIED)		DIMENSION STYLE	SCALE	DESIGN UNITS	THIRD ANGLE PROJECTION
		mm	INCH	MM ONLY	1:1	METRIC	
DRWN:XJSONG 2013/10/08	FA=0	4 PLACES ± ---	± ---	DRAWN BY XJSONG DATE 2013/04/12	TITLE: CONNECTOR FOR SECURTIY COVER SMART CARD		
CH'KD:	FC=16	3 PLACES ± 0.14	± ---	CHECKED BY XJSONG DATE 2013/04/12			
APPR:XJSONG 2013/11/18		2 PLACES ± 0.24	± ---	APPROVED BY XJSONG DATE 2013/04/12	molex		
DESCRIPTION	FB=0	1 PLACE ± 0.5	± ---	MATERIAL NO. 105294-1000	DOCUMENT NO. SD-105294-100		SHEET NO. 1 OF 2
REV		0 PLACE ± ---	± ---				
5		ANGULAR ±0.5°		SIZE A3	THIS DRAWING CONTAINS INFORMATION THAT IS PROPRIETARY TO MOLEX INCORPORATED AND SHOULD NOT BE USED WITHOUT WRITTEN PERMISSION		
		DRAFT WHERE APPLICABLE MUST REMAIN WITHIN DIMENSIONS					

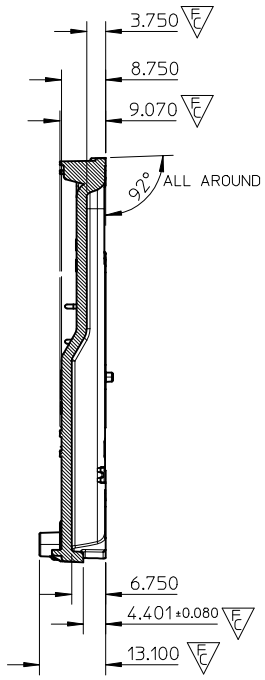

SECTION C-C

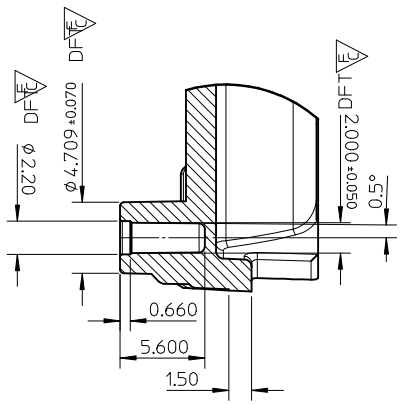

PARTIAL1

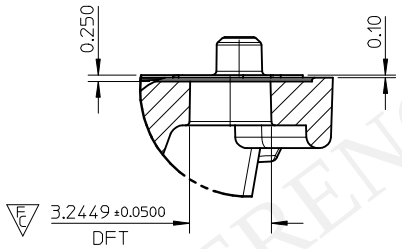

SECTION B-B

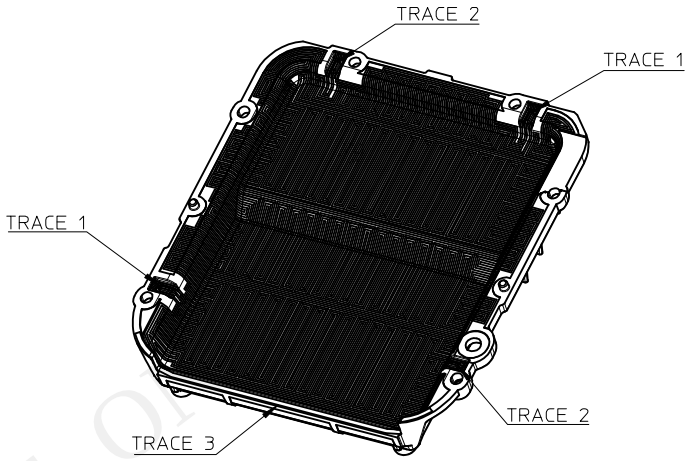

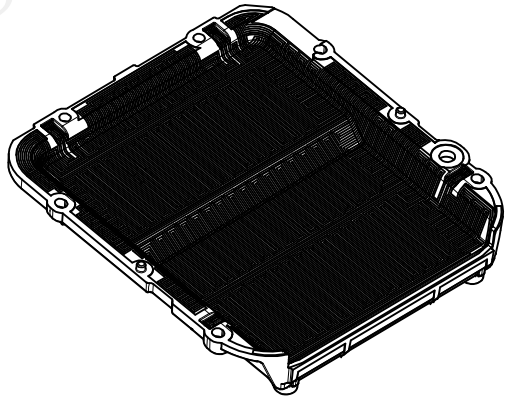

TRACE LAYOUT

NOTE:
1. TRACE WIDTH : 0.40MM
2. GAP BETWEEN TRACES: 0.40MM
3. TRACE LAYOUT FOLLOW 3D MODEL
4. PLATING SPEC: Cu 10~20um / Ni 3~8um / Au 0.05~0.1um
5. RESISTANCE FROM END TO END : 9~20 OHMS
6. COMPLIANT TO RoHS DIRECTIVE 2002/95/EC AND ELV DIRECTIVE 2000/53/EC.

FOR REFERENCE USE ONLY

SEE SHEET1 EC NO: ABU2014-0033 DRWN:XJSONG 2013/10/08 CH'KD: APPR:XJSONG 2013/11/18 5	REV	DESCRIPTION	QUALITY SYMBOLS FA=0 FC=8 FP=0	GENERAL TOLERANCES (UNLESS SPECIFIED) mm / INCH 4 PLACES ±--- ±--- 3 PLACES ±0.14 ±--- 2 PLACES ±0.24 ±--- 1 PLACE ±0.5 ±--- 0 PLACE ±--- ±--- ANGULAR ±0.5° DRAFT WHERE APPLICABLE MUST REMAIN WITHIN DIMENSIONS	DIMENSION STYLE MM ONLY DRAWN BY XJSONG DATE 2013/04/12 CHECKED BY XJSONG DATE 2013/04/12 APPROVED BY XJSONG DATE 2013/04/12 MATERIAL NO. SEE SHEET1	SCALE 1:1 DESIGN UNITS METRIC THIRD ANGLE PROJECTION TITLE CONNECTOR FOR SECURTIY COVER SMART CARD molex DOCUMENT NO. SD-105294-100	SHEET NO. 2 OF 2
					SIZE A3	THIS DRAWING CONTAINS INFORMATION THAT IS PROPRIETARY TO MOLEX INCORPORATED AND SHOULD NOT BE USED WITHOUT WRITTEN PERMISSION	

tb_frame_A3_P_AM_T
Rev. G 2012/01/11