S02 SERIES MATRIX

S	0	2	2	0	9	T	A	1	1	1	*	*

SERIES:
S02- INTERNAL THREAD FORM B

POLES:
2-2 POLE

THREAD:
07-PG7
09-PG9
11-PG11
M2-M12X1.5
M6-M16X1.5

MATERIAL AND HOUSING COLOUR:
G-PA6 GRAY
N-PA6 BLACK
W-PA6 BLACK V0
T-PA12 TRANSPARENT
B-PA6 WHITE

CIRCUIT:
SEE DETAILS IN CATALOGUE

VOLTAGE:
SEE DETAILS IN CATALOGUE

SCREW AND GASKET:
1- NBR PROFILE GASKET & SCREW
2- NBR FLAT GASKET & SCREW
3-WHITE SILICON PROFILE GASKET & SCREW
4-WHITE SILICON FLAT GASKET & SCREW
A-NBR PROFILE GASKET & SCREW +2MM
B-NBR FLAT GASKET & SCREW +2MM

NON STANDARD COMPONENTS:
04-EARTH POSITION AT H6
14-PACKED IN NEUTRAL BAG
A-SCREW 2MM LONGER THAN STANDARD
5A-SINGLE BAGGED WITH 500 IN A BOX
5J-100 IN A BOX
5N-PACKED IN BOXES OF 200
SA-UL LISTED

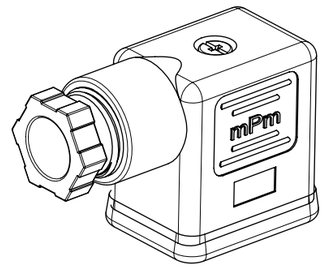

SCALE 1:1

SEE TABLE 1 FOR GASKET AND SCREW TYPES

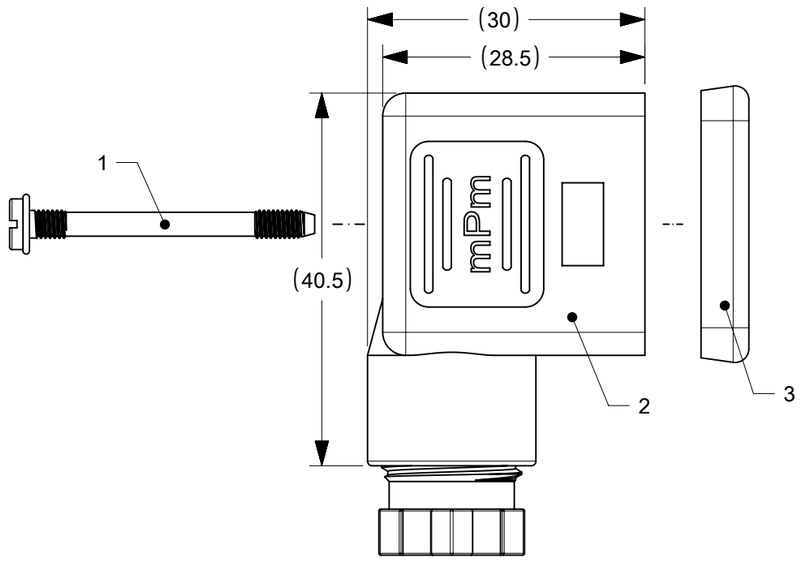

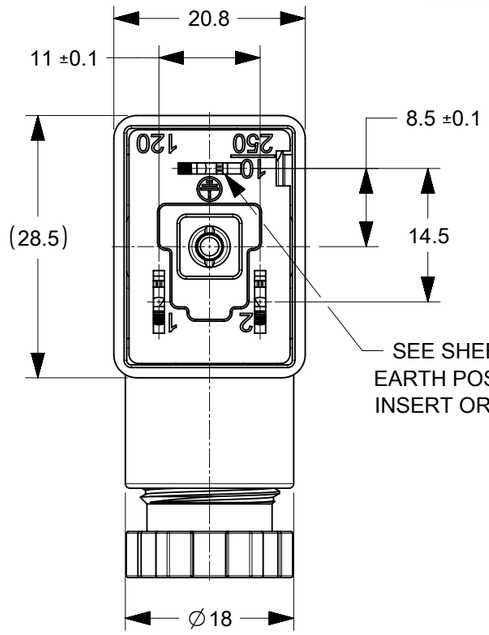

SEE SHEET 2 FOR EARTH POSITION AND INSERT ORIENTATION

GASKET HIDED FOR CLARITY

ITEM	DESCRRIPTION/OPIS
1	SCREW
2	COVER+INSERT ASSEMBLY
3	GASKET

TABLE 1

PROFILED GASKET	FLAT GASKET	SCREW M3x31
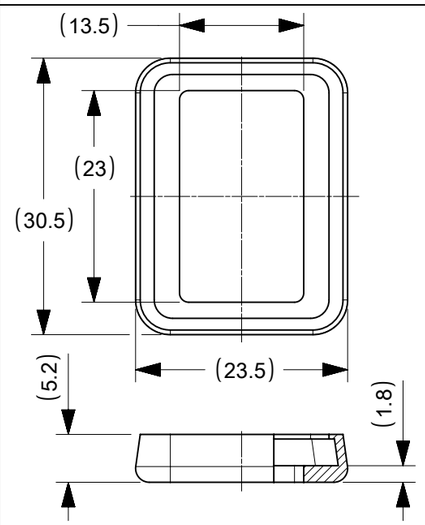	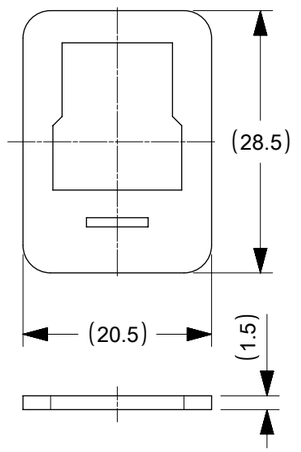	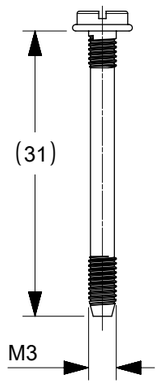

DOCUMENT STATUS	P1	RELEASE DATE	2022/06/22 14:10:33

TECHNICAL SPECIFICATION:

OPERATING CURRENT: 16A
CONTACT RESISTANCE: <15 mOhms MAX.

OPERATING TEMPERATURE:
NBR GASKET: -40° TO +90°C
SILICONE GASKET: -40° TO 125°C

THIS DRAWING CONTAINS INFORMATION THAT IS PROPRIETARY TO MOLEX ELECTRONIC TECHNOLOGIES, LLC AND SHOULD NOT BE USED WITHOUT WRITTEN PERMISSION

DIMENSION UNITS	SCALE
mm	3:2

GENERAL TOLERANCES (UNLESS SPECIFIED)

ANGULAR TOL	±	1.0 °
4 PLACES	±	
3 PLACES	±	
2 PLACES	±	0.05
1 PLACE	±	0.3
0 PLACES	±	0.5

DRAFT WHERE APPLICABLE MUST REMAIN WITHIN DIMENSIONS

CURRENT REV DESC: REMOVED OBSOLETED PART NUMBER AS PER PCN#509989.

EC NO: 708673
DRWN: SANTHN 2022/05/26
CHK'D: GGA 2022/06/22
APPR: GGA 2022/06/22

INITIAL REVISION:
DRWN: MDHARMANTI 2018/11/29
APPR: RSILLER 2019/02/14

THIRD ANGLE PROJECTION | DRAWING: A3-SIZE | SERIES: 121064

molex

S022 PG9 T WPCB A1 12V RED LED H12

PRODUCT CUSTOMER DRAWING

DOCUMENT NUMBER	DOC TYPE	DOC PART	REVISION
1210641752	PSD	000	A2

MATERIAL NUMBER	CUSTOMER	SHEET NUMBER
SEE PART LIST	GENERAL MARKET	1 OF 2

PART LIST AND BOM

ENGINEERING NO.	MOLEX P/N	EARTH
S02207TC421	1210640007	H12
S02209ND021	1210640035	H12
S02209ND041	1210640037	H12
S02209ND051	1210640038	H12
S02209NE051	1210640039	H12
S02209TA121	1210640058	H12
S02209TA122	1210640060	H12
S02209TA141	1210640064	H12
S02209TA151	1210640068	H12
S02209TA152	1210640069	H12
S02209TA1H1	1210640077	H12
S02209TC321	1210640087	H12
S02209TC3B1	1210640093	H12
S02209TC3H1	1210640094	H12
S02209TC421	1210640097	H12
S02209TC422	1210640099	H12
S02209TC431	1210640102	H12
S02209TC441	1210640104	H12
S02209TC442	1210640106	H12
S02209TC451	1210640108	H12
S02209TC452	1210640110	H12
S02209TC4B1	1210640113	H12
S02209TC4D2	1210640117	H12
S02209TC4E2	1210640119	H12
S02209TC4H1	1210640120	H12
S02209TC4L1	1210640122	H12
S02209TC4M1	1210640124	H12
S02209WE051	1210640129	H12
S02209TC4G1	1210641343	H12

ENGINEERING NO.	MOLEX P/N	EARTH
S022M6NE052	1210641364	H12
S022M6TC4H1	1210641375	H12
S02209TC421SA	1210641395	H12
S022M6TC421	1210641406	H12
S02209TC332	1210641409	H12
S02209WE051SA	1210641585	H12
S02207TC321	1210641593	H12
S022M0TC4B1	1210641649	H12
S02209TC421B	1210641655*	H12
S02209TC322	1210641742	H12
S02209TA111	1210641752	H12
S02209TA1H2	1210641818	H12
S02209TA12204	1210650061	H6
S02209TC3228602	1210650077*	H12
S02209TC4228602	1210650084*	H12
S02209TC4428602	1210650088*	H12
S02209NE0522465	1210650554*	H12
S02207TC422SA	1210641353	H12
S022M2TA121	1210641584	H12
S02207TC441SA	1210641631	H12

INSERT ORIENTATION

HOUSING 2 POLES +1 EARTH

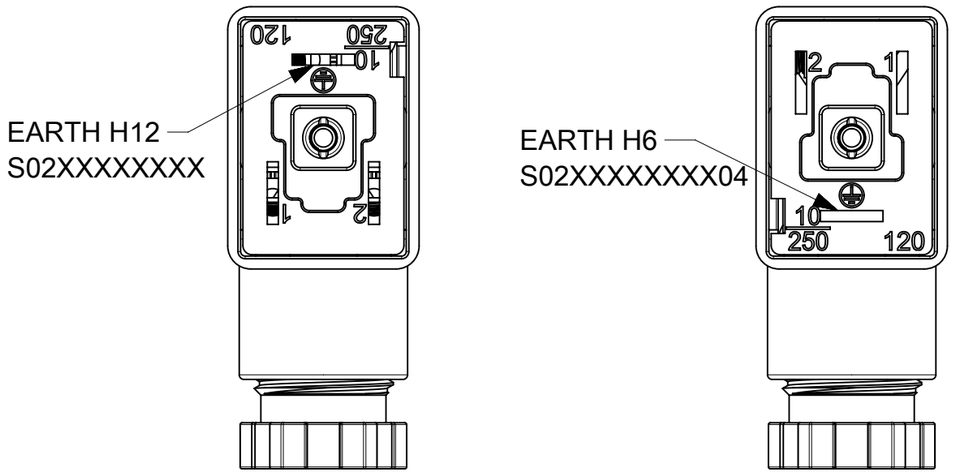

NOTE:
* P/Ns 1210650554, 1210650088,1210650084,
1210650077 & 1210641655 are special customer P/N's.

THIS DRAWING CONTAINS INFORMATION THAT IS PROPRIETARY TO MOLEX ELECTRONIC TECHNOLOGIES, LLC AND SHOULD NOT BE USED WITHOUT WRITTEN PERMISSION

DIMENSION UNITS	SCALE
mm	3:2

GENERAL TOLERANCES (UNLESS SPECIFIED)

ANGULAR TOL	±	1.0 °
4 PLACES	±	
3 PLACES	±	
2 PLACES	±	0.05
1 PLACE	±	0.3
0 PLACES	±	0.5

DRAFT WHERE APPLICABLE MUST REMAIN WITHIN DIMENSIONS

CURRENT REV DESC: REMOVED OBSOLETED PART NUMBER AS PER PCN#509989.

EC NO: 708673
DRWN: SANTHN 2022/05/26
CHK'D: GGA 2022/06/22
APPR: GGA 2022/06/22

INITIAL REVISION:
DRWN: MDHARMANTI 2018/11/29
APPR: RSILLER 2019/02/14

THIRD ANGLE PROJECTION | DRAWING: A3-SIZE | SERIES: 121064

molex

S022 PG9 T WPCB A1 12V RED LED H12

PRODUCT CUSTOMER DRAWING

DOCUMENT NUMBER	DOC TYPE	DOC PART	REVISION
1210641752	PSD	000	A2

MATERIAL NUMBER	CUSTOMER	SHEET NUMBER
SEE PART LIST	GENERAL MARKET	2 OF 2

DOCUMENT STATUS	P1	RELEASE DATE	2022/06/22 14:10:33

EM-121064-094

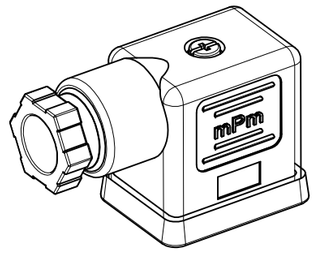

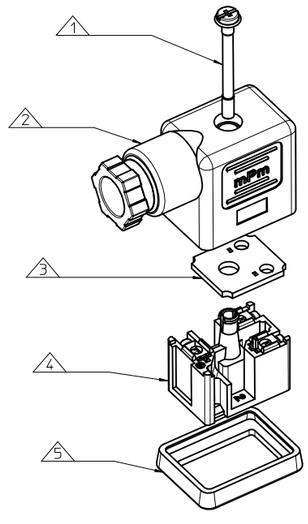

ITEM	DESCRIPTION
1	SCREW
2	COVER ASSEMBLY
3	PCB
4	INSERT ASSEMBLY
5	GASKET

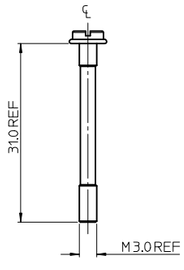

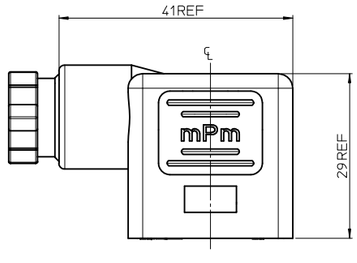

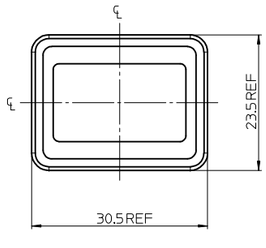

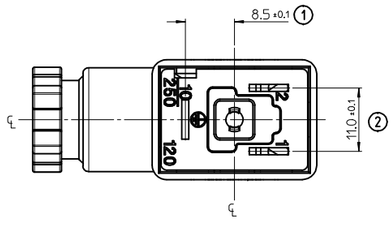

S02209TA111**

SERIES
S02= INTERNAL THREAD FORM B
POLES
2= 2 POLE
THREAD
07= PG7, 09= PG9 11= PG11, M2= M12x1.5, M6= M16x1.5,
M0= M20x1.5, 39= PG9 WITH STRAIN RELIEF
MATERIAL AND HOUSING COLOUR
G= PA6 GRAY, N= PA6 BLACK, W= PA6 BLACK V0,
T= PA12 TRANSPARENT, B= PA6 WHITE
CIRCUIT
SEE DETAILS IN CATALOGUE
VOLTAGE
SEE DETAILS IN CATALOGUE
SCREW AND GASKET
1= NBR PROFILE GASKET & SCREW
2= NBR FLAT GASKET & SCREW
3= WHITE SILICON PROFILE GASKET & SCREW
4= WHITE SILICON FLAT GASKET & SCREW
A= NBR PROFILE GASKET AND SCREW +2mm
B= NBR FLAT GASKET AND SCREW +2mm

NON STANDARD COMPONENTS
04= EARTH POSITION AT H6
14= PACKED IN NEUTRAL BAG
A= SCREW 2mm LONGER THAN STANDARD
5A= SINGLE BAGGED WITH 500 IN A BOX
5J= 100 IN A BOX
5N= PACKED IN BOXES OF 200
SA= UL LISTED

NOTES
1. PLEASE SEE SHEET 2 FOR CURRENTLY CONFIGURED PART NUMBERS.
   FOR SPECIFIC PART NUMBERS PLEASE CONTACT SALES OR CONSULT
   THE INTELLIGENT PART NUMBERS IN THE TABLE ATTACHED.
2. EARTH POSITION SHOWN, H6.
3. PRODUCT SPEC: SEE PS-121201-001, WITH EXCEPTION.
4. FOR PACKAGING SEE PACKAGING SPEC PK-121065-S02.

LAST INSPECTION NUMBER 2

UPDATED NOTE 3
EC NO: IPG2015-1871 2015/04/28
DRWN:BCAFFREY
CHKD:
APPR:STGRIFFIN 2015/05/13
DESCRIPTION
REV
E

QUALITY SYMBOLS
▼=0
▽=0

GENERAL TOLERANCES (UNLESS SPECIFIED)

	mm	INCH
4 PLACES	± ---	± ---
3 PLACES	± ---	± ---
2 PLACES	± 0.1	± ---
1 PLACE	± 0.2	± ---
ANGULAR	± ---°	

DRAFT WHERE APPLICABLE MUST REMAIN WITHIN DIMENSIONS

DIMENSION STYLE: MM ONLY
SCALE: 1.5:1
DESIGN UNITS: METRIC
THIRD ANGLE PROJECTION

		DATE
DRAWN BY	JOCONNOR	2011/05/18
CHECKED BY	DMAHER	2011/05/19
APPROVED BY	EFOLAN	2011/06/07

MATERIAL NO.: SEE SHEET 2 & 3

TITLE: S02 SERIES INTERNAL THREAD

MOLEX INCORPORATED

DOCUMENT NO.: SD-121064-005
SHEET NO.: 1 OF 3

SIZE: A2

THIS DRAWING CONTAINS INFORMATION THAT IS PROPRIETARY TO MOLEX INCORPORATED AND SHOULD NOT BE USED WITHOUT WRITTEN PERMISSION

PART No.	mPm PART No.	DESCRIPTION	CIRCUIT	VOLTAGE	INDICATOR
1210641752	S02209TA111	TYPE B 2P PG9 TRANSPARENT NBR PROFILE GASKET	A1	12V	RED LED/LAMP
1210641404	S02209TA11B	TYPE B 2P PG9 TRANSPARENT NBR FLAT GASKET, & SCREW +2mm	A1	12V	RED LED/LAMP
1210640058	S02209TA121	TYPE B 2P PG9 TRANSPARENT NBR PROFILE GASKET	A1	24V	RED LED/LAMP
1210641584	S022M2TA121	TYPE B 2P M12x1.5 TRANSPARENT NBR PROFILE GASKET	A1	24V	RED LED/LAMP
1210640004	S02207TA121	TYPE B 2P PG7 TRANSPARENT NBR PROFILE GASKET	A1	24V	RED LED/LAMP
1210640087	S02209TC321	TYPE B 2P PG9 TRANSPARENT NBR PROFILE GASKET	C3	24V	RED LED/LAMP
1210640135	S02239TC321	TYPE B 2P PG9 W/STRAIN RELIEF TRANSPARENT NBR PROFILE GASKET	C3	24V	RED LED/LAMP
1210641593	S02207TC321	TYPE B 2P PG7 TRANSPARENT NBR PROFILE GASKET	C3	24V	RED LED/LAMP
1210640095	S02209TC411	TYPE B 2P PG9 TRANSPARENT NBR PROFILE GASKET	C4	12V	RED LED/LAMP
1210640007	S02207TC421	TYPE B 2P PG7 TRANSPARENT NBR PROFILE GASKET	C4	24V	RED LED/LAMP
1210640097	S02209TC421	TYPE B 2P PG9 TRANSPARENT NBR PROFILE GASKET	C4	24V	RED LED/LAMP
1210650081	S02209TC4215J	TYPE B 2P PG9 TRANSPARENT NBR PROFILE GASKET IN BOXES OF 100	C4	24V	RED LED/LAMP
1210641406	S022M6TC421	TYPE B 2P M16x1.5 TRANSPARENT NBR PROFILE GASKET	C4	24V	RED LED/LAMP
1210641742	S02209TC322	TYPE B 2P PG9 TRANSPARENT NBR FLAT GASKET	C3	24V	RED LED/LAMP
1210640060	S02209TA122	TYPE B 2P PG9 TRANSPARENT NBR FLAT GASKET	A1	24V	RED LED/LAMP
1210650061	S02209TA12204	TYPE B 2P PG9 TRANSPARENT NBR FLAT GASKET, EARTH AT H6 POSITION	A1	24V	RED LED/LAMP
1210640061	S02209TA12B	TYPE B 2P PG9 TRANSPARENT NBR FLAT GASKET, & SCREW +2mm	A1	24V	RED LED/LAMP
1210640062	S02209TA131	TYPE B 2P PG9 TRANSPARENT NBR PROFILE GASKET	A1	48V	RED LED/LAMP
1210641580	S022M0TC421	TYPE B 2P M20x1.5 TRANSPARENT NBR PROFILE GASKET	C4	24V	RED LED/LAMP
1210640101	S02209TC42B	TYPE B 2P PG9 TRANSPARENT NBR FLAT GASKET, & SCREW +2mm	C4	24V	RED LED/LAMP
1210650080	S02209TC4215A	TYPE B 2P PG9 TRANSPARENT NBR PROFILE GASKET SINGLE BAGGED 500 IN A BOX	C4	24V	RED LED/LAMP
1210641668	S02209TC42114	TYPE B 2P PG9 TRANSPARENT NBR PROFILE GASKET IN NEUTRAL BAG	C4	24V	RED LED/LAMP
1210640064	S02209TA141	TYPE B 2P PG9 TRANSPARENT NBR PROFILE GASKET	A1	115V	RED LED/LAMP
1210640005	S02207TA141	TYPE B 2P PG7 TRANSPARENT NBR PROFILE GASKET	A1	115V	RED LED/LAMP
1210640066	S02209TA142	TYPE B 2P PG9 TRANSPARENT NBR FLAT GASKET	A1	115V	RED LED/LAMP
1210640067	S02209TA14B	TYPE B 2P PG9 TRANSPARENT NBR FLAT GASKET, & SCREW +2mm	A1	115V	RED LED/LAMP
1210640068	S02209TA151	TYPE B 2P PG9 TRANSPARENT NBR PROFILE GASKET	A1	230V	RED LED/LAMP
1210641409	S02209TC332	TYPE B 2P PG9 TRANSPARENT NBR FLAT GASKET	C3	48V	RED LED/LAMP
1210640035	S02209ND021	TYPE B 2P PG9 BLACK NBR PROFILE GASKET	D0	24V	DIODE
1210640069	S02209TA152	TYPE B 2P PG9 TRANSPARENT NBR FLAT GASKET	A1	230V	RED LED/LAMP
1210640070	S02209TA15B	TYPE B 2P PG9 TRANSPARENT NBR FLAT GASKET, & SCREW +2mm	A1	230V	RED LED/LAMP
1210640102	S02209TC431	TYPE B 2P PG9 TRANSPARENT NBR PROFILE GASKET	C4	48V	RED LED/LAMP
1210641675	S02209TC4315A	TYPE B 2P PG9 TRANSPARENT NBR PROFILE GASKET SINGLE BAGGED 500 IN A BOX	C4	48V	RED LED/LAMP
1210640028	S02209BC432	TYPE B 2P PG9 WHITE NBR FLAT GASKET	C4	48V	RED LED/LAMP
1210640037	S02209ND041	TYPE B 2P PG9 BLACK NBR PROFILE GASKET	D0	115V	DIODE
1210640071	S02209TA1B1	TYPE B 2P PG9 TRANSPARENT NBR PROFILE GASKET	A1	24V	GREEN LED
1210640038	S02209ND051	TYPE B 2P PG9 BLACK NBR PROFILE GASKET	D0	230V	DIODE
1210640104	S02209TC441	TYPE B 2P PG9 TRANSPARENT NBR PROFILE GASKET	C4	115V	RED LED/LAMP
1210640072	S02209TA1B2	TYPE B 2P PG9 TRANSPARENT NBR FLAT GASKET	A1	24V	GREEN LED
1210640106	S02209TC442	TYPE B 2P PG9 TRANSPARENT NBR FLAT GASKET	C4	115V	RED LED/LAMP
1210641674	S02209TC4415A	TYPE B 2P PG9 TRANSPARENT NBR PROFILE GASKET SINGLE BAGGED 500 IN A BOX	C4	115V	RED LED/LAMP
1210641613	S022M2TS021	TYPE B 2P M12x1.5 TRANSPARENT NBR PROFILE GASKET	S0	24V	RED LED/LAMP
1210640009	S02207TC441	TYPE B 2P PG7 TRANSPARENT NBR PROFILE GASKET	C4	115V	RED LED/LAMP
1210640108	S02209TC451	TYPE B 2P PG9 TRANSPARENT NBR PROFILE GASKET	C4	230V	RED LED/LAMP
1210640076	S02209TA1E2	TYPE B 2P PG9 TRANSPARENT NBR FLAT GASKET	A1	230V	GREEN LED
1210640049	S02209TA041	TYPE B 2P PG9 TRANSPARENT NBR PROFILE GASKET	A0	115V	RED LED/LAMP
1210640044	S02209TA011	TYPE B 2P PG9 TRANSPARENT NBR PROFILE GASKET	A0	12V	RED LED/LAMP
1210640052	S02209TA051	TYPE B 2P PG9 TRANSPARENT NBR PROFILE GASKET	A0	230V	RED LED/LAMP
1210641376	S022M6TC022	TYPE B 2P M16x1.5 TRANSPARENT NBR FLAT GASKET	C0	24V	RED LED/LAMP
1210640080	S02209TC021	TYPE B 2P PG9 TRANSPARENT NBR PROFILE GASKET	C0	24V	RED LED/LAMP
1210640045	S02209TA021	TYPE B 2P PG9 TRANSPARENT NBR PROFILE GASKET	A0	24V	RED LED/LAMP
1210640092	S02209TC351	TYPE B 2P PG9 TRANSPARENT NBR PROFILE GASKET	C3	230V	RED LED/LAMP

SEE SHEET ONE
ECC NO: IPG2015-1871 2015/04/28
DRWN:BCAFFREY 2015/05/13
CHKD:
APPR:STGRIFFIN
REV: E
DESCRIPTION

QUALITY SYMBOLS
▼=0
▽=0

GENERAL TOLERANCES (UNLESS SPECIFIED)

	mm	INCH
4 PLACES	± ---	± ---
3 PLACES	± ---	± ---
2 PLACES	± 0.1	± ---
1 PLACE	± 0.2	± ---
ANGULAR ±---°		

DRAFT WHERE APPLICABLE MUST REMAIN WITHIN DIMENSIONS

DIMENSION STYLE: MM ONLY
SCALE: 1.5:1
DESIGN UNITS: METRIC
THIRD ANGLE PROJECTION

		DATE
DRAWN BY	JOCONNOR	2011/05/18
CHECKED BY	DMAHER	2011/05/19
APPROVED BY	EFOLAN	2011/06/07

TITLE: S02 SERIES INTERNAL THREAD

MOLEX INCORPORATED

MATERIAL NO.: SEE CHART
DOCUMENT NO.: SD-121064-005
SHEET NO.: 2 OF 3

SIZE: A2

THIS DRAWING CONTAINS INFORMATION THAT IS PROPRIETARY TO MOLEX INCORPORATED AND SHOULD NOT BE USED WITHOUT WRITTEN PERMISSION

PART No.	mPm PART No.	DESCRIPTION	CIRCUIT	VOLTAGE	INDICATOR
1210640093	S02209TC3B1	TYPE B 2P PG9 TRANSPARENT NBR PROFILE GASKET	C3	24V	GREEN LED
1210640039	S02209NE051	TYPE B 2P PG9 BLACK NBR PROFILE GASKET	E0	230V	DIODE
1210641555	S02209WE051A	TYPE B 2P PG9 BLACK V0 NBR PROFILE GASKET & SCREW +2mm	E0	230V	DIODE
1210641364	S022M6NE052	TYPE B 2P M16x1,5 BLACK NBR FLAT GASKET	E0	230V	DIODE
1210640129	S02209WE051	TYPE B 2P PG9 BLACK V0 NBR PROFILE GASKET	E0	230V	DIODE
1210640040	S02209NE052	TYPE B 2P PG9 BLACK NBR FLAT GASKET	E0	230V	DIODE
1210641679	S02209NE05114	TYPE B 2P PG9 BLACK NBR PROFILE GASKET IN NEUTRAL BAG	E0	230V	DIODE
1210640110	S02209TC452	TYPE B 2P PG9 TRANSPARENT NBR FLAT GASKET	C4	230V	RED LED/LAMP
1210650089	S02209TC4515A	TYPE B 2P PG9 TRANSPARENT NBR PROFILE GASKET SINGLE BAGGED 500 IN A BOX	C4	230V	RED LED/LAMP
1210641666	S02209TC45114	TYPE B 2P PG9 TRANSPARENT NBR PROFILE GASKET IN NEUTRAL BAG	C4	230V	RED LED/LAMP
1210641649	S022M0TC4B1	TYPE B 2P M20x1,5 TRANSPARENT NBR PROFILE GASKET	C4	24V	GREEN LED
1210640114	S02209TC4B2	TYPE B 2P PG9 TRANSPARENT NBR FLAT GASKET	C4	24V	GREEN LED
1210640113	S02209TC4B1	TYPE B 2P PG9 TRANSPARENT NBR PROFILE GASKET	C4	24V	GREEN LED
1210640117	S02209TC4D2	TYPE B 2P PG9 TRANSPARENT NBR FLAT GASKET	C4	115V	GREEN LED
1210641750	S02209TC4D1	TYPE B 2P PG9 TRANSPARENT NBR PROFILE GASKET	C4	115V	GREEN LED
1210640119	S02209TC4E2	TYPE B 2P PG9 TRANSPARENT NBR FLAT GASKET	C4	230V	GREEN LED
1210641343	S02209TC4G1	TYPE B 2P PG9 TRANSPARENT NBR PROFILE GASKET	C4	12V	AMBER LED
1210640120	S02209TC4H1	TYPE B 2P PG9 TRANSPARENT NBR PROFILE GASKET	C4	24V	AMBER LED
1210641375	S022M6TC4H1	TYPE B 2P M16x1,5 TRANSPARENT NBR PROFILE GASKET	C4	24V	AMBER LED
1210641601	S02209TC4K2	TYPE B 2P PG9 TRANSPARENT NBR FLAT GASKET	C4	48V	AMBER LED
1210641344	S02209TC4K1	TYPE B 2P PG9 TRANSPARENT NBR PROFILE GASKET	C4	48V	AMBER LED
1210640123	S02209TC4L2	TYPE B 2P PG9 TRANSPARENT NBR FLAT GASKET	C4	115V	AMBER LED
1210640122	S02209TC4L1	TYPE B 2P PG9 TRANSPARENT NBR PROFILE GASKET	C4	115V	AMBER LED
1210640094	S02209TC3H1	TYPE B 2P PG9 TRANSPARENT NBR PROFILE GASKET	C3	24V	AMBER LED
1210641686	S02209TC3L1	TYPE B 2P PG9 TRANSPARENT NBR PROFILE GASKET	C3	115V	AMBER LED
1210640077	S02209TA1H1	TYPE B 2P PG9 TRANSPARENT NBR PROFILE GASKET	A1	24V	AMBER LED
1210640124	S02209TC4M1	TYPE B 2P PG9 TRANSPARENT NBR PROFILE GASKET	C4	230V	AMBER LED
1210640078	S02209TA1L1	TYPE B 2P PG9 TRANSPARENT NBR PROFILE GASKET	A1	115V	AMBER LED
1210641764	S022M6TC321	TYPE B 2P M16x1,5 TRANSPARENT NBR PROFILE GASKET	C3	24V	RED LED/LAMP
1210640099	S02209TC422	TYPE B 2P PG9 TRANSPARENT NBR FLAT GASKET	C4	24V	RED LED/LAMP
1210641794	S022M6TC421SA	TYPE B 2P M16x1,5 TRANSPARENT NBR PROFILE GASKET, UL LISTED	C4	24V	RED LED

SEE SHEET ONE
EC NO: IPG2015-1871 2015/04/28
DRWN:BCAFFREY 2015/05/13
CHK'D:
APPR:STGRIFFIN
DESCRIPTION
REV: E

QUALITY SYMBOLS
▼=0
▽=0

GENERAL TOLERANCES (UNLESS SPECIFIED)

	mm	INCH
4 PLACES	± ---	± ---
3 PLACES	± ---	± ---
2 PLACES	± 0.1	± ---
1 PLACE	± 0.2	± ---
ANGULAR ±---°		

DRAFT WHERE APPLICABLE MUST REMAIN WITHIN DIMENSIONS

DIMENSION STYLE: MM ONLY
SCALE: 1.5:1
DESIGN UNITS: METRIC
THIRD ANGLE PROJECTION

		DATE
DRAWN BY	JOCONNOR	2011/05/18
CHECKED BY	DMAHER	2011/05/19
APPROVED BY	EFOLAN	2011/06/07

TITLE: S02 SERIES INTERNAL THREAD

MOLEX INCORPORATED

MATERIAL NO.: SEE CHART
DOCUMENT NO.: SD-121064-005
SHEET NO.: 3 OF 3
SIZE: A2

THIS DRAWING CONTAINS INFORMATION THAT IS PROPRIETARY TO MOLEX INCORPORATED AND SHOULD NOT BE USED WITHOUT WRITTEN PERMISSION

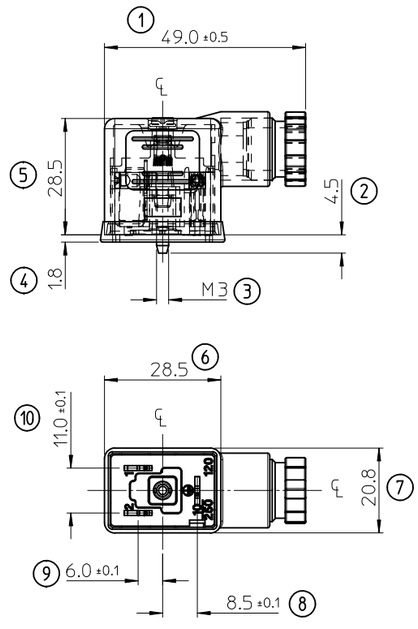

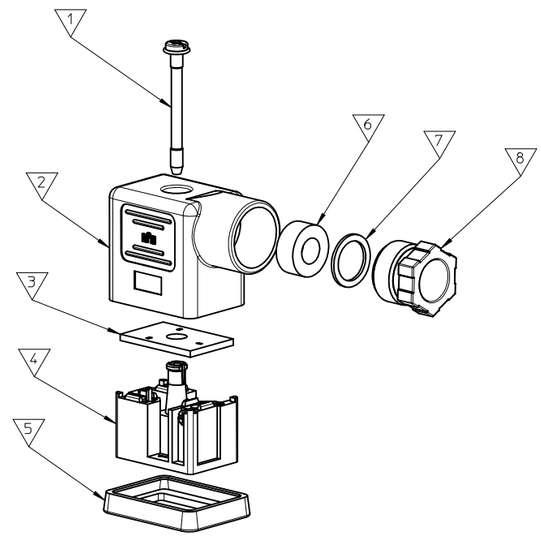

ITEM	DESCRIPTION
1	SCREW
2	INTERNAL THREAD COVER
3	PCB
4	INSERT
5	GASKET
6	GROMMET
7	METAL WASHER
8	INTERNAL THREAD NUT

NOTES

1. PRODUCT SPEC: SEE PS-121201-001
2. PACKAGING SPEC: SEE PK-121064-S02
3. CABLE SIZES 6 - 8 mm DIAMETER

LAST INSPECTION NUMBER USED 10

FPIR UPDATE
EC NO: WEU2011-0227
DRWN:DMAHER_WEU 2010/11/01
CHKD:
APPR:EFOLAN 2010/11/12
REV B

QUALITY SYMBOLS
▼=0
Ⓒ=0

GENERAL TOLERANCES (UNLESS SPECIFIED)

	mm	INCH
4 PLACES	± ---	± ---
3 PLACES	± ---	± ---
2 PLACES	± 0.10	± ---
1 PLACE	± 0.20	± ---
ANGULAR ±---°		

DRAFT WHERE APPLICABLE MUST REMAIN WITHIN DIMENSIONS

DIMENSION STYLE: MM ONLY
SCALE: 1:1
DESIGN UNITS: METRIC
THIRD ANGLE PROJECTION

DRAWN BY	DCARTON
DATE	2010/06/16
CHECKED BY	DMAHER
DATE	2010/06/16
APPROVED BY	EFOLAN
DATE	2010/11/12

TITLE: S02209TC3H1

MOLEX INCORPORATED

MATERIAL NO.: 1210640094
DOCUMENT NO.: SD-121064-094
SHEET NO.: 1 OF 1
SIZE: A3

THIS DRAWING CONTAINS INFORMATION THAT IS PROPRIETARY TO MOLEX INCORPORATED AND SHOULD NOT BE USED WITHOUT WRITTEN PERMISSION