Part Number : 15040345
Product Description : Mini-Fit Jr. Strain Relief, 12 Circuits, Natural
Series Number : 41995
Status : Active
Product Category : Connector Accessories
Engineering Number : 4199512

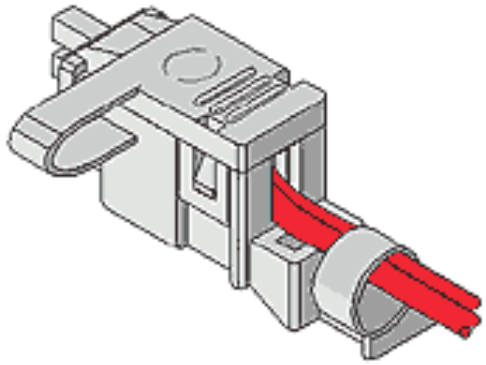

Documents & Resources

Specifications

PK-41995-001-001.pdf
PS-41995-001-001.pdf

Product Environment Compliance

Compliance

GADSL/IMDS	Not Relevant
China RoHS	
EU ELV	Not Relevant
Low-Halogen Status	Low-Halogen per IEC 61249-2-21
REACH SVHC	Not Contained per D(2024)4144-DC (27 June 2024)
EU RoHS	Compliant per EU 2015/863

Multiple Part Product Compliance Statements

- Eu RoHS
- REACH SVHC
- Low-Halogen

Multiple Part Industry Compliance Documents

- IPC 1752A Class C
- IPC 1752A Class D
- Molex Product Compliance Declaration
- IEC-62474

- chemSHERPA (xml)

EU RoHS Certificate of Compliance

Part Details

General

Status	Active
Category	Connector Accessories
Series	41995
Description	Mini-Fit Jr. Strain Relief, 12 Circuits, Natural
Component Type	Strain Relief
Product Name	Mini-Fit Jr.
UPC	800754221818

Physical

Circuits (Loaded)	12
Circuits (maximum)	12
Color - Resin	Natural
Gender	Dual
Material - Resin	Nylon
Net Weight	6.582/g
Number of Rows	2
Packaging Type	Bag
Temperature Range - Operating	-40° to +105°C

Use with Part(s)

Description	Part Number
Mini-Fit Jr. Receptacle Housings	5557
Mini-Fit Jr. Plug Housings	5559