Part Number : 1731120064
Product Description : FCT Metal Dust Cap for Size 2 Male D-sub, #4-40 Thread Screws
Series Number : 173112
Status : Active
Product Category : D-Sub Accessories
Engineering Number : FSSK2S

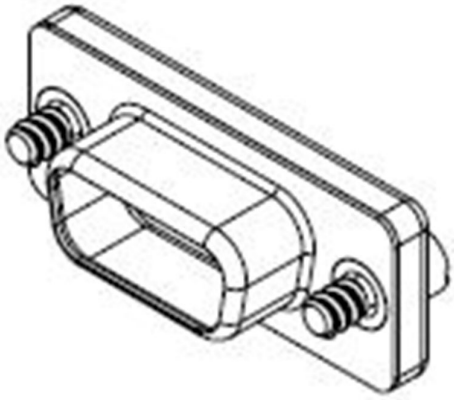

Documents & Resources

Specifications
1731120002-PK-000.pdf

Product Environment Compliance

Compliance

GADSL/IMDS	Not Relevant
China RoHS	
EU ELV	Not Relevant
Low-Halogen Status	Not Reviewed per IEC 61249-2-21
REACH SVHC	Contains Lead per D(2024)6225-DC (07 Nov 2024)
EU RoHS	Compliant with Exemption 6(c) per EU 2015/863

Multiple Part Product Compliance Statements
- Eu RoHS
- REACH SVHC
- Low-Halogen

Multiple Part Industry Compliance Documents
- IPC 1752A Class C
- IPC 1752A Class D
- Molex Product Compliance Declaration
- IEC-62474

- chemSHERPA (xml)

EU RoHS Certificate of Compliance

Part Details

General

Status	Active
Category	D-Sub Accessories
Series	173112
Description	FCT Metal Dust Cap for Size 2 Male D-sub, #4-40 Thread Screws
IP Rating	IP20
Magnetic	Yes
Product Name	FCT Products
Type	Connector or Backshell
UPC	889056323840

Electrical

Shield Type	Solid Metal
Shielded	Yes

Physical

Accessory Type	Dust Cap
Material - Body	Zinc Die Cast
Material - Screw	Tin-plated Brass
Net Weight	11.000/g
Number of Screws	2
Packaging Type	Bag
Plating - Dust Cap	Nickel
Thread Size	4-40 UNC
Thread Type	Standard

Use with Part(s)

Description	Part Number
Use With	FCT D-Sub, Size 2, Male