Part Number : 1731120256
Product Description : FCT Knurled Thumb Screw Lock, #4-40 Thread, 27.3mm Length, Nickel-plated Brass
Series Number : 173112
Status : Active
Product Category : D-Sub Accessories
Engineering Number : FRS1/5-K333

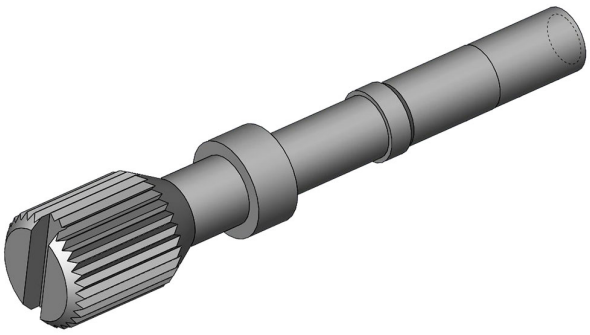

Product Environment Compliance

Compliance

GADSL/IMDS	Compliant with Exemption 3; 33; 34
China RoHS	
EU ELV	Not Relevant
Low-Halogen Status	Not Reviewed per IEC 61249-2-21
REACH SVHC	Contains Lead per D(2024)4144-DC (27 June 2024)
EU RoHS	Compliant with Exemption 6(c) per EU 2015/863

Multiple Part Product Compliance Statements

- Eu RoHS
- REACH SVHC
- Low-Halogen

Multiple Part Industry Compliance Documents

- IPC 1752A Class C
- IPC 1752A Class D
- Molex Product Compliance Declaration
- IEC-62474
- chemSHERPA (xml)

EU RoHS Certificate of Compliance

Part Details

General

Status	Active
Category	D-Sub Accessories
Series	173112
Description	FCT Knurled Thumb Screw Lock, #4-40 Thread, 27.3mm Length, Nickel-plated Brass
IP Rating	N/A
Magnetic	Yes
Product Name	FCT Products
Type	Backshell
UPC	889056682756

Physical

Accessory Type	Locking Mechanism
Material - Body	Brass
Net Weight	3.100/g
Packaging Type	Bag
Thread Size	4-40 UNC
Thread Type	Standard