Part Number : 1731120273
Product Description : FCT Female Screw Lock, #4-40 Inner Thread and M3 Outer Thread, 12.70mm Length, Tin-Plated Steel
Series Number : 173112
Status : Active
Product Category : D-Sub Accessories
Engineering Number : F-GSCH1/5-K126SN

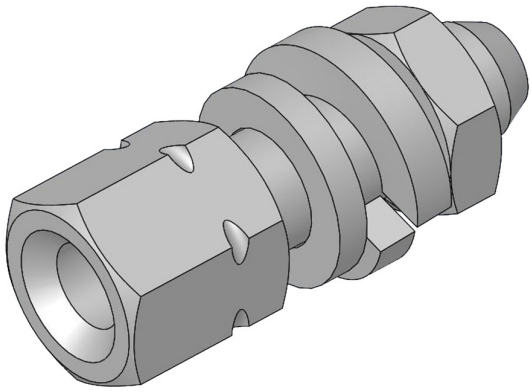

Documents & Resources

Drawings
1731120273_sd.pdf

Product Environment Compliance

Compliance

GADSL/IMDS	Not Relevant
China RoHS	
EU ELV	Not Relevant
Low-Halogen Status	Not Reviewed per IEC 61249-2-21
REACH SVHC	Contains Lead per D(2024)6225-DC (07 Nov 2024)
EU RoHS	Compliant with Exemption 6(a) per EU 2015/863

Multiple Part Product Compliance Statements
- Eu RoHS
- REACH SVHC
- Low-Halogen

Multiple Part Industry Compliance Documents
- IPC 1752A Class C
- IPC 1752A Class D
- Molex Product Compliance Declaration
- IEC-62474

- chemSHERPA (xml)

EU RoHS Certificate of Compliance

Part Details

General

Status	Active
Category	D-Sub Accessories
Series	173112
Description	FCT Female Screw Lock, #4-40 Inner Thread and M3 Outer Thread, 12.70mm Length, Tin-Plated Steel
IP Rating	N/A
Magnetic	Yes
Product Name	FCT Products
Type	Connector or Backshell
UPC	889056721561

Physical

Accessory Type	Locking Mechanism
Material - Body	Steel
Net Weight	1.400/g
Packaging Type	Bag
Thread Size	M3 / 4-40 UNC
Thread Type	Standard