Part Number : 1731120405
Product Description : FCT Slotted Screw for Latch Lock Mounting, #4-40 Thread, Steel
Series Number : 173112
Status : Active
Product Category : D-Sub Accessories
Engineering Number : FSGK1/5

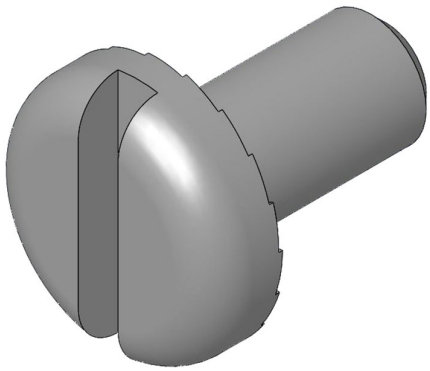

Documents & Resources

Specifications
1731120003-PK-000.pdf

Product Environment Compliance

Compliance

GADSL/IMDS	Not Relevant
China RoHS	
EU ELV	Not Relevant
Low-Halogen Status	Not Reviewed per IEC 61249-2-21
REACH SVHC	Not Contained per D(2024)4144-DC (27 June 2024)
EU RoHS	Compliant with Exemption 6(a) per EU 2015/863

Multiple Part Product Compliance Statements
- Eu RoHS
- REACH SVHC
- Low-Halogen

Multiple Part Industry Compliance Documents
- IPC 1752A Class C
- IPC 1752A Class D
- Molex Product Compliance Declaration
- IEC-62474

- chemSHERPA (xml)

EU RoHS Certificate of Compliance

Part Details

General

Status	Active
Category	D-Sub Accessories
Series	173112
Description	FCT Slotted Screw for Latch Lock Mounting, #4-40 Thread, Steel
IP Rating	N/A
Magnetic	Yes
Product Name	FCT Products
Type	Backshell
UPC	191128209649

Physical

Accessory Type	Slotted Screw
Material - Body	Steel
Net Weight	0.400/g
Packaging Type	Bag
Thread Size	4-40 UNC
Thread Type	Standard