Part Number : 1731120433
Product Description : FCT Latch Screw for Locking Hook, for Front or Rear Mounting, M3, Tin-plated Steel
Series Number : 173112
Status : Active
Product Category : D-Sub Accessories
Engineering Number : F62M114S245+S

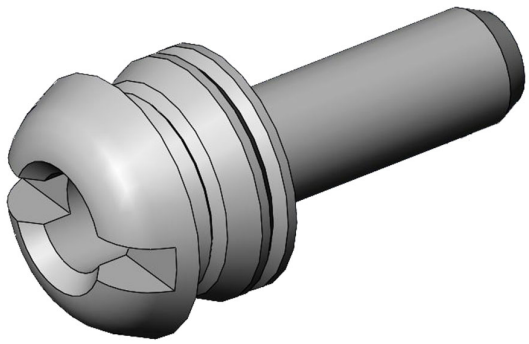

Documents & Resources

Drawings
1731120433_sd.pdf

Specifications
1731120003-PK-000.pdf

Product Environment Compliance

Compliance

GADSL/IMDS	Not Relevant
China RoHS	
EU ELV	Not Relevant
Low-Halogen Status	Not Reviewed per IEC 61249-2-21
REACH SVHC	Contains Lead per D(2024)6225-DC (07 Nov 2024)
EU RoHS	Compliant with Exemption 6(a)-I per EU 2015/863

Multiple Part Product Compliance Statements
- Eu RoHS
- REACH SVHC
- Low-Halogen

Multiple Part Industry Compliance Documents
- IPC 1752A Class C

- IPC 1752A Class D
- Molex Product Compliance Declaration
- IEC-62474
- chemSHERPA (xml)

EU RoHS Certificate of Compliance

Part Details

General

Status	Active
Category	D-Sub Accessories
Series	173112
Description	FCT Latch Screw for Locking Hook, for Front or Rear Mounting, M3, Tin-plated Steel
IP Rating	N/A
Magnetic	Yes
Product Name	FCT Products
Type	Backshell
UPC	191128225625

Physical

Accessory Type	Latch Screw
Material - Body	Steel
Net Weight	1.500/g
Packaging Type	Bag
Thread Size	M3 / M3
Thread Type	Standard