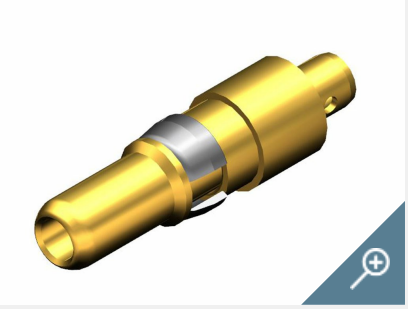

1731121758

Status: Active

Series: 173112 >

Note:

Part number not found in our online catalog.
Limited information available.

Request Design Support

Engineering Documents | Product Environment Compliance

Sales Drawings, 3D Models, and Brochures:

Do You Have Any Questions About This Product?

Contact Us

Molex® is a registered trademark of Molex, LLC in the United States of America and may be registered in other countries; all other trademarks listed herein belong to their respective owners.

© Copyright 2023