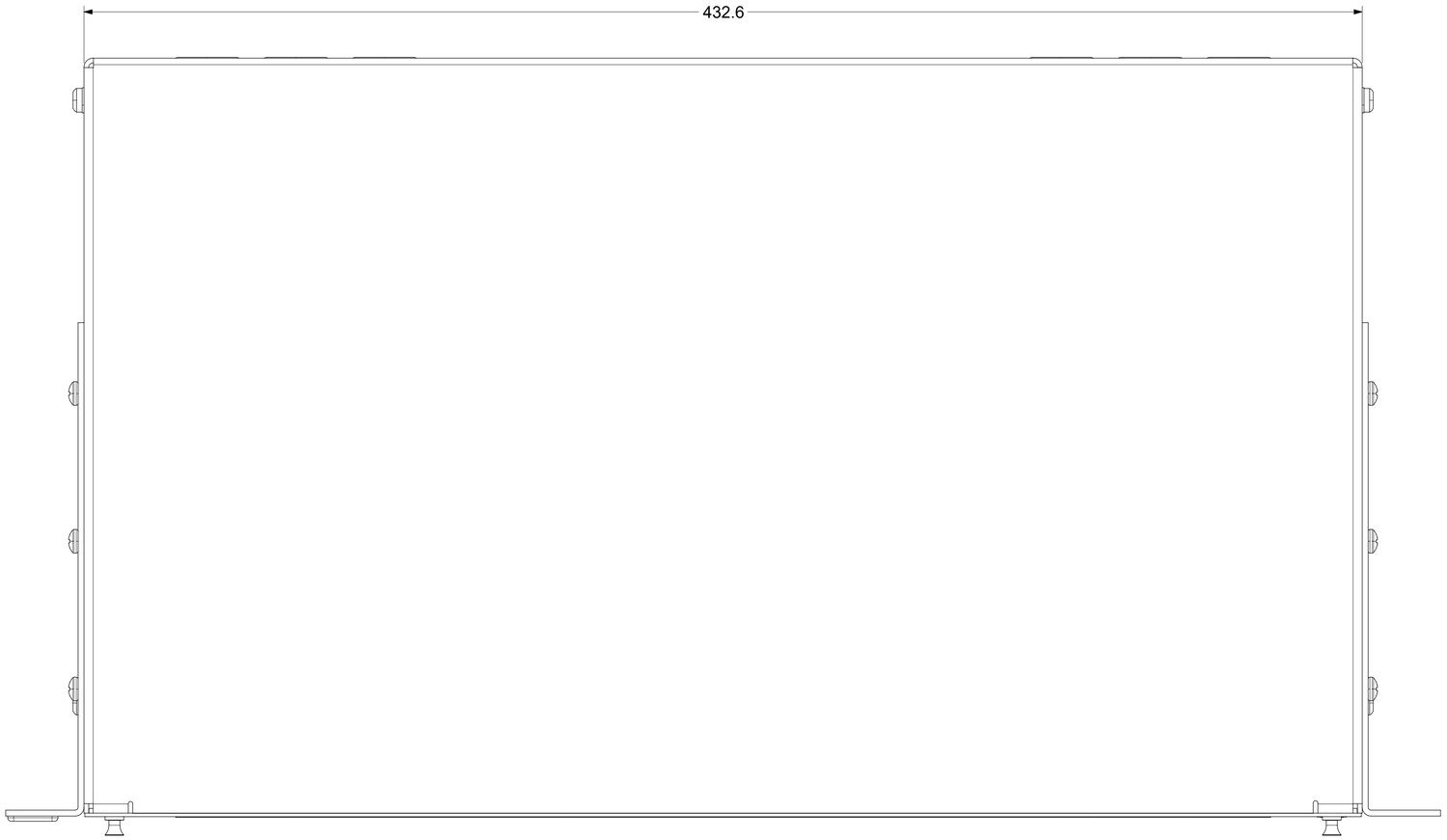

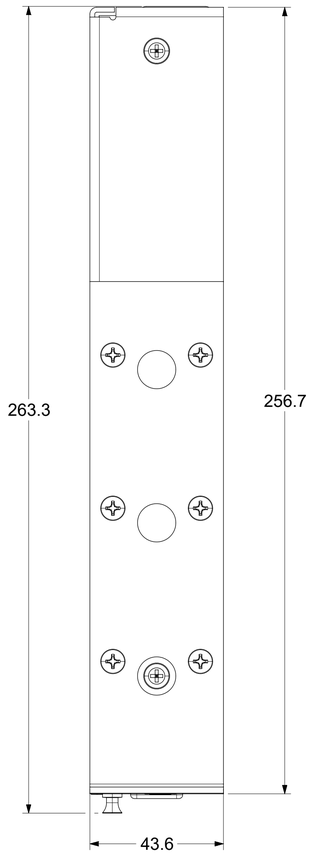

NOTES:

1. MATERIAL:
   A. CHASSIS AND COVER - COLD ROLLED STEEL.
   B. MOUNTING EAR - COLD ROLLED STEEL.
2. FINISH: GREY POWDER COAT OR BLACK POWDERCOAT
3. ACCESSORY KIT CONTAINING THE FOLLOWING ITEMS IS PACKED IN A SEALED BAG

DESCRIPTION	QTY
SCR NST M4X10MM PAN PHL MS ST BLACK ZINC	12
CABLE GLAND 7-14MM-M20 PA6 JETBLACK	1
ZIPLOCK POLYBAG 200 mm x 310 mm FOR A hardware KIT ITEMS	1
CBL TIE 200MM 202-4.7-NT	4
STRAIN RELIEF KIT-TC271-01-4KIT	1
M3 X 35MM SCREW PAN Z/P	2
M3 BRASS HEX NUT	2
METRIC KIT RACK/CABINET SCREW,CAGENUT AND WASHER, BLACK-SET OF 4	1

4. 24 P SLD DWR LBL LH/RH, ARE SHOWN IN ASSEMBLED CONDITION, WHERE AS IT IS WRAPPED IN A PLASTIC SHEET AND PLACED INSIDE CORRUGATED BOX.
5. GROMMET AND PLUNGERS ARE SHOWN IN ASSEMBLED CONDITION, WHERE AS IT IS PLACED INSIDE THE ACCESORY KIT.
6. ENCLOSURE ALONG WITH THE ACCESSORY KIT PACKED IN A CORRUGATED BOX.
7. PRODUCT PACKAGING LABEL CONTAINS QR CODE FOR INSTALLATION INSTRUCTIONS AND WHERE QR CODE IS NOT AVAILABLE HARD COPY WILL BE SUPPLIED.

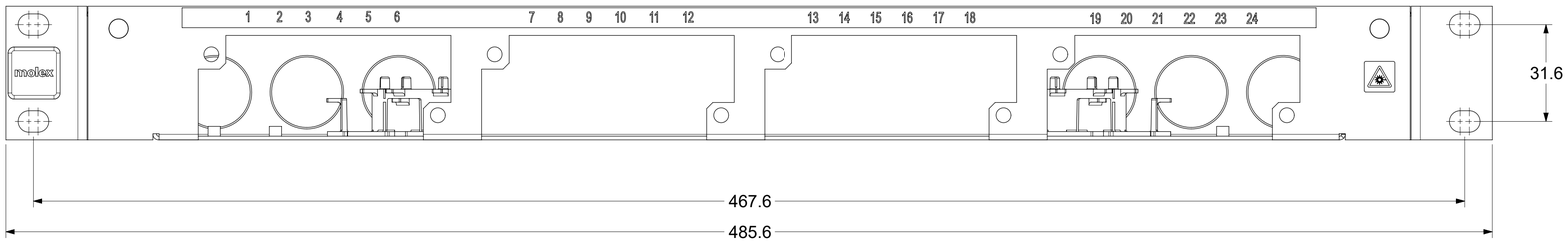

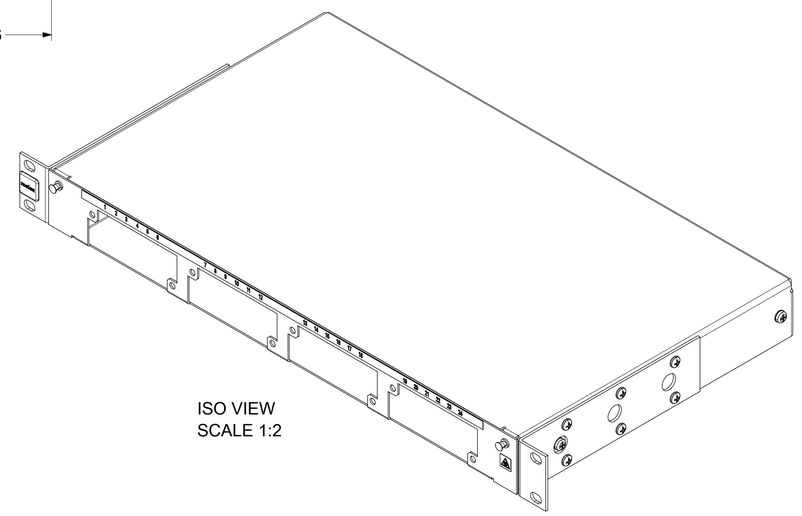

ISO VIEW
SCALE 1:2

PART NUMBERS TABLE:		
MPN NO.	SAP NO.	DESCRIPTION
RFR-00082	180370098	24P CONFGRBLE FIBER SLDNG DRAWER GRAY
RFR-00082-I	180370099	24P CONFGRBLE FIBER SLDNG DRAWER GRAY-IN
RFR-00082-04	180660080	24P CONFGRBLE FIBER SLDNG DRAWER BLACK
RFR-00082-04-I	180660081	24P CONFGRBLE FIBER SLDNG DRAWER BLACK-IN

THIS DRAWING CONTAINS INFORMATION THAT IS PROPRIETARY TO MOLEX ELECTRONIC TECHNOLOGIES, LLC AND SHOULD NOT BE USED WITHOUT WRITTEN PERMISSION

FUNCTIONAL SYMBOLS
EA = 0
EC = 0
ED = 0
DIVISIONAL SYMBOLS

DIMENSION UNITS: mm
SCALE: 1:1

GENERAL TOLERANCES (UNLESS SPECIFIED)

ANGULAR TOL	± °
4 PLACES	±
3 PLACES	±
2 PLACES	±
1 PLACE	± 2.0
0 PLACES	±

DRAFT WHERE APPLICABLE MUST REMAIN WITHIN DIMENSIONS

CURRENT REV DESC:

EC NO: 705558
DRWN: ANILM3 2022/04/14
CHK'D: RCG 2022/09/06
APPR: RCG 2022/09/06

INITIAL REVISION:
DRWN: MCS 2011/01/12
APPR: RCG 2011/02/24

molex

24 PORT CONFIGURABLE FIBER SLIDING DRAWER

PRODUCT CUSTOMER DRAWING

DOCUMENT NUMBER	DOC TYPE	DOC PART	REVISION
SD-18037-100	PSD	001	E

THIRD ANGLE PROJECTION	DRAWING	SERIES	MATERIAL NUMBER	CUSTOMER	SHEET NUMBER
	A1-SIZE	18037	SEE TABLE	GENERAL MARKET	1 OF 1

DOCUMENT STATUS	P1	RELEASE DATE	2022/09/06 14:38:48