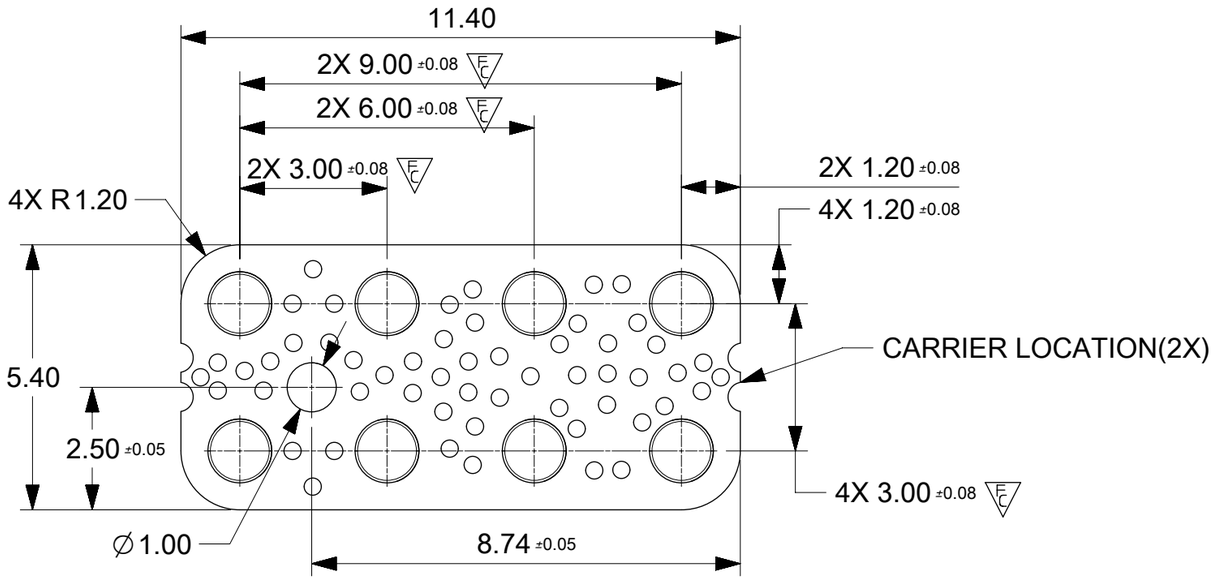

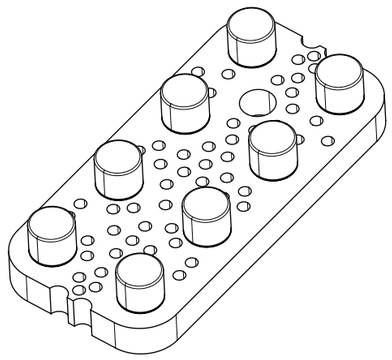

WITHOUT P&P CAP

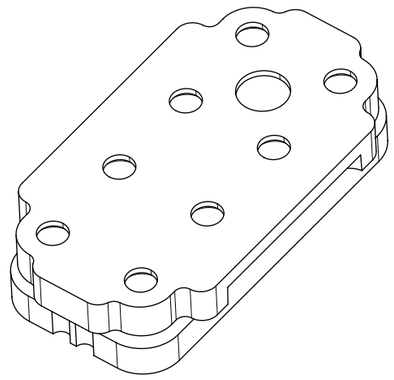

WITH P&P CAP

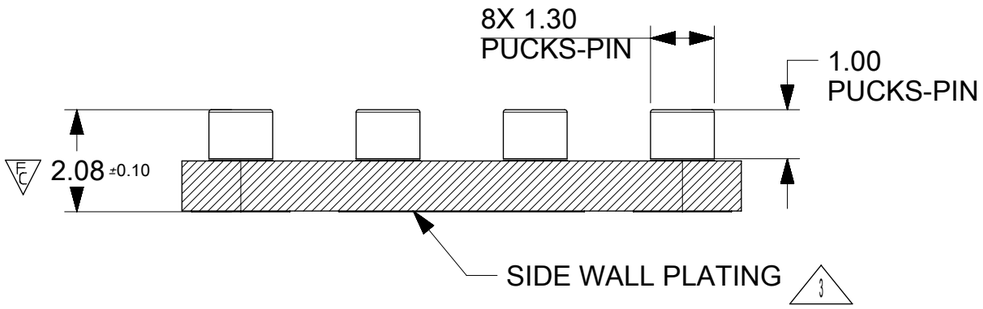

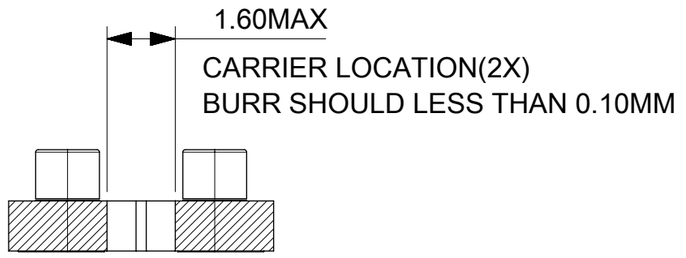

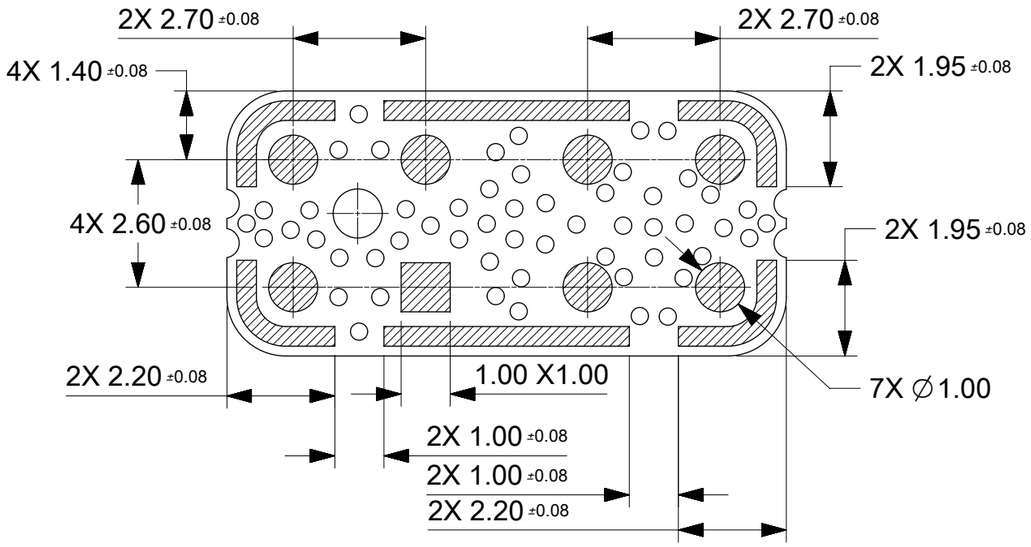

NOTES:
1. MATERIAL :
   PCB: HF,FR-4
   PUCKS : PHOS-BRONZE
2. PEELING FORCE: 20N MIN
3. SIDE WALL HAVE GOLD PLATING.
4. PACKAGE: TAPE AND REEL, DETAIL SEE DRAWING 2026773000.
5. COMPLIANT TO RoHS DIRECTIVE 2011/65/EU/AND ELV DIRECTIVE 2000/53 EC.

QUALITY SYMBOLS	
EA	= 0
EC	= 0
EP	= 0
▼	= 0
C	= 0
☒	= 0
■	= 0
V	= 0

THIS DRAWING CONTAINS INFORMATION THAT IS PROPRIETARY TO MOLEX ELECTRONIC TECHNOLOGIES, LLC AND SHOULD NOT BE USED WITHOUT WRITTEN PERMISSION

NEW RELEASE 2017/06/20 2017/09/12
EC NO: 118053
DRWN: FCHEN11
CHK'D:
APPR: AYIN

REV: A

GENERAL TOLERANCES (UNLESS SPECIFIED)

ANGULAR TOL ±	°	
4 PLACES	±	
3 PLACES	±	
2 PLACES	±	0.1
1 PLACE	±	0.15
0 PLACES	±	

DRAFT WHERE APPLICABLE MUST REMAIN WITHIN DIMENSIONS

DIMENSION UNITS	MM
SCALE	1:1
DRWN BY	FCHEN11
DATE	2017/06/19
CHK'D BY	
DATE	
APPR BY	AYIN
DATE	2017/09/12
DRAWING SIZE	A3
THIRD ANGLE PROJECTION	

molex®

INTERPOSER PCBA-2.08

PRODUCT CUSTOMER DRAWING

SERIES	MATERIAL NUMBER	CUSTOMER
202677	2026770004	

DOCUMENT NUMBER	DOC TYPE	DOC PART	SHEET NUMBER
2026770004	PSD	000	1 OF 1

RELEASE STATUS	P1	RELEASE DATE	12.09.2017 00:51:47