## TABLE OF CONTENTS


| SHEET NO. | SHEET DESCRIPTION |
|---|---|
| 1 | NOTES AND BOM |
| 2-4 | WDC PACKAGING |


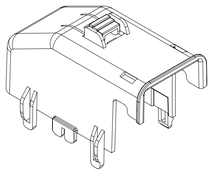

TOP LATCH

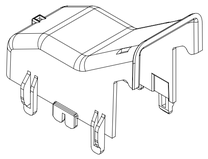

END LATCH

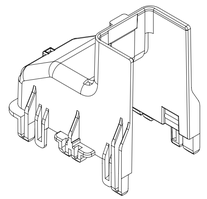

STRAIGHT WIRE DRESS

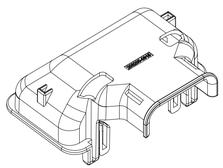

90 DEGREE

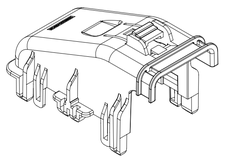

TOP LATCH LOW PROFILE

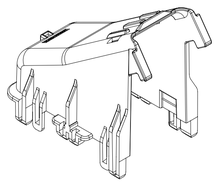

END LATCH LARGE VOLUME

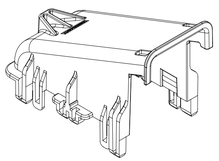

END LATCH LOW PROFILE

NOTES: VALID UNLESS OTHERWISE SPECIFIED

1. GENERAL:
   a. APPLICATION SPECIFICATION SEE: AS-34992-001
      -CONTAINS: PRODUCT INTRODUCTION, PRODUCT SUMMARY, CONNECTOR ASSEMBLY, PACKAGING INFORMATION, CONNECTOR MATING, SERVICE INSTRUCTIONS, ELECTRICAL CONTINUITY CHECKING, CRIMPING, AND TROUBLESHOOTING.
   b. PRODUCT SPECIFICATION SEE: PS-34992-001
      CONTAINS: PRODUCT INTRODUCTION, PRODUCT SUMMARY, RATINGS (CURRENT, TEMPERATURE, AND FLAMMABILITY), AND PRODUCT VALIDATION.
   c. PACKAGING SPECIFICATION PER MOLEX DRAWING: TBD
   d. PARTS MUST BE IN COMPLIANCE TO MOLEX CHEMICAL SUBSTANCES FOR PRODUCTS AND PACKAGING SPECIFICATION: QEHS-699000-300
   e. DATA MUST BE SUBMITTED UNDER THE MOLEX PART NUMBER TO IMDS (COMPANY ID#13255)
   f. FLAMMABILITY REQUIREMENT: PER ISO3795 OR GM3191
      1. BURN RATE 100mm/MIN MAXIMUM
      2. MATERIAL MUST BE SELF EXTINGUISHING

2. DESIGN - MATERIALS:
   a. SEE BOM TABLE FOR MATERIAL
   b. REGRIND 25% MAX BY WEIGHT

3. DESIGN - GEOMETRY:
   a. ALL GRAPHIC DATA IS BASIC (NO TOLERANCE) AND MUST BE TAKEN FROM THE DATA FILE AT ITS LATEST REVISION.
   b. GEOMETRIC DIMENSIONS AND TOLERANCES PER ASME Y14.5M-2009
   c. EDGES AND UNDIMENSIONED DETAILS PER ISO13715
   d. CORNERS SHOWN AS SHARP TO BE R 0.2 MAX.
   e. LETTERING SHALL BE 0.15 MAX RAISED IN 0.25 MAX RECESS PAD. THIS INCLUDES RECYCLING CODE, CAVITY ID, VENDOR IDENTIFICATION, AND CUSTOMER MATERIAL NUMBER.
   f. LASER MARKING: N/A

4. DESIGN - MANUFACTURING:
   a. ALLOWABLE FLASH MAX 0.20 HIGH BY MAX 0.13 THICK.
   b. ALLOWABLE SPLIT/PARTING LINE MISMATCH 0.2 MAX.
   c. EJECTOR PIN MARKS TO BE FLUSH TO 0.25 MAX DEPRESSED. LOCATION MUST BE APPROVED BY PRODUCT ENGINEERING. EJECTOR PIN MARKS NOT PERMISSIBLE ON OR NEAR DATUM TARGET AREA.
   d. ALLOWABLE GATE VESTIGE FLUSH TO 0.25 MAX RECESS. LOCATION MUST BE APPROVED BY PRODUCT ENGINEERING.
   e. VISUAL DEFECTS SHALL MEET COSMETIC STANDARD PS-45499-002 (Class B).
   f. NO EXTERNAL MOLD RELEASE AGENT ALLOWED DURING MANUFACTURING.

△5. DESIGN SPECIFIC APPLICATION NOTES:
   a. SEE AS-34992-001

## BILL OF MATERIALS (BOM)

| DESCRIPTION | PART NUMBER | CHARTED DIMENSIONS (A) (MM) | (B) (MM) | (C) (MM) | COLOR | MATERIAL | NOTES | STATUS |
|---|---|---|---|---|---|---|---|---|
| CONDUIT (19mm) | 34992-0906 | SEE SD-34992-906 | | | | | | SALEABLE |
| | 34992-0908 | | | | | | RESTRICTED | SALEABLE |
| CONDUIT (25mm) | 34992-0907 | | | | | | | SALEABLE |
| | 34992-0909 | | | | | | RESTRICTED | SALEABLE |
| | 2032000919 | | | | | | DRAIN HOLES | SALEABLE |
| TOP LATCH | 203200-0901 | 36.74 | 66.44 | 44.58 | BLACK | PA66 GF35 | | SALEABLE |
| END LATCH | 203200-0902 | 36.74 | 64.15 | 51.64 | BLACK | PA66 GF35 | GECU COMPATIBLE | SALEABLE |
| | 203200-0903 | 36.74 | 64.15 | 51.64 | BLACK | PA66 GF35 | RESTRICTED | SALEABLE |
| STRAIGHT WIRE DRESS | 203200-0904 | 37.19 | 56.18 | 54.28 | BLACK | PA66 GF35 | | SALEABLE |
| 90 DEG LARGE VOLUME | 203200-0905 | 63.25 | 56.48 | 33.27 | BLACK | PA66 GF35 | | OBSOLETE |
| 90 DEGREE | 203200-0915 | 63.25 | 56.48 | 33.27 | BLACK | PA66 GF35 | BUNDLE RESTR. △5 | SALEABLE |
| END LATCH LARGE VOLUME | 203200-0910 | 37.19 | 65.87 | 57.00 | BLACK | PA66 GF35 | GECU COMPATIBLE | SALEABLE |
| TOP LATCH LOW PROFILE | 203200-0912 | 37.19 | 68.46 | 40.33 | BLACK | PA66 GF35 | GECU LEVER ONLY BUNDLE RESTR. △5 | OBSOLETE |
| | 203200-0916 | 37.19 | 68.46 | 40.33 | BLACK | PA66 GF35 | | SALEABLE |
| END LATCH LOW PROFILE | 203200-0913 | 37.19 | 66.44 | 46.42 | BLACK | PA66 GF35 | GECU COMPATIBLE BUNDLE RESTR. △5 | OBSOLETE |
| | 203200-0917 | 37.19 | 66.44 | 46.42 | BLACK | PA66 GF35 | | SALEABLE |

QUALITY SYMBOLS
△A = 0
△E = 0
△F = 0
▼ = 0
△C = 0
☒ = 0
■ = 0
▽ = 0

EC NO: 653738 2021/02/04
DRWN: NBOHIDAR 2021/06/18
CHK'D: BDICK01
APPR: BDICK01 2021/06/18
REV C10

GENERAL TOLERANCES (UNLESS SPECIFIED)
ANGULAR TOL ± °
4 PLACES ±
3 PLACES ±
2 PLACES ±
1 PLACE ±
0 PLACES ±
DRAFT WHERE APPLICABLE MUST REMAIN WITHIN DIMENSIONS

THIS DRAWING CONTAINS INFORMATION THAT IS PROPRIETARY TO MOLEX ELECTRONIC TECHNOLOGIES, LLC AND SHOULD NOT BE USED WITHOUT WRITTEN PERMISSION

DIMENSION UNITS: mm
SCALE: 2:1
DRWN BY: APROFFITT DATE: 2016/10/05
CHK'D BY: SKRAJENDRANA DATE: 2016/11/04
APPR BY: VKOSHY DATE: 2016/11/04
DRAWING SIZE: D
THIRD ANGLE PROJECTION

molex®

GPCM GENERAL MARKET WIRE DRESS COVER

PRODUCT CUSTOMER DRAWING

| SERIES | MATERIAL NUMBER | CUSTOMER |
|---|---|---|
| 203200 | CHARTED | |

| DOCUMENT NUMBER | DOC TYPE | DOC PART | SHEET NUMBER |
|---|---|---|---|
| 2032000001-SD | PSD | 000 | 1 OF 4 |

| RELEASE STATUS | P1 | RELEASE DATE | 2021/06/18 12:14:17 |
|---|---|---|---|

SHEET DESCRIPTION

WDC PACKAGING

# 203200-0901 - Top Latch

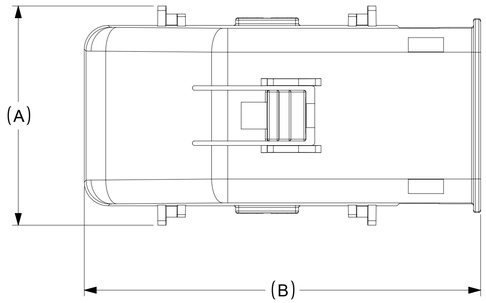


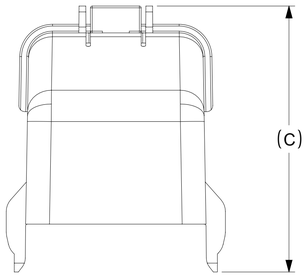


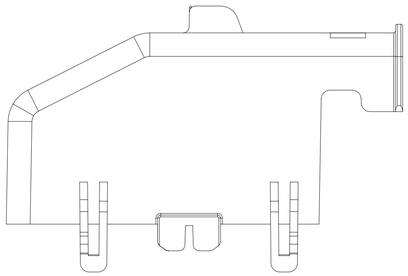

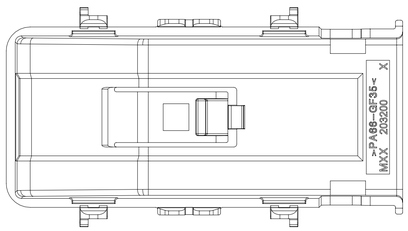


# 203200-0902 - End Latch

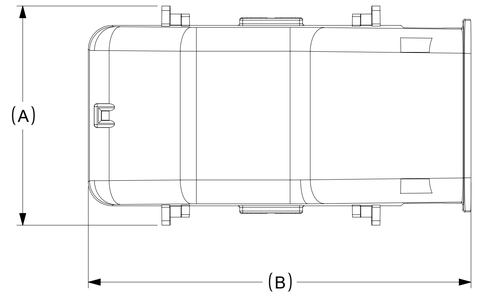


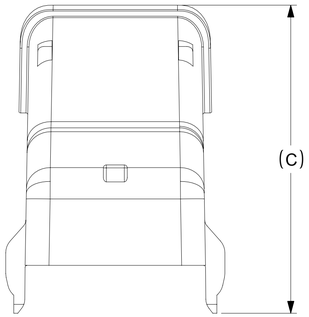


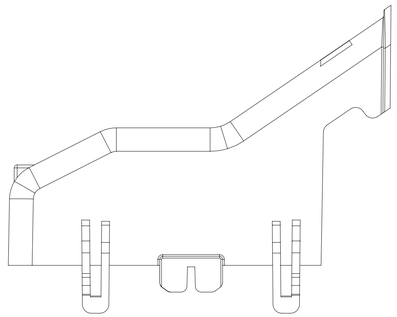

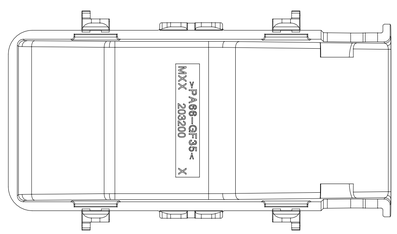


# 203200-0910

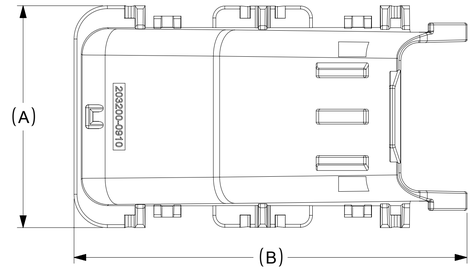


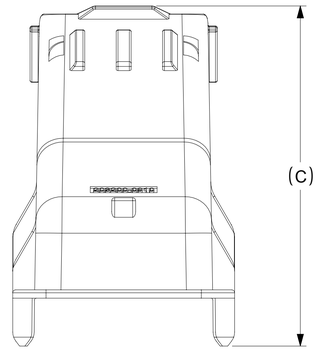


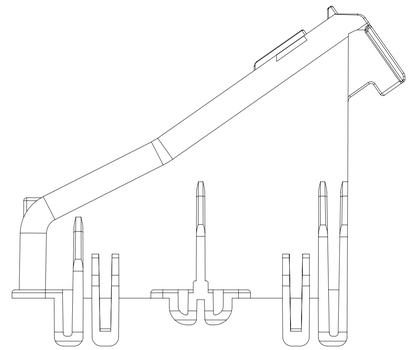

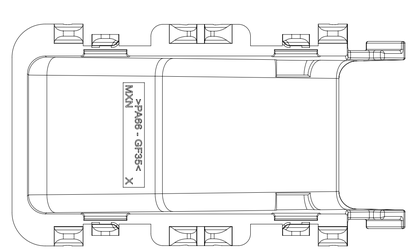


| QUALITY SYMBOLS |
|---|
| A = 0 |
| E = 0 |
| F = 0 |
| = 0 |
| C = 0 |
| = 0 |
| = 0 |
| = 0 |

2021/02/04 EC NO: 653738
2021/06/18 DRWN: NBOHIDAR
2021/06/18 CHK'D: BDICK01
APPR: BDICK01

REV: C10

| GENERAL TOLERANCES (UNLESS SPECIFIED) | |
|---|---|
| ANGULAR TOL ± | ° |
| 4 PLACES | ± |
| 3 PLACES | ± |
| 2 PLACES | ± |
| 1 PLACE | ± |
| 0 PLACES | ± |

DRAFT WHERE APPLICABLE MUST REMAIN WITHIN DIMENSIONS

THIS DRAWING CONTAINS INFORMATION THAT IS PROPRIETARY TO MOLEX ELECTRONIC TECHNOLOGIES, LLC AND SHOULD NOT BE USED WITHOUT WRITTEN PERMISSION

| DIMENSION UNITS | SCALE |
|---|---|
| mm | 2:1 |

| DRWN BY | DATE |
|---|---|
| APROFFITT | 2016/10/05 |
| CHK'D BY | DATE |
| SKRAJENDRANA | 2016/11/04 |
| APPR BY | DATE |
| VKOSHY | 2016/11/04 |

DRAWING SIZE: D

THIRD ANGLE PROJECTION

molex®

GPCM GENERAL MARKET WIRE DRESS COVER

PRODUCT CUSTOMER DRAWING

| SERIES | MATERIAL NUMBER | CUSTOMER |
|---|---|---|
| 203200 | CHARTED | |

| DOCUMENT NUMBER | DOC TYPE | DOC PART | SHEET NUMBER |
|---|---|---|---|
| 2032000001-SD | PSD | 000 | 2 OF 4 |

| RELEASE STATUS | P1 | RELEASE DATE | 2021/06/18 12:14:17 |
|---|---|---|---|

SHEET DESCRIPTION

WDC PACKAGING

# 203200-0903 - End Latch

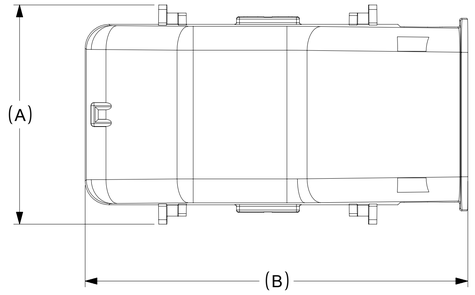


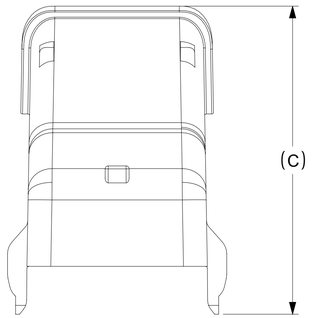


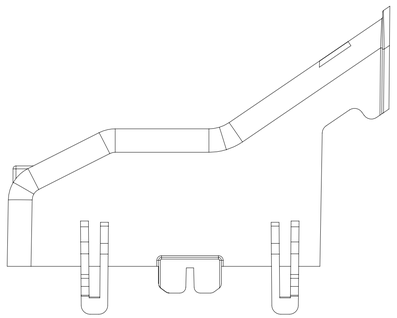

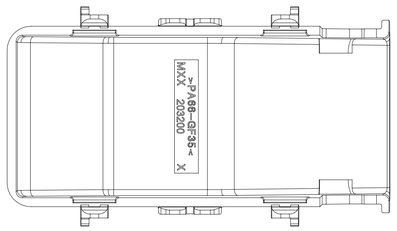


# 203200-0904 - STRAIGHT WIRE DRESS

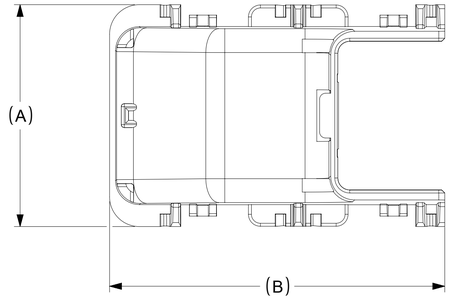


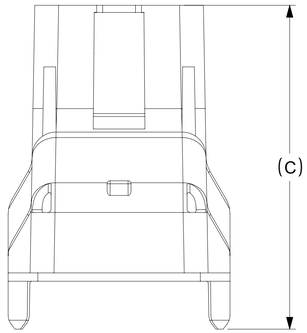


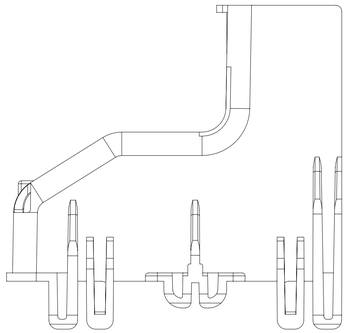

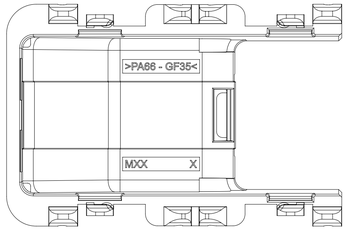


# 203200-0915 - 90 DEGREE

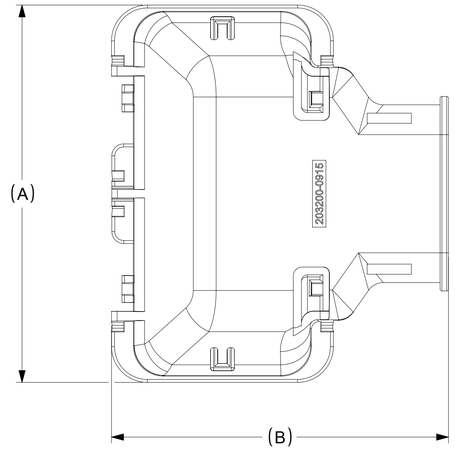


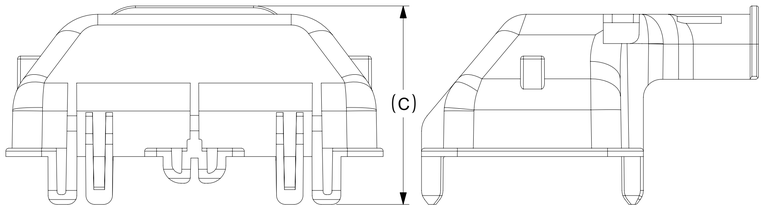


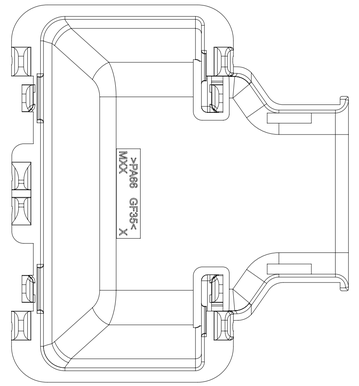


| QUALITY SYMBOLS | |
|---|---|
| A | = 0 |
| B | = 0 |
| C | = 0 |
| D | = 0 |
| E | = 0 |
| F | = 0 |
| G | = 0 |
| H | = 0 |

EC NO: 653738
DRWN: NBOHIDAR 2021/02/04
CHK'D: BDICK01 2021/06/18
APPR: BDICK01 2021/06/18

C10 REV

GENERAL TOLERANCES (UNLESS SPECIFIED)

| | |
|---|---|
| ANGULAR TOL ± | ° |
| 4 PLACES | ± |
| 3 PLACES | ± |
| 2 PLACES | ± |
| 1 PLACE | ± |
| 0 PLACES | ± |

DRAFT WHERE APPLICABLE MUST REMAIN WITHIN DIMENSIONS

THIS DRAWING CONTAINS INFORMATION THAT IS PROPRIETARY TO MOLEX ELECTRONIC TECHNOLOGIES, LLC AND SHOULD NOT BE USED WITHOUT WRITTEN PERMISSION

DIMENSION UNITS: mm
SCALE: 2:1
DRWN BY: APROFFITT DATE: 2016/10/05
CHK'D BY: SKRAJENDRANA DATE: 2016/11/04
APPR BY: VKOSHY DATE: 2016/11/04
DRAWING SIZE: D
THIRD ANGLE PROJECTION

molex®

GPCM GENERAL MARKET WIRE DRESS COVER

PRODUCT CUSTOMER DRAWING

| SERIES | MATERIAL NUMBER | CUSTOMER |
|---|---|---|
| 203200 | CHARTED | |

| DOCUMENT NUMBER | DOC TYPE | DOC PART | SHEET NUMBER |
|---|---|---|---|
| 2032000001-SD | PSD | 000 | 3 OF 4 |

| RELEASE STATUS | P1 | RELEASE DATE | 2021/06/18 12:14:17 |
|---|---|---|---|

SHEET DESCRIPTION

WDC PACKAGING

# 203200-0916 - Top Latch Low Profile

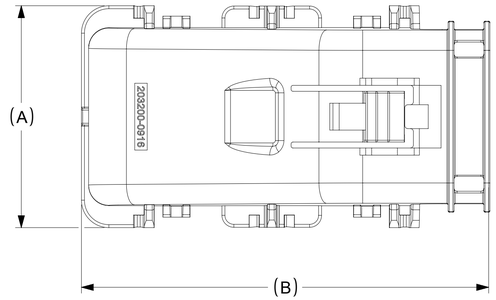


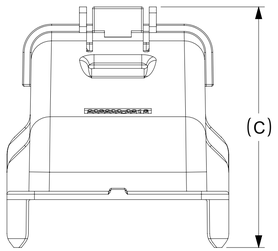


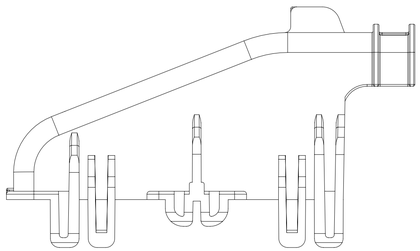

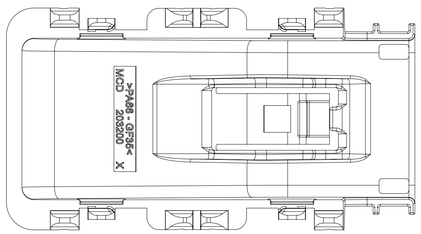


# 203200-0917 - End Latch Low Profile

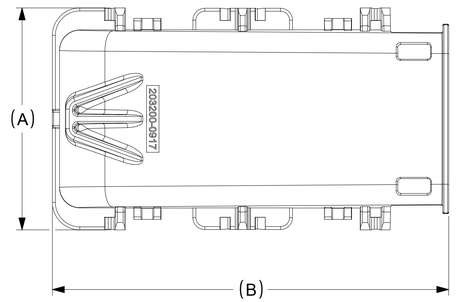


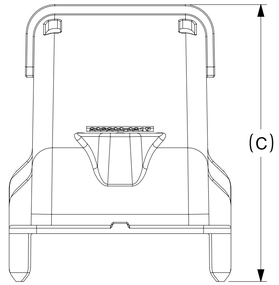


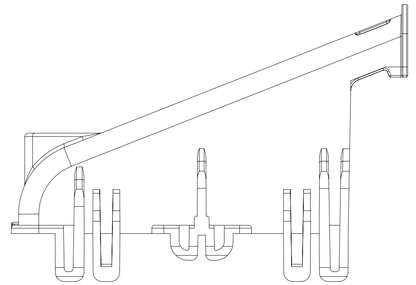

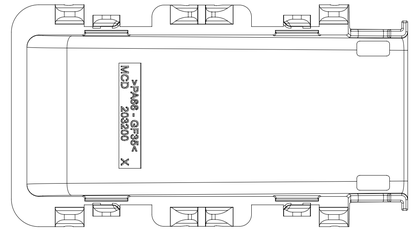


| SYMBOLS | |
|---|---|
| E = 0 | |
| E = 0 | |
| E = 0 | |
| S = 0 | |
| = 0 | |
| C = 0 | |
| = 0 | |
| = 0 | |
| = 0 | |

THIS DRAWING CONTAINS INFORMATION THAT IS PROPRIETARY TO MOLEX ELECTRONIC TECHNOLOGIES, LLC AND SHOULD NOT BE USED WITHOUT WRITTEN PERMISSION

| DIMENSION UNITS | SCALE |
|---|---|
| mm | 2:1 |

GENERAL TOLERANCES (UNLESS SPECIFIED)

| | |
|---|---|
| ANGULAR TOL | ± ° |
| 4 PLACES | ± |
| 3 PLACES | ± |
| 2 PLACES | ± |
| 1 PLACE | ± |
| 0 PLACES | ± |

DRAFT WHERE APPLICABLE MUST REMAIN WITHIN DIMENSIONS

CURRENT REV DESC:

EC NO: 653738

DRWN: NBOHIDAR 2021/02/04

CHK'D: BDICK01 2021/06/18

APPR: BDICK01 2021/06/18

INITIAL REVISION:

DRWN: APROFFITT 2016/10/05

APPR: VKOSHY 2016/11/04

molex

GPCM GENERAL MARKET WIRE DRESS COVER

PRODUCT CUSTOMER DRAWING

| DOCUMENT NUMBER | DOC TYPE | DOC PART | REVISION |
|---|---|---|---|
| 2032000001-SD | PSD | 000 | C10 |

| THIRD ANGLE PROJECTION | DRAWING | SERIES | MATERIAL NUMBER | CUSTOMER | SHEET NUMBER |
|---|---|---|---|---|---|
| | D-SIZE | 203200 | | | 4 OF 4 |

| DOCUMENT STATUS | P1 | RELEASE DATE | 2021/06/18 12:14:17 |
|---|---|---|---|