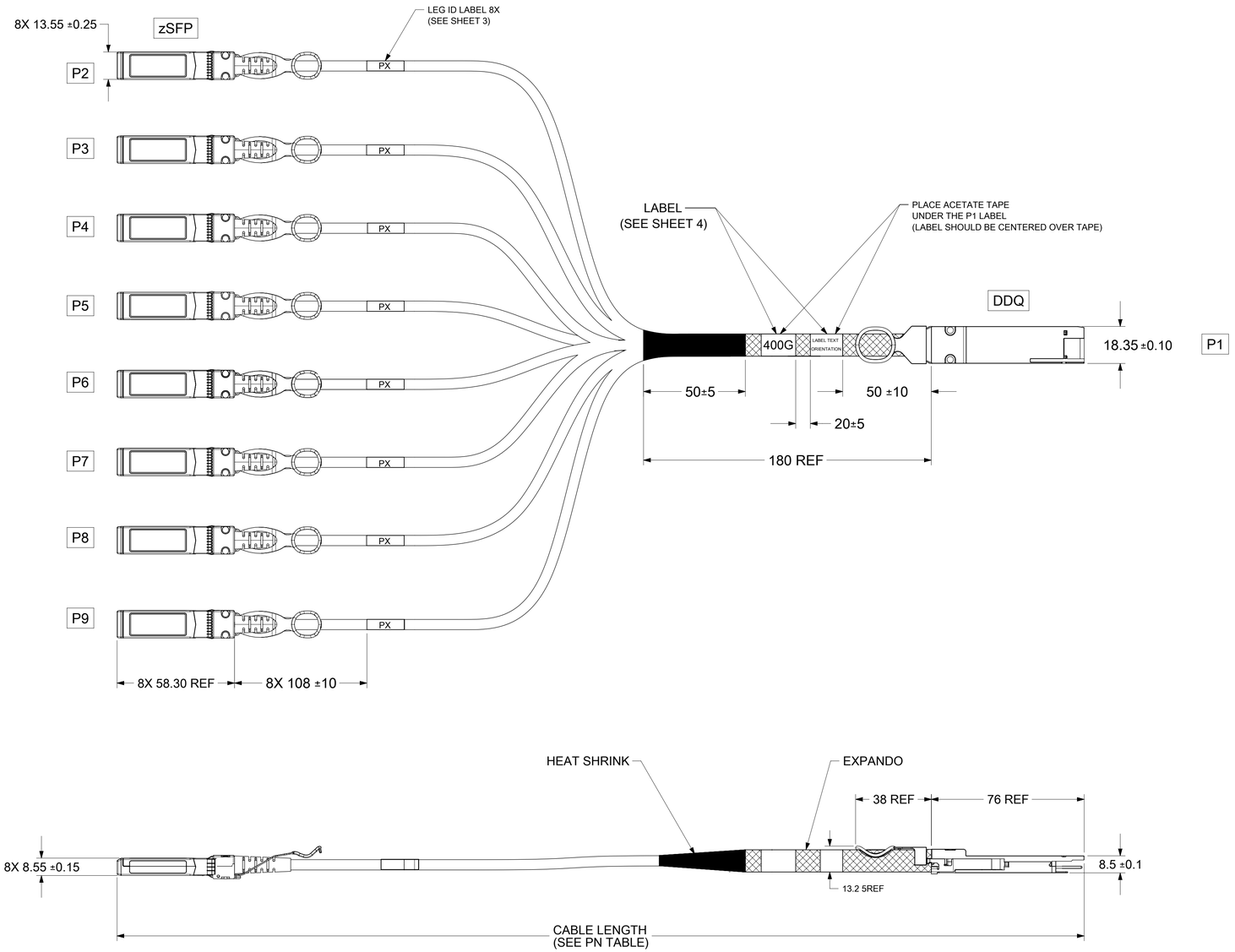

MOLEX P/N	LENGTH (M)	TOL. (MM)	AWG
2058561005	0.5	+/- 50	30
2058561010	1.0	+/- 50	30
2058561015	1.5	+/- 80	30
2058563005	0.5	+/- 50	28
2058563010	1.0	+/- 50	28
2058563015	1.5	+/- 80	28
2058563020	2.0	+/- 80	28
2058563025	2.5	+/- 80	28
2058563030	3.0	+/- 80	26

NOTES:

1. MATERIALS
   BACKSHELLS - NICKEL PLATED ZINC
   ZSFP END DE-LATCH - PLASTIC
   DDQ END DE-LATCH - STAINLESS STEEL WITH OVERMOLDED NYLON
   RIVETS - STAINLESS STEEL
2. EACH ASSEMBLY HAS A SERIAL ID
3. RoHS COMPLIANT, NO EXEMPTIONS.
4. CABLE LENGTH DEPENDS ON WIRE GAUGE, DATA RATE, AND HOST BOARD DRIVER CAPABILITIES
5. IMPEDANCE - 100 OHMS DIFFERENTIAL
6. CABLE IS UL RECOGNIZED PER UL AWM STYLE 21479
7. EEPROM MAP AVAILABLE UPON REQUEST

DOCUMENT STATUS	P1	RELEASE DATE	2022/01/07	04:10:22

FUNCTIONAL SYMBOLS: FA = 0; FC = 0; FE = 0

DIVISIONAL SYMBOLS

THIS DRAWING CONTAINS INFORMATION THAT IS PROPRIETARY TO MOLEX ELECTRONIC TECHNOLOGIES, LLC AND SHOULD NOT BE USED WITHOUT WRITTEN PERMISSION

DIMENSION UNITS	SCALE
mm	1:1.25

GENERAL TOLERANCES (UNLESS SPECIFIED)

ANGULAR TOL	± °
4 PLACES	±
3 PLACES	±
2 PLACES	±
1 PLACE	±
0 PLACES	±

DRAFT WHERE APPLICABLE MUST REMAIN WITHIN DIMENSIONS

CURRENT REV DESC: SHT 2: UPDATED DDQ SIDE BEND RADIUS AND BEND SPACE VALUES

EC NO: 690921

DRWN:	SKAMATHN	2022/01/05
CHK'D:	ADITHK	2022/01/06
APPR:	SCHANNARAYAN	2022/01/07

INITIAL REVISION:

DRWN:	ZDANDURAND	2017/10/25
APPR:	ADTUCKER	2017/10/27

molex

QSFP-DD-8ZSFP 56G CABLE ASSEMBLY

PRODUCT CUSTOMER DRAWING

DOCUMENT NUMBER	DOC TYPE	DOC PART	REVISION
2058561005	PSD	000	L4

THIRD ANGLE PROJECTION | DRAWING: D-SIZE | SERIES: 205856

MATERIAL NUMBER	CUSTOMER	SHEET NUMBER
SEE P/N TABLE	GENERAL MARKET	1 OF 4

DDQ

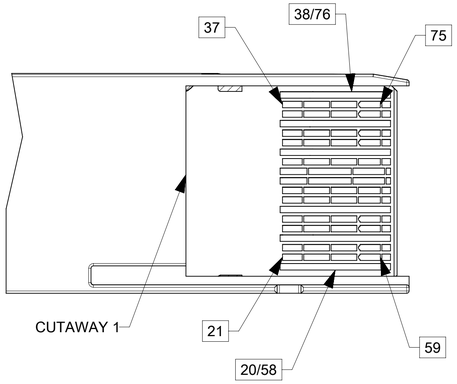

TOP VIEW

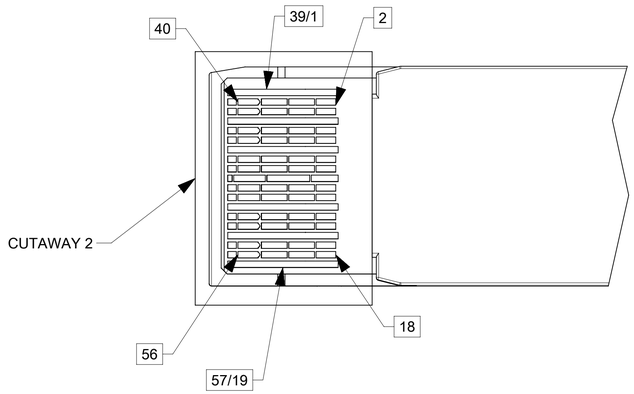

BOTTOM VIEW

zSFP

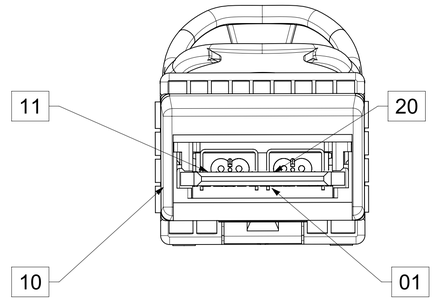

DDQ CABLE BEND RADIUS

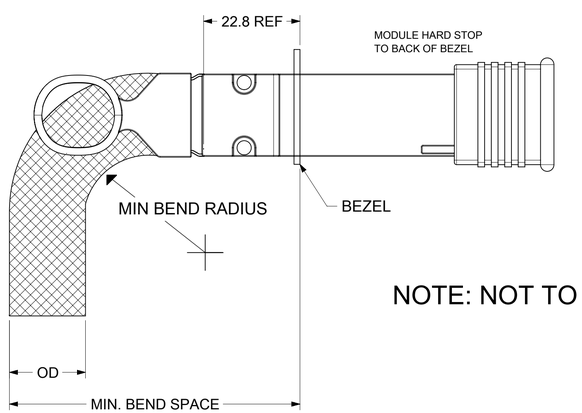

NOTE: NOT TO SCALE

CABLE AWG	OD (mm)	MIN BEND RADIUS (mm)	MIN BEND SPACE (mm)
26	(13)	(65)	(101)
28	(11)	(55)	(89)
30	(9.4)	(45)	(77)

SFP28 CABLE BEND RADIUS

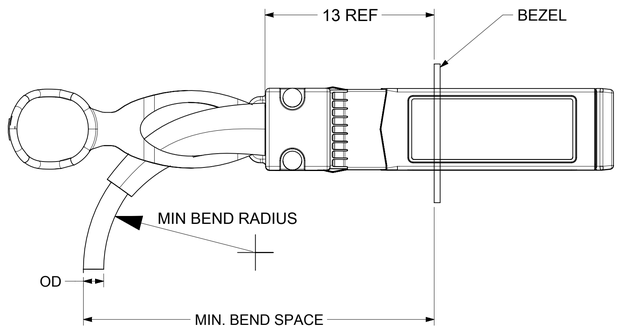

AWG	O.D. (mm)	MIN BEND RADIUS (mm)	MIN BEND SPACE (mm)
26	5.1	(26)	(44)
28	5.2	(26)	(45)
30	4.83	(24)	(42)

FUNCTIONAL SYMBOLS
FA = 0
FC = 0
FP = 0
DIVISIONAL SYMBOLS

THIS DRAWING CONTAINS INFORMATION THAT IS PROPRIETARY TO MOLEX ELECTRONIC TECHNOLOGIES, LLC AND SHOULD NOT BE USED WITHOUT WRITTEN PERMISSION

DIMENSION UNITS: mm
SCALE: 2:1

GENERAL TOLERANCES (UNLESS SPECIFIED)

ANGULAR TOL	± °
4 PLACES	±
3 PLACES	±
2 PLACES	±
1 PLACE	±
0 PLACES	±

DRAFT WHERE APPLICABLE MUST REMAIN WITHIN DIMENSIONS

CURRENT REV DESC: SHT 2: UPDATED DDQ SIDE BEND RADIUS AND BEND SPACE VALUES

EC NO: 690921
DRWN: SKAMATHN 2022/01/05
CHK'D: ADITHK 2022/01/06
APPR: SCHANNARAYAN 2022/01/07

INITIAL REVISION:
DRWN: ZDANDURAND 2017/10/25
APPR: ADTUCKER 2017/10/27

THIRD ANGLE PROJECTION | DRAWING: D-SIZE | SERIES: 205856 | MATERIAL NUMBER: SEE P/N TABLE | CUSTOMER: GENERAL MARKET | SHEET NUMBER: 2 OF 4

molex

QSFP-DD-8ZSFP 56G CABLE ASSEMBLY

PRODUCT CUSTOMER DRAWING

DOCUMENT NUMBER	DOC TYPE	DOC PART	REVISION
2058561005	PSD	000	L4

DOCUMENT STATUS	P1	RELEASE DATE	2022/01/07	04:10:22

WIRING DIAGRAM						
	DDQ END			zSFP END		
PORT	Pad	Signal		Pad	Signal	PORT
1	35	GND	----		GND	2
	36	TX1p	--->	13	RD+	
	37	TX1n	--->	12	RD-	
	16	GND	----		GND	
	17	RX1p	<---	18	TD+	
	18	RX1n	<---	19	TD-	
	1	GND	----		GND	3
	2	TX2n	--->	12	RD-	
	3	TX2p	--->	13	RD+	
	20	GND	----		GND	
	21	RX2n	<---	19	TD-	
	22	RX2p	<---	18	TD+	
	32	GND	----		GND	4
	33	TX3p	--->	13	RD+	
	34	TX3n	--->	12	RD-	
	13	GND	----		GND	
	14	RX3p	<---	18	TD+	
	15	RX3n	<---	19	TD-	
	4	GND	----		GND	5
	5	TX4n	--->	12	RD-	
	6	TX4p	--->	13	RD+	
	23	GND	----		GND	
	24	RX4n	<---	19	TD-	
	25	RX4p	<---	18	TD+	
	7	GND	----		GND	
	19	GND	----		GND	
	26	GND	----		GND	
	38	GND	----		GND	

WIRING DIAGRAM						
	DDQ END			zSFP END		
PORT	Pad	Signal		Pad	Signal	PORT
1	73	GND	----		GND	6
	74	TX5p	--->	13	RD+	
	75	TX5n	--->	12	RD-	
	54	GND	----		GND	
	55	RX5p	<---	18	TD+	
	56	RX5n	<---	19	TD-	
	39	GND	----		GND	7
	40	TX6n	--->	12	RD-	
	41	TX6p	--->	13	RD+	
	58	GND	----		GND	
	59	RX6n	<---	19	TD-	
	60	RX6p	<---	18	TD+	
	70	GND	----		GND	8
	71	TX7p	--->	13	RD+	
	72	TX7n	--->	12	RD-	
	51	GND	----		GND	
	52	RX7p	<---	18	TD+	
	53	RX7n	<---	19	TD-	
	42	GND	----		GND	9
	43	TX8n	--->	12	RD-	
	44	TX8p	--->	13	RD+	
	61	GND	----		GND	
	62	RX8n	<---	19	TD-	
	63	RX8p	<---	18	TD+	
	45	GND	----		GND	
	57	GND	----		GND	
	64	GND	----		GND	
	76	GND	----		GND	

LEGEND:

---- = DRAIN LINES

---> = TRANSMIT TO RECEIVE ON HIGH SPEED CIRCUITS

DOCUMENT STATUS	P1	RELEASE DATE	2022/01/07 04:10:22

THIS DRAWING CONTAINS INFORMATION THAT IS PROPRIETARY TO MOLEX ELECTRONIC TECHNOLOGIES, LLC AND SHOULD NOT BE USED WITHOUT WRITTEN PERMISSION

FUNCTIONAL SYMBOLS: FA = 0, FC = 0, FE = 0

DIVISIONAL SYMBOLS

DIMENSION UNITS	SCALE
mm	1:1

GENERAL TOLERANCES (UNLESS SPECIFIED)

ANGULAR TOL	± °
4 PLACES	±
3 PLACES	±
2 PLACES	±
1 PLACE	±
0 PLACES	±

DRAFT WHERE APPLICABLE MUST REMAIN WITHIN DIMENSIONS

CURRENT REV DESC: SHT 2: UPDATED DDQ SIDE BEND RADIUS AND BEND SPACE VALUES

EC NO: 690921

DRWN:	SKAMATHN	2022/01/05
CHK'D:	ADITHK	2022/01/06
APPR:	SCHANNARAYAN	2022/01/07

INITIAL REVISION:

DRWN:	ZDANDURAND	2017/10/25
APPR:	ADTUCKER	2017/10/27

molex

QSFP-DD-8ZSFP 56G CABLE ASSEMBLY

PRODUCT CUSTOMER DRAWING

DOCUMENT NUMBER	DOC TYPE	DOC PART	REVISION
2058561005	PSD	000	L4

THIRD ANGLE PROJECTION	DRAWING	SERIES	MATERIAL NUMBER	CUSTOMER	SHEET NUMBER
	D-SIZE	205856	SEE P/N TABLE	GENERAL MARKET	3 OF 4

LEG ID LABEL

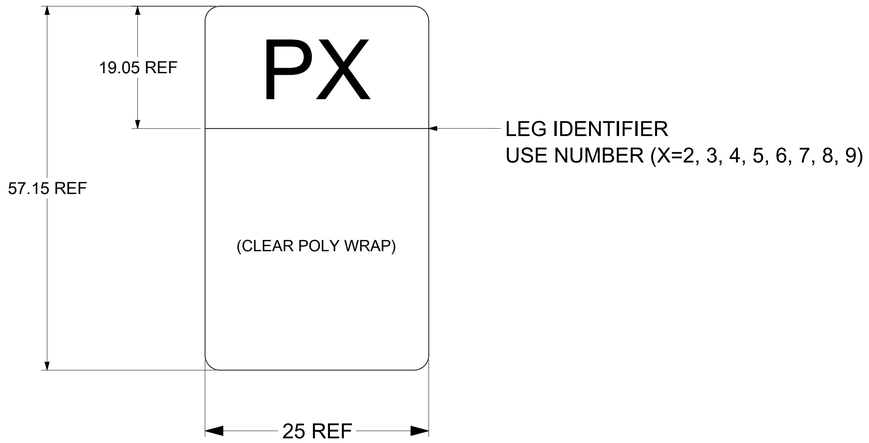

SPEED LABEL

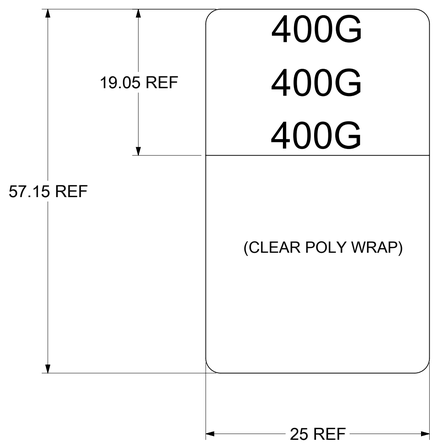

LABEL DETAILS

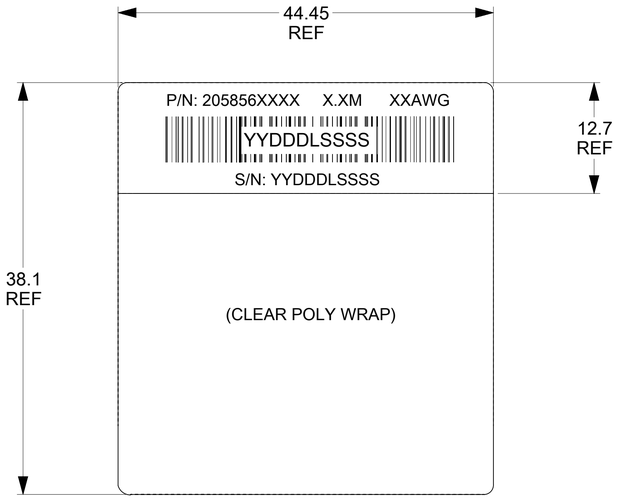

P/N: 205856XXXX - MOLEX PART NUMBER (SEE P/N TABLE)

X.XM - CABLE LENGTH IN METERS (EXAMPLES - 0.5M, 1.0M)
XXAWG - CABLE SIZE IN AWG (SEE P/N TABLE)
S/N: YYDDDLSSSS - SERIAL NUMBER
YY - YEAR, THE LAST 2 DIGITS OF YEAR
DDD - DAY OF THE YEAR
L - LOCATION
1 - USA
2 - MEXICO
3 - CHINA
4 - PHILIPPINES
SSSS - SERIAL NUMBER (0001-9999)

DOCUMENT STATUS	P1	RELEASE DATE	2022/01/07 04:10:22																		

THIS DRAWING CONTAINS INFORMATION THAT IS PROPRIETARY TO MOLEX ELECTRONIC TECHNOLOGIES, LLC AND SHOULD NOT BE USED WITHOUT WRITTEN PERMISSION

FUNCTIONAL SYMBOLS: EA = 0; EC = 0; EP = 0
DIVISIONAL SYMBOLS

DIMENSION UNITS	SCALE
mm	1:1

GENERAL TOLERANCES (UNLESS SPECIFIED)

ANGULAR TOL	± °
4 PLACES	±
3 PLACES	±
2 PLACES	±
1 PLACE	±
0 PLACES	±

DRAFT WHERE APPLICABLE MUST REMAIN WITHIN DIMENSIONS

CURRENT REV DESC: SHT 2: UPDATED DDQ SIDE BEND RADIUS AND BEND SPACE VALUES

EC NO: 690921
DRWN: SKAMATHN 2022/01/05
CHK'D: ADITHK 2022/01/06
APPR: SCHANNARAYAN 2022/01/07

INITIAL REVISION:
DRWN: ZDANDURAND 2017/10/25
APPR: ADTUCKER 2017/10/27

molex

QSFP-DD-8ZSFP 56G CABLE ASSEMBLY

PRODUCT CUSTOMER DRAWING

DOCUMENT NUMBER	DOC TYPE	DOC PART	REVISION
2058561005	PSD	000	L4

THIRD ANGLE PROJECTION	DRAWING	SERIES	MATERIAL NUMBER	CUSTOMER	SHEET NUMBER
	D-SIZE	205856	SEE P/N TABLE	GENERAL MARKET	4 OF 4