TABLE OF CONTENTS

SHEET NO.	SHEET DESCRIPTION
1	NOTES AND BOM
2	CONFIGURATIONS
3-4	KEY CONFIGURATIONS
5	BLADE SEALED ASSEMBLY
6	SYSTEM PACKAGING
7	BACKSHELL NOTES
8	BACKSHELL
9	BACKSHELL CONFIGURATIONS

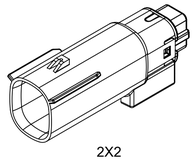

2X2

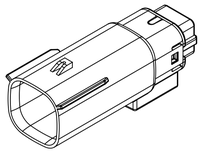

2X3

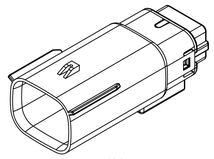

2X4

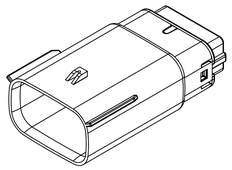

2X6

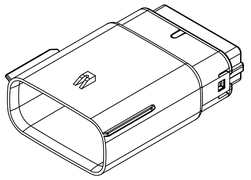

2X8

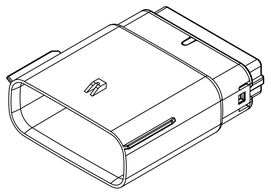

2X10

NOTES: VALID UNLESS OTHERWISE SPECIFIED

1. GENERAL:
a. APPLICATION SPECIFICATION SEE: AS-33472-100
-CONTAINS: PRODUCT INTRODUCTION, PRODUCT SUMMARY, CONNECTOR ASSEMBLY, PACKAGING INFORMATION, CONNECTOR MATING, SERVICE INSTRUCTIONS, ELECTRICAL CONTINUITY CHECKING, CRIMPING, AND TROUBLESHOOTING.
-DESIGNED TO MATE WITH RECEPTACLE SEALED ASSEMBLY AS SPECIFIED IN THE MATING CONNECTOR DRAWINGS CHART.
*DENOTES DRAWINGS THAT CAN BE ACCESSED AT <http://ewcap.uscarteams.org/>.
-ASSEMBLY SHIPPED WITH PLR IN PRE-LOCK POSITION (SEE PLR PRE-LOCK VIEW SHEET 5).

b. PRODUCT SPECIFICATION SEE:
-STANDARD CONFIGURATION: PS-33472-000
-UL V0 CONFIGURATION: TBD
CONTAINS: PRODUCT INTRODUCTION, PRODUCT SUMMARY, RATINGS (CURRENT, TEMPERATURE, SEALING, AND FLAMMABILITY), TERMINALS, WIRE DIAMETER RANGE, PRODUCT VALIDATION, AND PRODUCT DEVIATIONS.
c. PACKAGING SPECIFICATION PER MOLEX DRAWING: PK-31300-635
d. PARTS MUST BE IN COMPLIANCE TO MOLEX CHEMICAL SUBSTANCES FOR PRODUCTS AND PACKAGING SPECIFICATION: QEHS-699000-300
e. DATA MUST BE SUBMITTED UNDER THE MOLEX PART NUMBER TO IMDS (COMPANY ID#13255)

2. DESIGN - MATERIALS:
a. FOR BILL OF MATERIALS SEE:
-STANDARD CONFIGURATION: SD-33482-0002
-UL V0 CONFIGURATION: SD-160084-0002

3. DESIGN - GEOMETRY:
a. THE 3-D CAD DATA IS BASIC (WITHOUT TOLERANCE) AND MASTER FOR THIS PART WITH THE EXCEPTION OF UNDERLINED DIMENSIONS. DIMENSIONAL INFORMATION NOT SHOWN ON THIS DRAWING IS DEFINED BY THE DATA FILE AT ITS LATEST REVISION.
b. GEOMETRIC DIMENSIONS AND TOLERANCES PER ASME Y14.5M-2009
c. EDGES AND UNDIMENSIONED DETAILS PER ISO13715
d. CORNERS SHOWN AS SHARP TO BE R 0.2 MAX.
e. LETTERING SHALL BE 0.15 MAX RAISED IN 0.25 MAX RECESS PAD. THIS INCLUDES RECYCLING CODE, CAVITY ID, VENDOR IDENTIFICATION, AND CUSTOMER MATERIAL NUMBER.
f. VISUAL DEFECTS SHALL MEET COSMETIC STANDARD PS-45499-002 (Class B).
g. LASER MARKING:
1. PART NUMBER
2. DAY OF THE YEAR
3. SHIFT
4. YEAR
FOR ADDITIONAL INFORMATION SEE SECTION 5 UNDER PROCEDURES IN ES-34735-008.

MATING CONNECTOR DRAWINGS

DESCRIPTION	MOLEX INLINE
2X2	SD-33472-0001
2X3	SD-33472-0001
2X4	SD-33472-0001
2X6	SD-33472-0001
2X8	SD-33472-0001
2X10	SD-33472-0001

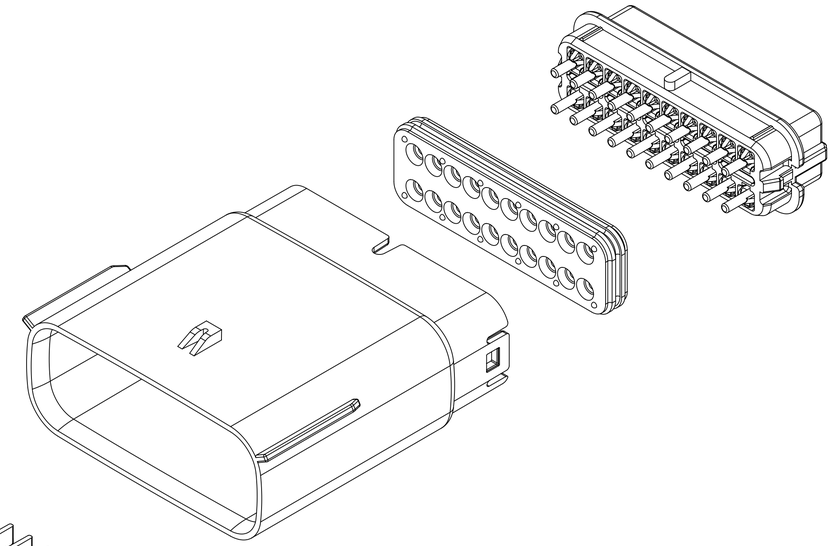

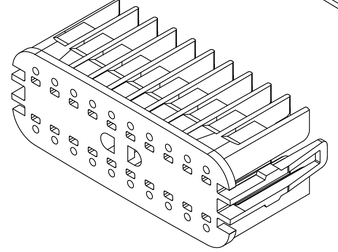

REV	REV DESCRIPTION
E2	ADDED MOLEX BACKSHELL DETAILS
E1	MIGRATED FROM COCREATE AND IMPORTED DXF FILES
E	ADDED CHARTED DIMENSIONS FOR 2X2, 2X4, 2X6 AND 2X8 WITH CLIPSLOT
D	MINOR GEOMETRY CHANGE FOR UL V0
C3	ADD 2X4
C2	ADD 2X3
C1	ADD UL V0 CONFIGURATIONS
C	ADD 2X8
B1	ADD 2X6 BACKSHELL INFO
B	ADD 2X6
A	INITIAL RELEASE

INSPECTION NUMBER LOG
LAST NUMBER: 9
ADDED:
REMOVED:

THIS DRAWING CONTAINS INFORMATION THAT IS PROPRIETARY TO MOLEX ELECTRONIC TECHNOLOGIES, LLC AND SHOULD NOT BE USED WITHOUT WRITTEN PERMISSION

SYMBOLS
A = 0
C = 0
F = 0
S = 0
= 0
= 0
= 0
= 0
= 0

DIMENSION UNITS: mm
SCALE: 1.5:1

GENERAL TOLERANCES (UNLESS SPECIFIED)

ANGULAR TOL	± 1.0 °
4 PLACES	±
3 PLACES	±
2 PLACES	± 0.1
1 PLACE	± 0.2
0 PLACES	±

DRAFT WHERE APPLICABLE MUST REMAIN WITHIN DIMENSIONS

CURRENT REV DESC:

EC NO: 171650
DRWN: PMANJUNATHAC 2018/01/03
CHK'D: MVANSLAMBROU 2018/02/16
APPR: MVANSLAMBROU 2018/02/16

INITIAL REVISION:
DRWN: APROFFITT 2014/04/28
APPR: VKOSHY 2014/05/14

THIRD ANGLE PROJECTION
DRAWING: A1-SIZE
SERIES: 33482

molex

MX150 BLADE
DUAL ROW SEALED ASSEMBLY MAT SEAL

PRODUCT CUSTOMER DRAWING

DOCUMENT NUMBER	DOC TYPE	DOC PART	REVISION
SD-33482-0001	PSD	001	E2

MATERIAL NUMBER	CUSTOMER	SHEET NUMBER
	GENERAL MARKET	1 OF 11

DOCUMENT STATUS	P1	RELEASE DATE	2018/02/16 22:02:26

SHEET DESCRIPTION
CONFIGURATIONS

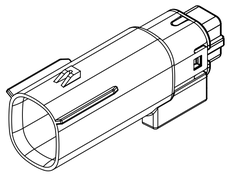

2X2 - STANDARD (STD)

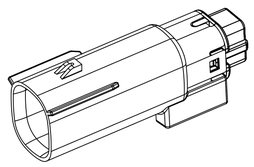

2X2 - UL V0*

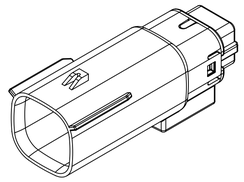

2X3 - STANDARD (STD)

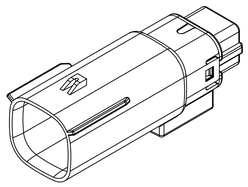

2X3 - LENGTHENED

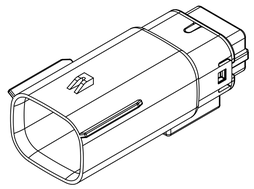

2X4 - STANDARD (STD)

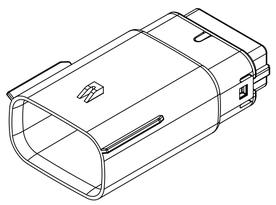

2X6 - STANDARD (STD)

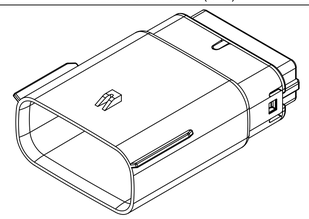

2X8 - STANDARD (STD)

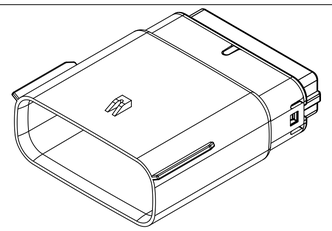

2X10 - STANDARD (STD)

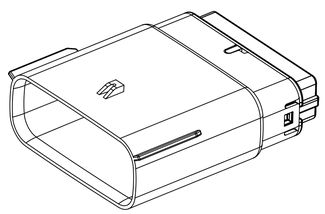

2X10 - UL V0*

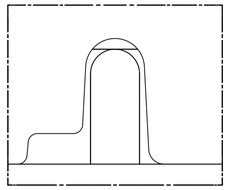

UL V0 UNIQUE FEATURE
Partial1
SCALE 10:1

* MINOR GEOMETRY CHANGE THAN STANDARD CONFIGURATION.
SEE NOTE 2a FOR MORE INFORMATION

DOCUMENT STATUS	P1	RELEASE DATE	2018/02/16 22:02:26

SYMBOLS	
A	= 0
B	= 0
C	= 0
D	= 0
E	= 0
F	= 0
G	= 0
H	= 0

DIMENSION UNITS	SCALE
mm	1.5:1

GENERAL TOLERANCES (UNLESS SPECIFIED)	
ANGULAR TOL	± 1.0 °
4 PLACES	±
3 PLACES	±
2 PLACES	± 0.1
1 PLACE	± 0.2
0 PLACES	±

DRAFT WHERE APPLICABLE MUST REMAIN WITHIN DIMENSIONS

THIS DRAWING CONTAINS INFORMATION THAT IS PROPRIETARY TO MOLEX ELECTRONIC TECHNOLOGIES, LLC AND SHOULD NOT BE USED WITHOUT WRITTEN PERMISSION

CURRENT REV DESC:

EC NO: 171650
DRWN: PMANJUNATHAC 2018/01/03
CHK'D: MVANSLAMBROU 2018/02/16
APPR: MVANSLAMBROU 2018/02/16

INITIAL REVISION:
DRWN: APROFFITT 2014/04/28
APPR: VKOSHY 2014/05/14

THIRD ANGLE PROJECTION | DRAWING: A1-SIZE | SERIES: 33482

molex

MX150 BLADE
DUAL ROW SEALED ASSEMBLY MAT SEAL

PRODUCT CUSTOMER DRAWING

DOCUMENT NUMBER	DOC TYPE	DOC PART	REVISION
SD-33482-0001	PSD	001	E2

MATERIAL NUMBER	CUSTOMER	SHEET NUMBER
	GENERAL MARKET	2 OF 11

SHEET DESCRIPTION
KEY CONFIGURATIONS

2X2

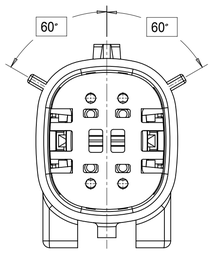

KEY A

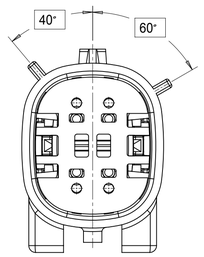

KEY B

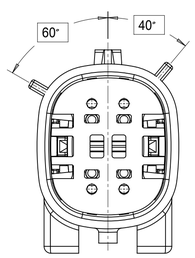

KEY C

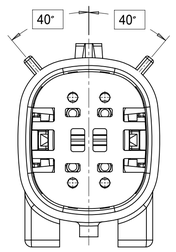

KEY D

2X3

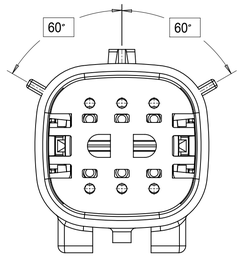

KEY A

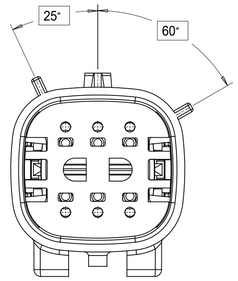

KEY B

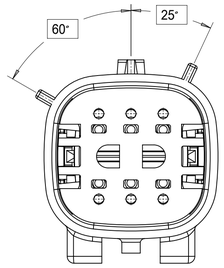

KEY C

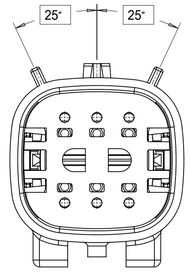

KEY D

2X4

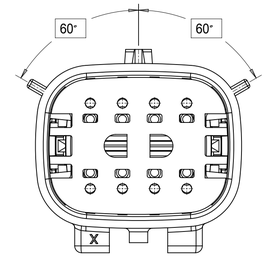

KEY A

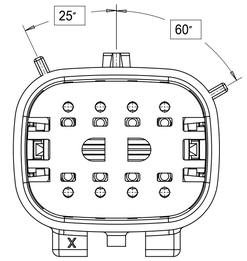

KEY B

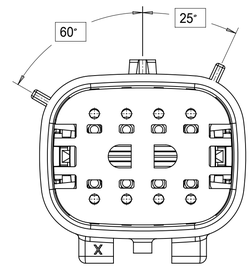

KEY C

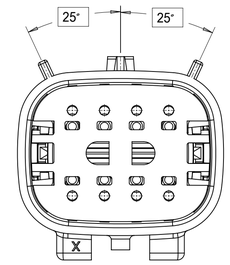

KEY D

SYMBOLS	
FA	= 0
FC	= 0
FP	= 0
S	= 0
▼	= 0
C	= 0
☒	= 0
■	= 0
V	= 0

THIS DRAWING CONTAINS INFORMATION THAT IS PROPRIETARY TO MOLEX ELECTRONIC TECHNOLOGIES, LLC AND SHOULD NOT BE USED WITHOUT WRITTEN PERMISSION

DIMENSION UNITS	SCALE
mm	3:1

GENERAL TOLERANCES (UNLESS SPECIFIED)

ANGULAR TOL	±	1.0 °
4 PLACES	±	
3 PLACES	±	
2 PLACES	±	0.1
1 PLACE	±	0.2
0 PLACES	±	

DRAFT WHERE APPLICABLE MUST REMAIN WITHIN DIMENSIONS

CURRENT REV DESC:

EC NO: 171650
DRWN: PMANJUNATHAC 2018/01/03
CHK'D: MVANSLAMBROU 2018/02/16
APPR: MVANSLAMBROU 2018/02/16

INITIAL REVISION:
DRWN: APROFFITT 2014/04/28
APPR: VKOSHY 2014/05/14

THIRD ANGLE PROJECTION | DRAWING: A1-SIZE | SERIES: 33482

molex

MX150 BLADE
DUAL ROW SEALED ASSEMBLY MAT SEAL

PRODUCT CUSTOMER DRAWING

DOCUMENT NUMBER	DOC TYPE	DOC PART	REVISION
SD-33482-0001	PSD	001	E2

MATERIAL NUMBER	CUSTOMER	SHEET NUMBER
	GENERAL MARKET	3 OF 11

DOCUMENT STATUS	P1	RELEASE DATE	2018/02/16 22:02:26

SHEET DESCRIPTION
KEY CONFIGURATIONS CONT.

2X6

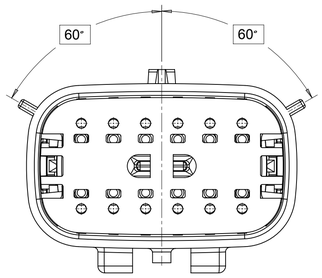

KEY A

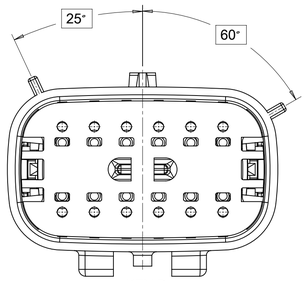

KEY B

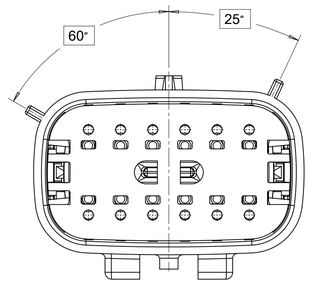

KEY C

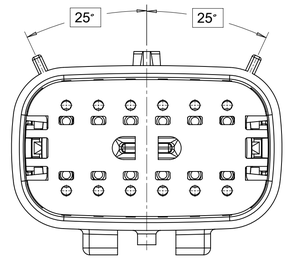

KEY D

2X8

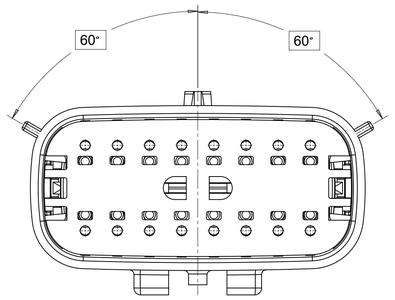

KEY A

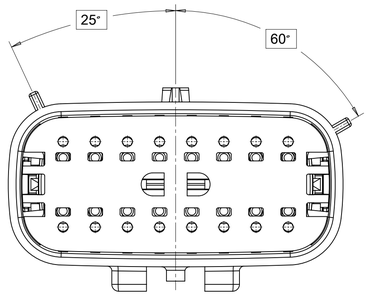

KEY B

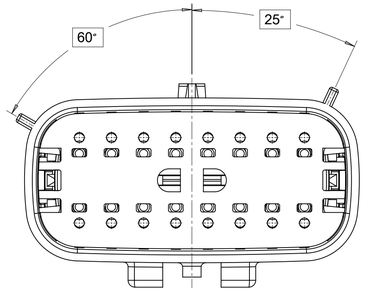

KEY C

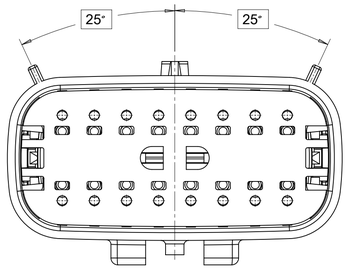

KEY D

2X10

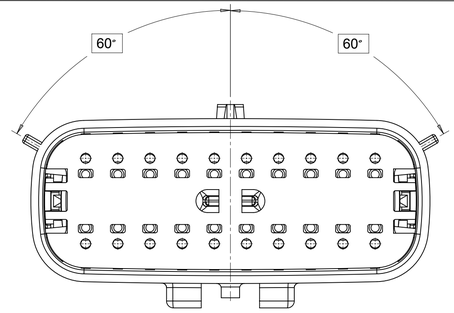

KEY A

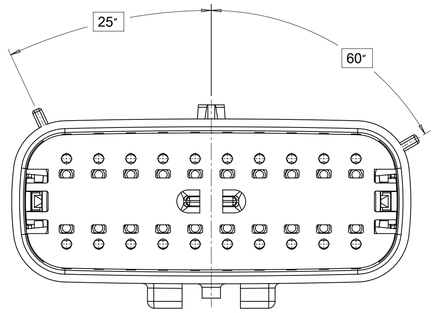

KEY B

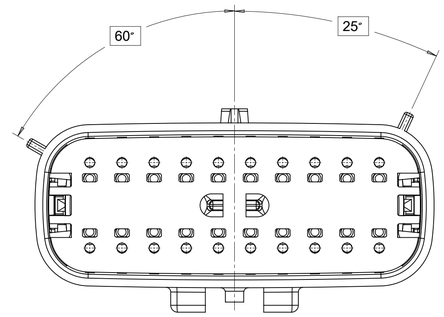

KEY C

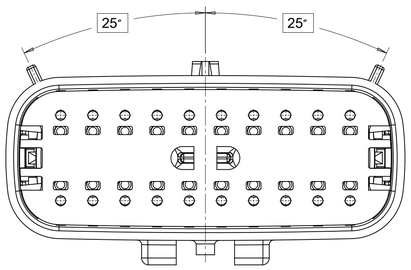

KEY D

SYMBOLS
F/A = 0
F/C = 0
F/P = 0
S = 0
= 0
C = 0
= 0
= 0
= 0

THIS DRAWING CONTAINS INFORMATION THAT IS PROPRIETARY TO MOLEX ELECTRONIC TECHNOLOGIES, LLC AND SHOULD NOT BE USED WITHOUT WRITTEN PERMISSION

DIMENSION UNITS	SCALE
mm	3:1

GENERAL TOLERANCES (UNLESS SPECIFIED)

ANGULAR TOL	±	1.0 °
4 PLACES	±	
3 PLACES	±	
2 PLACES	±	0.1
1 PLACE	±	0.2
0 PLACES	±	

DRAFT WHERE APPLICABLE MUST REMAIN WITHIN DIMENSIONS

CURRENT REV DESC:

EC NO: 171650
DRWN: PMANJUNATHAC 2018/01/03
CHK'D: MVANSLAMBROU 2018/02/16
APPR: MVANSLAMBROU 2018/02/16

INITIAL REVISION:
DRWN: APROFFITT 2014/04/28
APPR: VKOSHY 2014/05/14

THIRD ANGLE PROJECTION | DRAWING: A1-SIZE | SERIES: 33482

molex

MX150 BLADE
DUAL ROW SEALED ASSEMBLY MAT SEAL

PRODUCT CUSTOMER DRAWING

DOCUMENT NUMBER	DOC TYPE	DOC PART	REVISION
SD-33482-0001	PSD	001	E2

MATERIAL NUMBER	CUSTOMER	SHEET NUMBER
	GENERAL MARKET	4 OF 11

DOCUMENT STATUS	P1	RELEASE DATE	2018/02/16 22:02:26

SHEET DESCRIPTION
BLADE SEALED ASSEMBLY

CHARTED DIMENSION						
DESCRIPTION	DIMENSIONS					
	A	B	C	D	E
2X2	15.54	1.75	24.40	54.45	22.23
2X3 STANDARD	19.04	3.50	26.21	54.45	22.23
2X3 LENGTHENED	19.04	3.50	26.21	56.45	22.23
2X4	22.54	1.75	27.21	54.45	22.23
2X6	29.54	1.75	32.27	54.45	22.23
2X8	36.54	1.75	38.88	54.45	22.23
2X10	43.64	1.75	45.65	54.45	22.05

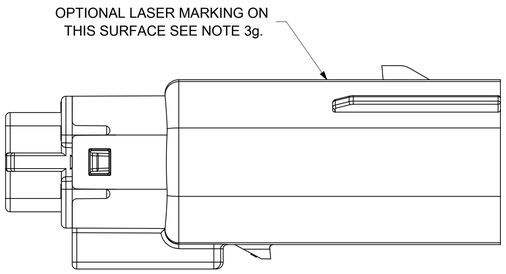

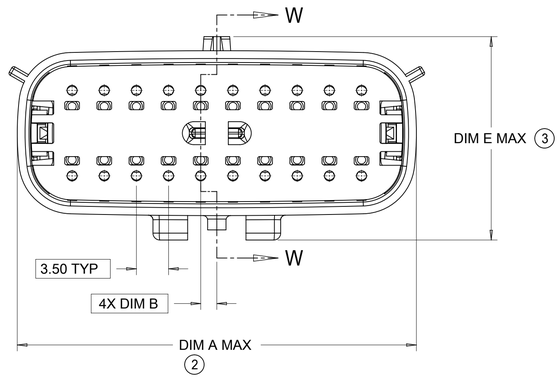

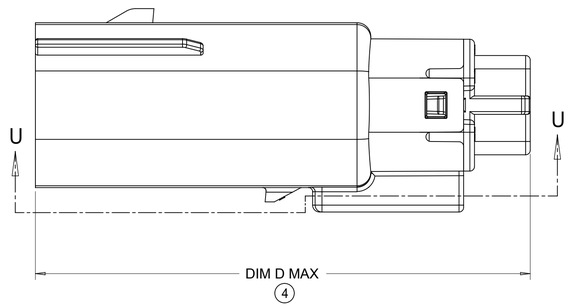

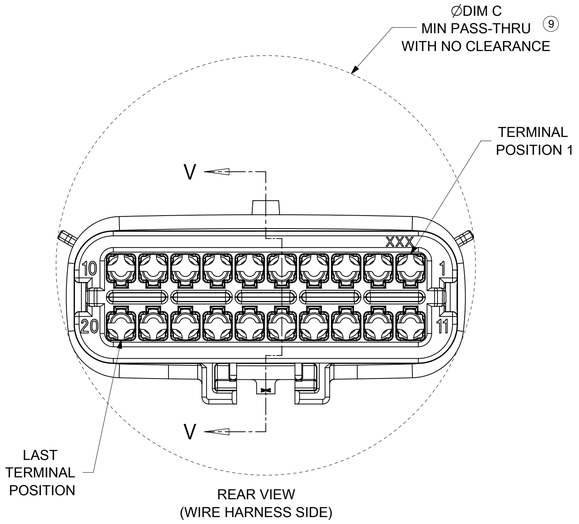

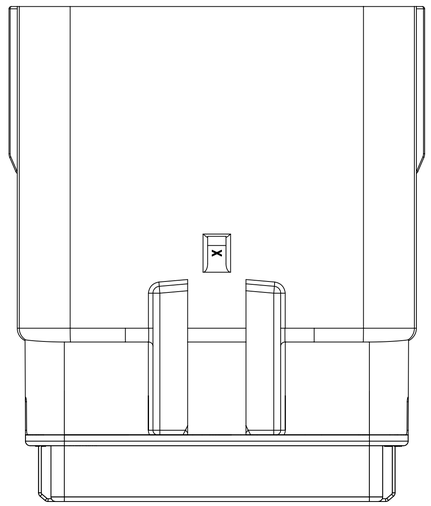

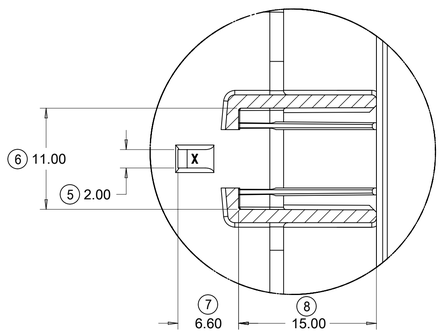

PartialU-U
SCALE 3:1

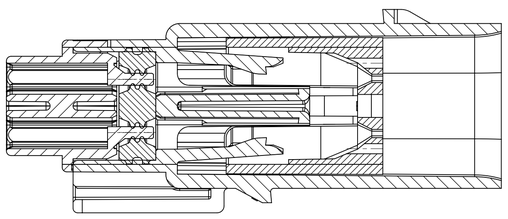

PRIMARY LOCK REINFORCEMENT (PLR) SHOWN
IN PRE-STAGED POSITION

SECTION W-W

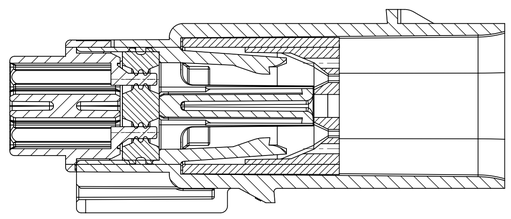

PRIMARY LOCK REINFORCEMENT (PLR) SHOWN
IN FINAL-LOCK POSITION

SECTION V-V

SYMBOLS	
A = 0	
E = 0	
F = 0	
S = 0	
= 0	
C = 0	
= 0	
= 0	
= 0	

THIS DRAWING CONTAINS INFORMATION THAT IS PROPRIETARY TO MOLEX ELECTRONIC TECHNOLOGIES, LLC AND SHOULD NOT BE USED WITHOUT WRITTEN PERMISSION

DIMENSION UNITS	SCALE
mm	3:1

GENERAL TOLERANCES (UNLESS SPECIFIED)		
ANGULAR TOL	±	1.0 °
4 PLACES	±	
3 PLACES	±	
2 PLACES	±	0.1
1 PLACE	±	0.2
0 PLACES	±	

DRAFT WHERE APPLICABLE MUST REMAIN WITHIN DIMENSIONS

CURRENT REV DESC:

EC NO: 171650
DRWN: PMANJUNATHAC 2018/01/03
CHK'D: MVANSLAMBROU 2018/02/16
APPR: MVANSLAMBROU 2018/02/16

INITIAL REVISION:
DRWN: APROFFITT 2014/04/28
APPR: VKOSHY 2014/05/14

THIRD ANGLE PROJECTION | DRAWING: A1-SIZE | SERIES: 33482

molex

MX150 BLADE
DUAL ROW SEALED ASSEMBLY MAT SEAL

PRODUCT CUSTOMER DRAWING

DOCUMENT NUMBER	DOC TYPE	DOC PART	REVISION
SD-33482-0001	PSD	001	E2

MATERIAL NUMBER	CUSTOMER	SHEET NUMBER
	GENERAL MARKET	5 OF 11

DOCUMENT STATUS	P1	RELEASE DATE	2018/02/16 22:02:26

SHEET DESCRIPTION
SYSTEM PACKAGING

CHARTED DIMENSION				
CKT	BLADE CONFIGURATION	RECEPTACLE CONFIGURATION	DIMENSIONS	
			K	L
2X2	STANDARD	W/O CLIPSLOT	72.78	28.00
		W/ CLIPSLOT	72.78	28.50
		LENGTHENED	77.21	28.00
2X3	STANDARD	W/O CLIPSLOT	72.78	28.00
		W/ CLIPSLOT		30.50
	LENGTHENED	W/O CLIPSLOT	74.79	28.00
		W/ CLIPSLOT		30.50
2X4	STANDARD	W/O CLIPSLOT	72.78	29.50
		W/ CLIPSLOT		31.50
2X6	STANDARD	W/O CLIPSLOT	72.79	35.58
		W/ CLIPSLOT		
2X8	STANDARD	W/O CLIPSLOT	72.67	42.25
		W/ CLIPSLOT		
2X10	STANDARD	STANDARD	72.78	49.05

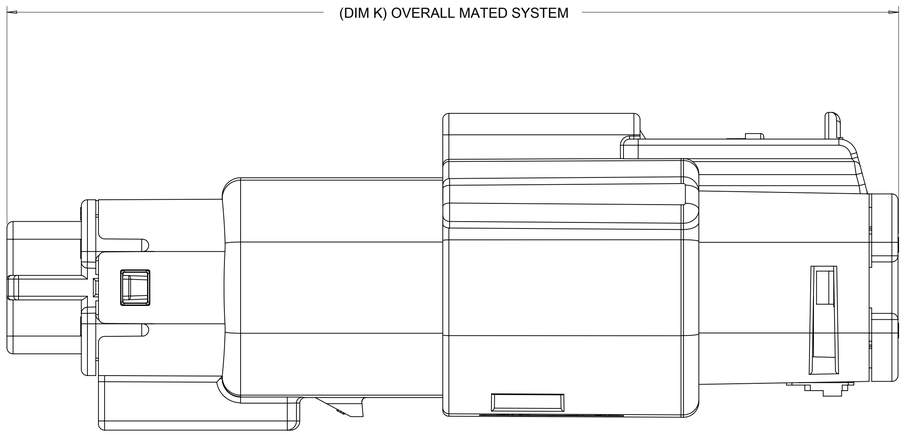

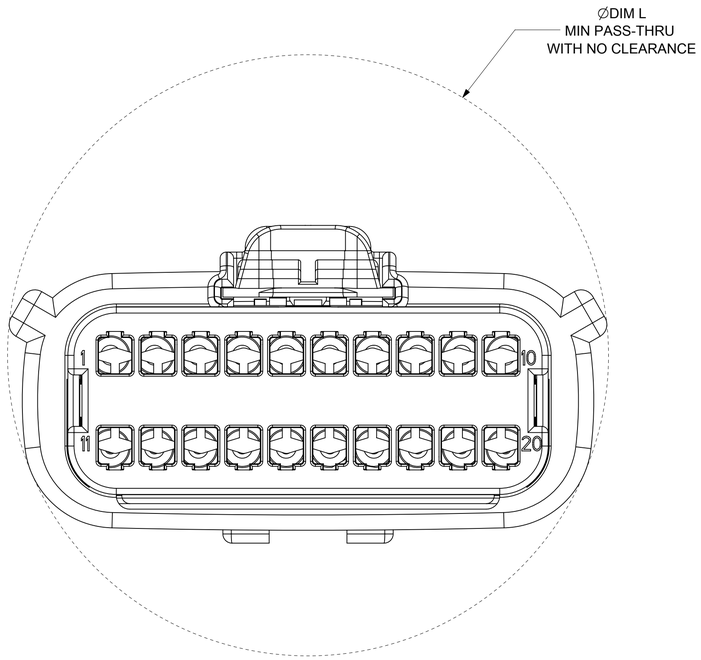

DOCUMENT STATUS	P1	RELEASE DATE	2018/02/16 22:02:26

SYMBOLS	
A = 0	
C = 0	
D = 0	
E = 0	
F = 0	
G = 0	
H = 0	
J = 0	

THIS DRAWING CONTAINS INFORMATION THAT IS PROPRIETARY TO MOLEX ELECTRONIC TECHNOLOGIES, LLC AND SHOULD NOT BE USED WITHOUT WRITTEN PERMISSION

DIMENSION UNITS	SCALE
mm	4:1

GENERAL TOLERANCES (UNLESS SPECIFIED)	
ANGULAR TOL	± 1.0 °
4 PLACES	±
3 PLACES	±
2 PLACES	± 0.1
1 PLACE	± 0.2
0 PLACES	±

DRAFT WHERE APPLICABLE MUST REMAIN WITHIN DIMENSIONS

CURRENT REV DESC:

EC NO: 171650
DRWN: PMANJUNATHAC 2018/01/03
CHK'D: MVANSLAMBROU 2018/02/16
APPR: MVANSLAMBROU 2018/02/16

INITIAL REVISION:
DRWN: APROFFITT 2014/04/28
APPR: VKOSHY 2014/05/14

molex

MX150 BLADE
DUAL ROW SEALED ASSEMBLY MAT SEAL

PRODUCT CUSTOMER DRAWING

DOCUMENT NUMBER	DOC TYPE	DOC PART	REVISION
SD-33482-0001	PSD	001	E2

THIRD ANGLE PROJECTION	DRAWING	SERIES	MATERIAL NUMBER	CUSTOMER	SHEET NUMBER
	A1-SIZE	33482		GENERAL MARKET	6 OF 11

SHEET DESCRIPTION
BACKSHELL NOTES

BACKSHELL NOTES: VALID UNLESS OTHERWISE SPECIFIED

1. GENERAL:
a. APPLICATION SPECIFICATION SEE: AS-34951-001
-DESIGNED TO MATE WITH BLADE SEALED ASSEMBLY SPECIFIED IN MOLEX DRAWING SD-33482-0001.
-SYSTEM TO BE USED WITH WIRE WITHIN DIAMETER RANGE OF 1.2mm TO 2.69mm.
-COMPONENTS ARE OPTIONAL AND MUST BE PURCHASED SEPERATELY.
-DESIGN IS OWNED BY SCHLEMMER FOR SCHLEMMER BACKSHELL.
-DESIGN IS OWNED BY MOLEX FOR MOLEX BACKSHELL.
-90° ADAPTOR DESIGN IS OWNED BY MOLEX.
-FOR ADDITIONAL INFORMATION SEE THE BACKSHELL COMPONENT DRAWING SD-34950-0001.

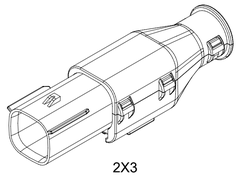

2X3

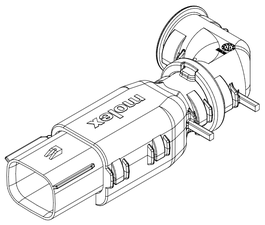

2X4

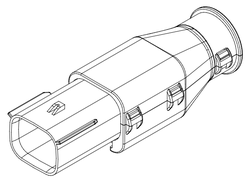

2X4

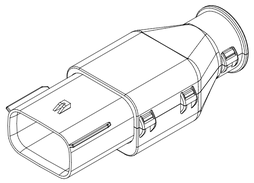

2X6

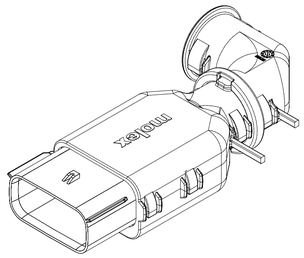

2X8

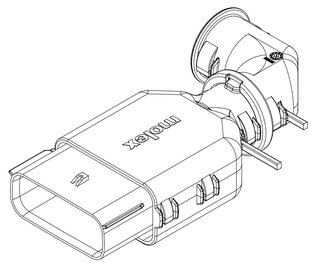

2X10

BACKSHELL CUSTOMER
MODEL NUMBER LEGEND

34950-XXXX

CUSTOMER MODEL COMPONENTS
- 0 - SCHLEMMER BACKSHELL ONLY
- 1 - SCHLEMMER BACKSHELL & MX150 HOUSING KEY A ASSEMBLY
- 2 - SCHLEMMER BACKSHELL & MX150 HOUSING KEY B ASSEMBLY
- 3 - SCHLEMMER BACKSHELL & MX150 HOUSING KEY C ASSEMBLY
- 4 - SCHLEMMER BACKSHELL & MX150 HOUSING KEY D ASSEMBLY
- 5 - MOLEX BACKSHELL ONLY
- 6 - MOLEX BACKSHELL & MX150 HOUSING KEY A ASSEMBLY
- 7 - MOLEX BACKSHELL & MX150 HOUSING KEY B ASSEMBLY
- 8 - MOLEX BACKSHELL & MX150 HOUSING KEY C ASSEMBLY
- 9 - MOLEX BACKSHELL & MX150 HOUSING KEY D ASSEMBLY

BACKSHELL FEATURES
- 1 - WITH RIBS
- 2 - WITHOUT RIBS
- 3 - 90° ADAPTOR

MX150 CIRCUIT SIZE 04, 06, 08, 12, 16, 20

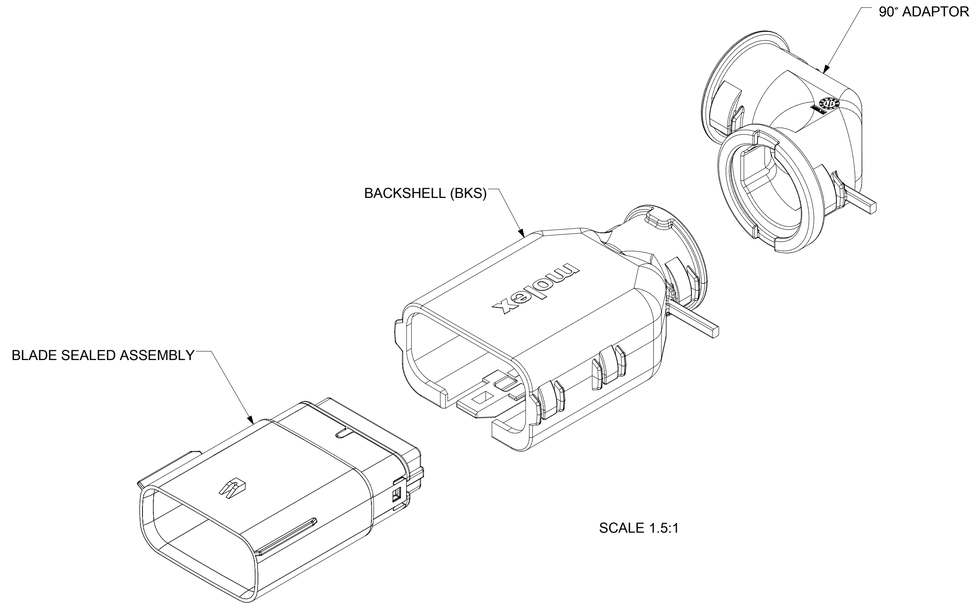

SCALE 1.5:1

SYMBOLS	DIMENSION UNITS	SCALE
A = 0	mm	1.5:1
C = 0	GENERAL TOLERANCES (UNLESS SPECIFIED)	
F = 0	ANGULAR TOL	± 1.0 °
S = 0	4 PLACES	±
= 0	3 PLACES	±
C = 0	2 PLACES	± 0.1
= 0	1 PLACE	± 0.2
= 0	0 PLACES	±
V = 0	DRAFT WHERE APPLICABLE MUST REMAIN WITHIN DIMENSIONS	

THIS DRAWING CONTAINS INFORMATION THAT IS PROPRIETARY TO MOLEX ELECTRONIC TECHNOLOGIES, LLC AND SHOULD NOT BE USED WITHOUT WRITTEN PERMISSION

CURRENT REV DESC:

EC NO: 171650
DRWN: PMANJUNATHAC 2018/01/03
CHK'D: MVANSLAMBROU 2018/02/16
APPR: MVANSLAMBROU 2018/02/16

INITIAL REVISION:
DRWN: APROFFITT 2014/04/28
APPR: VKOSHY 2014/05/14

THIRD ANGLE PROJECTION | DRAWING: A1-SIZE | SERIES: 33482

molex

MX150 BLADE
DUAL ROW SEALED ASSEMBLY MAT SEAL

PRODUCT CUSTOMER DRAWING

DOCUMENT NUMBER	DOC TYPE	DOC PART	REVISION
SD-33482-0001	PSD	001	E2

MATERIAL NUMBER	CUSTOMER	SHEET NUMBER
	GENERAL MARKET	7 OF 11

DOCUMENT STATUS	P1	RELEASE DATE	2018/02/16 22:02:26

SHEET DESCRIPTION
SCHLEMMER BACKSHELL

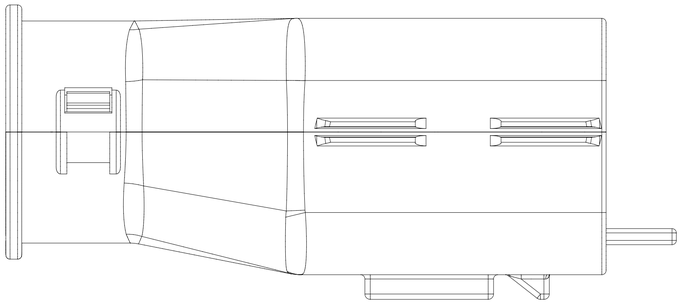

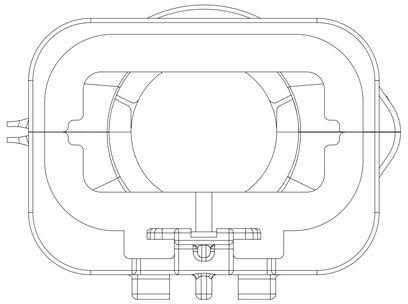

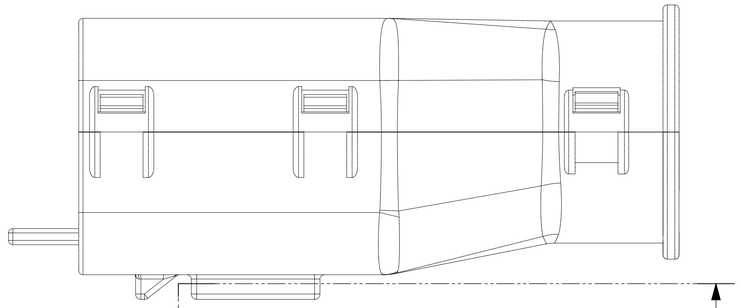

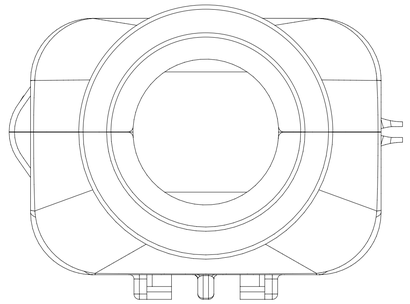

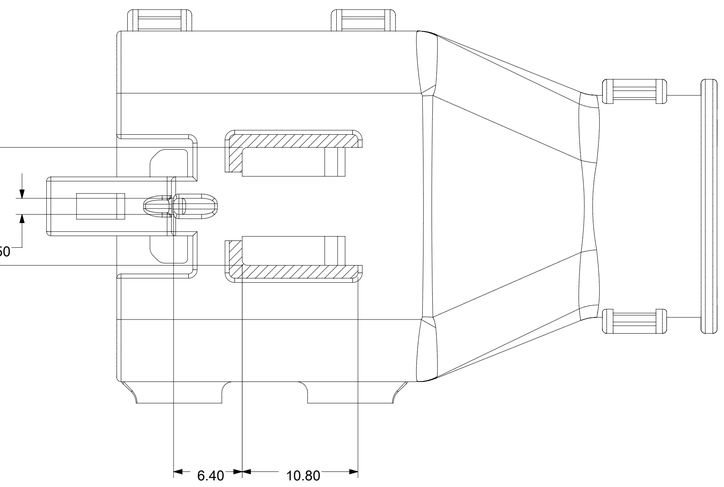

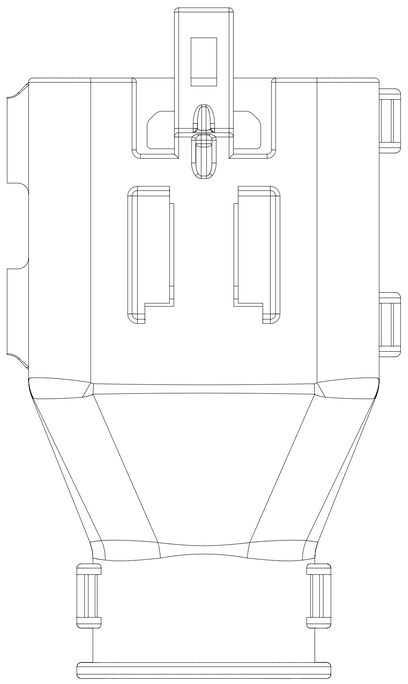

SECTION A-A

DOCUMENT STATUS	P1	RELEASE DATE	2018/02/16 22:02:26

SYMBOLS	
A = 0	
C = 0	
E = 0	
S = 0	
= 0	
C = 0	
= 0	
= 0	
= 0	

THIS DRAWING CONTAINS INFORMATION THAT IS PROPRIETARY TO MOLEX ELECTRONIC TECHNOLOGIES, LLC AND SHOULD NOT BE USED WITHOUT WRITTEN PERMISSION

DIMENSION UNITS	SCALE
mm	3.5:1

GENERAL TOLERANCES (UNLESS SPECIFIED)		
ANGULAR TOL	±	1.0 °
4 PLACES	±	
3 PLACES	±	
2 PLACES	±	0.1
1 PLACE	±	0.2
0 PLACES	±	

DRAFT WHERE APPLICABLE MUST REMAIN WITHIN DIMENSIONS

CURRENT REV DESC:

EC NO: 171650

DRWN:	PMANJUNATHAC	2018/01/03
CHK'D:	MVANSLAMBROU	2018/02/16
APPR:	MVANSLAMBROU	2018/02/16

INITIAL REVISION:

DRWN:	APROFFITT	2014/04/28
APPR:	VKOSHY	2014/05/14

molex

MX150 BLADE
DUAL ROW SEALED ASSEMBLY MAT SEAL

PRODUCT CUSTOMER DRAWING

DOCUMENT NUMBER	DOC TYPE	DOC PART	REVISION
SD-33482-0001	PSD	001	E2

THIRD ANGLE PROJECTION	DRAWING	SERIES
	A1-SIZE	33482

MATERIAL NUMBER	CUSTOMER	SHEET NUMBER
	GENERAL MARKET	8 OF 11

SHEET DESCRIPTION
MOLEX BACKSHELL

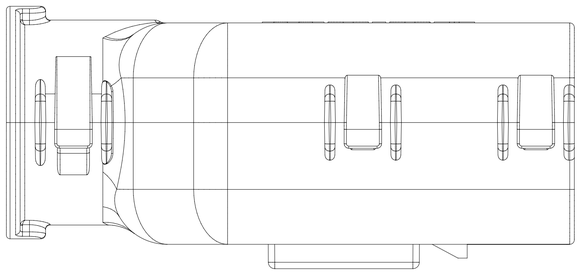

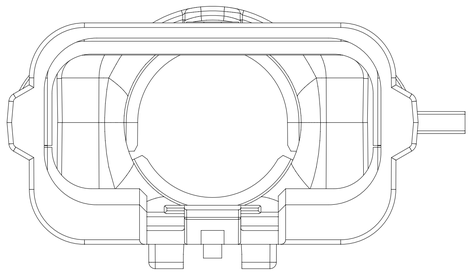

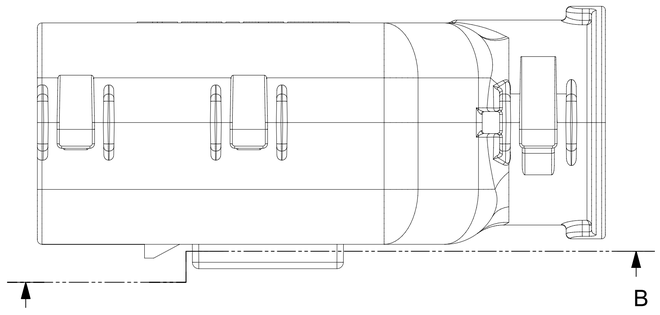

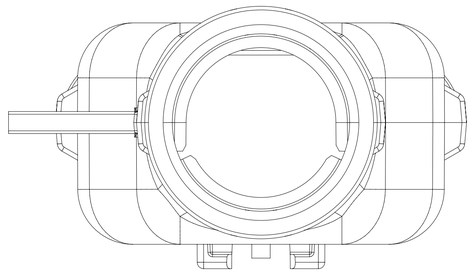

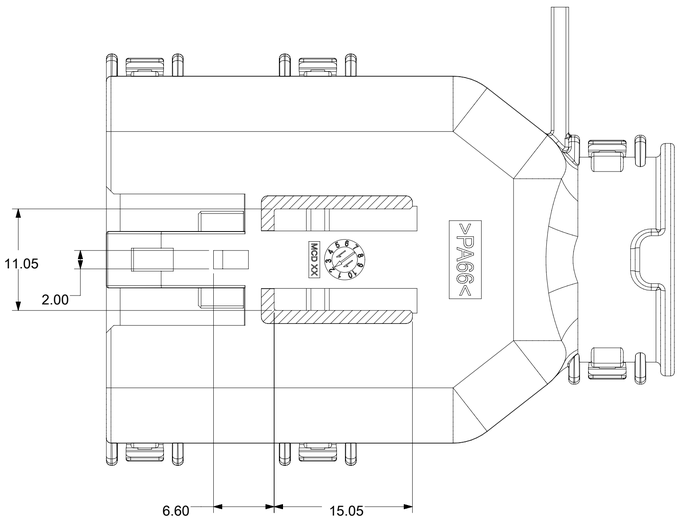

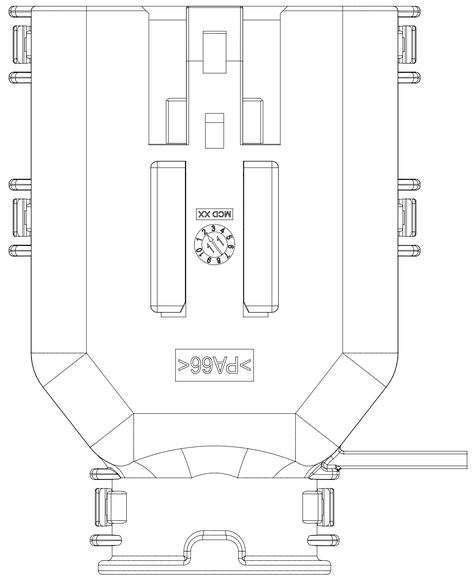

SECTION B-B

SYMBOLS	THIS DRAWING CONTAINS INFORMATION THAT IS PROPRIETARY TO MOLEX ELECTRONIC TECHNOLOGIES, LLC AND SHOULD NOT BE USED WITHOUT WRITTEN PERMISSION			
A = 0	DIMENSION UNITS: mm	SCALE: 3:1	CURRENT REV DESC:	molex
B = 0	GENERAL TOLERANCES (UNLESS SPECIFIED)			
C = 0	ANGULAR TOL ± 1.0 °		EC NO: 171650	MX150 BLADE DUAL ROW SEALED ASSEMBLY MAT SEAL
D = 0	4 PLACES ±		DRWN: PMANJUNATHAC 2018/01/03	
E = 0	3 PLACES ±		CHK'D: MVANSLAMBROU 2018/02/16	PRODUCT CUSTOMER DRAWING
F = 0	2 PLACES ± 0.1		APPR: MVANSLAMBROU 2018/02/16	
G = 0	1 PLACE ± 0.2		INITIAL REVISION:	DOCUMENT NUMBER: SD-33482-0001 / DOC TYPE: PSD / DOC PART: 001 / REVISION: E2
H = 0	0 PLACES ±		DRWN: APROFFITT 2014/04/28	
J = 0	DRAFT WHERE APPLICABLE MUST REMAIN WITHIN DIMENSIONS		APPR: VKOSHY 2014/05/14	
K = 0	THIRD ANGLE PROJECTION	DRAWING: A1-SIZE	SERIES: 33482	MATERIAL NUMBER / CUSTOMER: GENERAL MARKET / SHEET NUMBER: 9 OF 11

DOCUMENT STATUS	P1	RELEASE DATE	2018/02/16 22:02:26

SHEET DESCRIPTION

SCHLEMMER BACKSHELL CONFIGURATIONS

CHARTED DIMENSIONS

CKT	BLADE CONFIGURATION	RECEPTACLE CONFIGURATION	DIMENSIONS				
			M	N	P	R	T
2X3	STANDARD	STANDARD	106.83	32.75	31.75	29.00	29.50
	LENGTHENED		108.71				
2X4	STANDARD	STANDARD	106.83	33.50	31.90	30.70	30.70
2X6	STANDARD	STANDARD	106.83	37.84	37.27	35.83	36.83

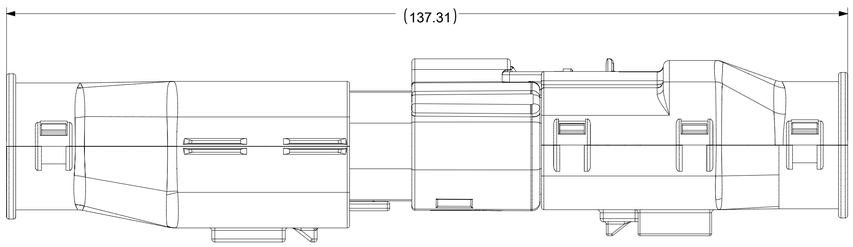

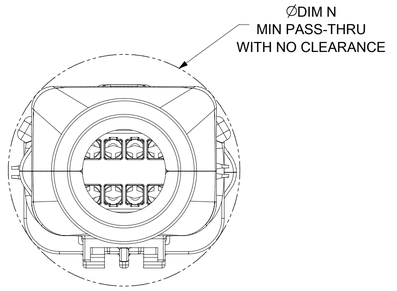

OVERALL MATED SYSTEM WITH BLADE AND RECEPTACLE BACKSHELL

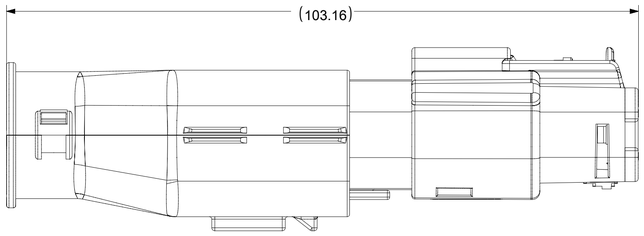

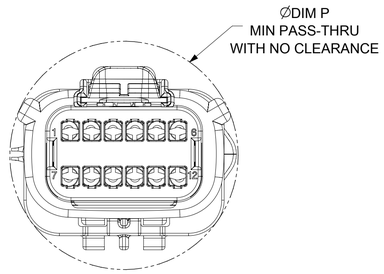

OVERALL MATED SYSTEM WITH BLADE BACKSHELL

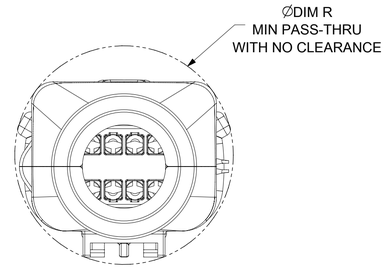

OVERALL MATED SYSTEM WITH RECEPTACLE BACKSHELL

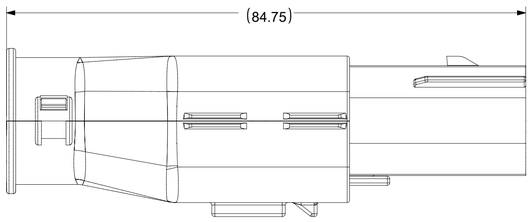

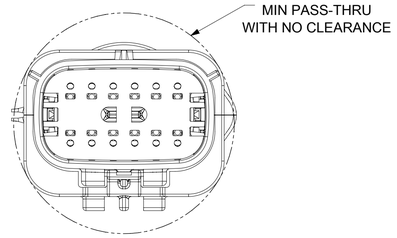

BLADE SEALED ASSEMBLY WITH BLADE BACKSHELL

SYMBOLS
= 0
= 0
= 0
= 0
= 0
= 0
= 0
= 0
= 0

THIS DRAWING CONTAINS INFORMATION THAT IS PROPRIETARY TO MOLEX ELECTRONIC TECHNOLOGIES, LLC AND SHOULD NOT BE USED WITHOUT WRITTEN PERMISSION

DIMENSION UNITS	SCALE
mm	2:1

GENERAL TOLERANCES (UNLESS SPECIFIED)

ANGULAR TOL	± 1.0 °
4 PLACES	±
3 PLACES	±
2 PLACES	± 0.1
1 PLACE	± 0.2
0 PLACES	±

DRAFT WHERE APPLICABLE MUST REMAIN WITHIN DIMENSIONS

CURRENT REV DESC:

EC NO: 171650

DRWN: PMANJUNATHAC 2018/01/03

CHK'D: MVANSLAMBROU 2018/02/16

APPR: MVANSLAMBROU 2018/02/16

INITIAL REVISION:

DRWN: APROFFITT 2014/04/28

APPR: VKOSHY 2014/05/14

THIRD ANGLE PROJECTION | DRAWING: A1-SIZE | SERIES: 33482

molex

MX150 BLADE
DUAL ROW SEALED ASSEMBLY MAT SEAL

PRODUCT CUSTOMER DRAWING

DOCUMENT NUMBER	DOC TYPE	DOC PART	REVISION
SD-33482-0001	PSD	001	E2

MATERIAL NUMBER	CUSTOMER	SHEET NUMBER
	GENERAL MARKET	10 OF 11

DOCUMENT STATUS	P1	RELEASE DATE	2018/02/16 22:02:26

SHEET DESCRIPTION

MOLEX BACKSHELL CONFIGURATIONS

CHARTED DIMENSIONS

CKT	BLADE CONFIGURATION	RECEPTACLE CONFIGURATION	DIMENSIONS									
			U	V	W	X	Y	AA	AB	AC	AD	AE
2X4	STANDARD	STANDARD	115.24	94.36	93.93	75.62	32.10	32.93	32.54	32.85	31.76	56.81
2X8	STANDARD	STANDARD	132.49	102.81	102.73	84.07	36.10	45.44	45.44	42.65	45.44	68.18
2X10	STANDARD	STANDARD	132.49	102.81	102.73	84.07	36.10	45.44	45.44	42.65	45.44	68.18

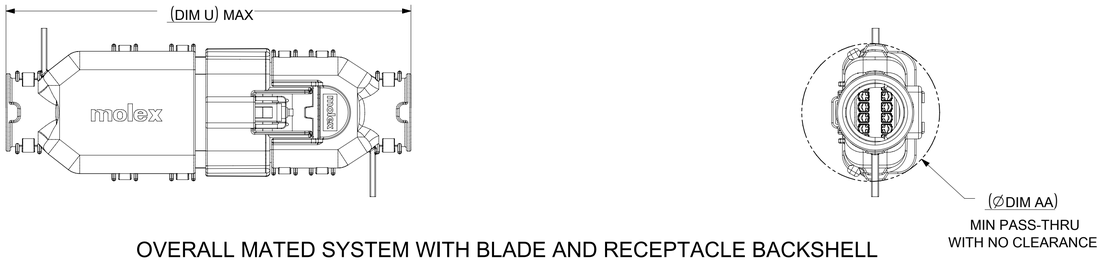

OVERALL MATED SYSTEM WITH BLADE AND RECEPTACLE BACKSHELL

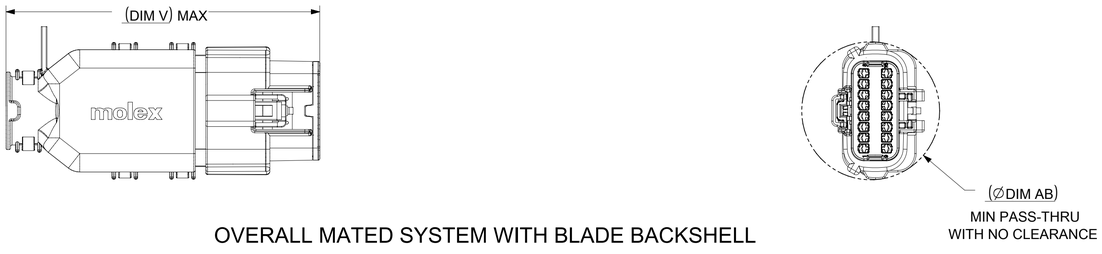

OVERALL MATED SYSTEM WITH BLADE BACKSHELL



OVERALL MATED SYSTEM WITH RECEPTACLE BACKSHELL

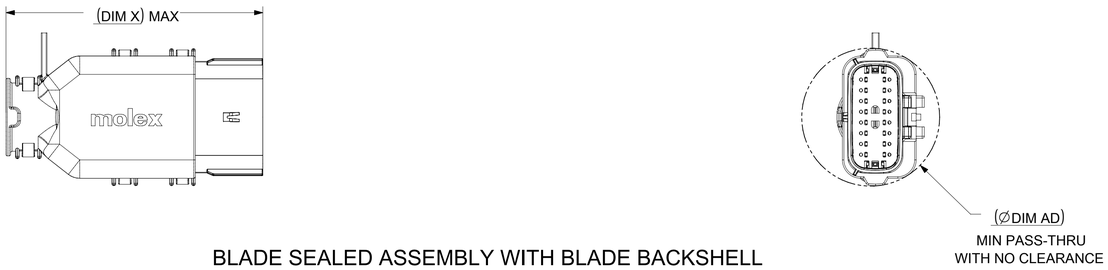

BLADE SEALED ASSEMBLY WITH BLADE BACKSHELL

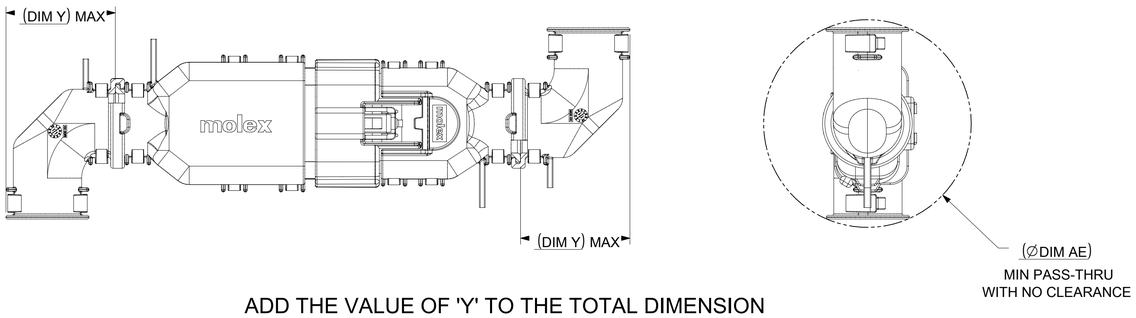

ADD THE VALUE OF 'Y' TO THE TOTAL DIMENSION
WHENEVER ADAPTOR IS USED

SYMBOLS	
A = 0	
C = 0	
F = 0	
S = 0	
= 0	
= 0	
= 0	
= 0	
= 0	

THIS DRAWING CONTAINS INFORMATION THAT IS PROPRIETARY TO MOLEX ELECTRONIC TECHNOLOGIES, LLC AND SHOULD NOT BE USED WITHOUT WRITTEN PERMISSION

DIMENSION UNITS	SCALE
mm	1:1

GENERAL TOLERANCES (UNLESS SPECIFIED)

ANGULAR TOL	±	1.0 °
4 PLACES	±	
3 PLACES	±	
2 PLACES	±	0.1
1 PLACE	±	0.2
0 PLACES	±	

DRAFT WHERE APPLICABLE MUST REMAIN WITHIN DIMENSIONS

CURRENT REV DESC:

EC NO: 171650

DRWN:	PMANJUNATHAC	2018/01/03
CHK'D:	MVANSLAMBROU	2018/02/16
APPR:	MVANSLAMBROU	2018/02/16

INITIAL REVISION:

DRWN:	APROFFITT	2014/04/28
APPR:	VKOSHY	2014/05/14

THIRD ANGLE PROJECTION	DRAWING	SERIES
	A1-SIZE	33482

molex

MX150 BLADE
DUAL ROW SEALED ASSEMBLY MAT SEAL

PRODUCT CUSTOMER DRAWING

DOCUMENT NUMBER	DOC TYPE	DOC PART	REVISION
SD-33482-0001	PSD	001	E2

MATERIAL NUMBER	CUSTOMER	SHEET NUMBER
	GENERAL MARKET	11 OF 11

DOCUMENT STATUS	P1	RELEASE DATE	2018/02/16 22:02:26

molex

a ÆƵ¥Ù¼Ø¤ [!59{9![95!{{9a.[Ða!¤{9![.ha!b5tЏh-¤{I99¤

!.,.w₫'E ¤ Џb	59{/w£¤Ђb	/h[hw	a!¤9w£[
![□Y	!h-{ЏbD¤¥9ЏbDht¤Ђb!	.,[!/Y	{t{.Ђ₫[hb DCnf
.'ЏD	!h-{ЏbD¤¥9ЏbDht¤Ђb.	[ЏDI¤DwI E	{t{.Ђ₫[hb DCnf
/□¥	!h-{ЏbD¤¥9ЏbDht¤Ђb/	.wh*b	{t{.Ђ₫[hb DCnf
5□Dx	!h-{ЏbD¤¥9ЏbDht¤Ђb5	Dw99b	{t{.Ђ₫[hb DCnf
/'5□D	!h-{ЏbD¤¥9ЏbDht¤Ђb/	5!w'DwI E	{t{.Ђ₫[hb DCnf
5'ЏD	!h-{ЏbD¤¥9ЏbDht¤Ђb5	{¤hb9DwI E	{t{.Ђ₫[hb DCnf
!'ЏD	!h-{ЏbD¤¥9ЏbDht¤Ђb!	ЁЖ[h*	{t{.Ђ₫[hb DCnf
D/t	Dwha a 9¤/!t t[-DO9S、	.,[!/Y	{t{.Ђ₫[hb DCnf
D/h	Dwha a 9¤/!t ht9b、	.,[!/Y	{t{.Ђ₫[hb DCnf
t[w	t[w	b!¤-w[	{t{.Ђ₫[hb DCnf
a	a!¤[9![	whЂt[.[-9	Ib!9w6b¤[D[-.w/!¤95-[ЏU/hb9

Chw!55Ш¤hb![ЏbChwa!¤Ђb{99 {5ｶｷｸｹｺｻｼｽｾｿﾀﾁﾂﾃﾄﾅﾆﾇﾈﾉﾊﾋﾌﾍﾎﾏﾐﾑﾒﾓﾔﾕﾖﾗﾘﾙﾚﾛﾜﾝ

!{{9a.[D5 9[/w£¤Ђb	!{{9a.[D t!w¤b-a.9w	/ha thb9b¤				.[h/Y95¤9ww Ib![{									{¤!¤-{	/ha a 9b¤{	ht¤Ђb![!¤¤!¤/I a 9b¤{(h[5{9t9w!¤9[Ð	
		¤!9tw₫(9b/9hC!b!..w₫'E¤Ђb tb5Ü!¤9[¤!9 tw₫(9b/9hC¤![¤/ha thb9b¤ü				/!'!ЭÐ°Ь¤![!b-a.9wib5Ü!¤9[.[h/Y95¤9ww Ib![th{Ш¤hb /!'!ЭÐ°Ь¤[h-¤!b-a.9wib5Ü!¤9[ht9b¤9ww Ib![th{Ш¤hb												
	!h-{ЏbD Y9Ð.ИhЏhw	Dwha a 9¤ /!t	t[w	a!¤{9![	ろ	わ	わ	ゑ										
Y9Ð!¤[!/Y	ｶｷｸｹｺ	D/h	t[w	a											{![9[.[9			
Y9Ð.ИtDI¤DwI E	ｶｷｸｹｻ	.'ЏD	D/h	t[w	a										{![9[.[9			
Y9Ð!¤w\h*b	ｶｷｸｹｼ	/□¥	D/h	t[w	a										bh¤v₫/ha a 9b595	{99	ｶｷｸｹｽ	
Y9Ð5¤Dv99b	ｶｷｸｹｾ	5□Dx	D/h	t[w	a										bh¤v₫/ha a 9b595	{99	ｶｷｸｹｿ	
Y9Ð!¤[!/Y	ｶｷｸｺﾀ	!□[Y	D/t	t[w	a		ｒ								{![9[.[9			
Y9Ð.ИtDI¤DwI E	ｶｷｸｺﾁ	.'ЏD	D/t	t[w	a		ｒ								{![9[.[9			
Y9Ð!¤w\h*b	ｶｷｸｺﾂ	/□¥	D/t	t[w	a		ｒ								bh¤v₫/ha a 9b595	{99	ｶｷｸｺﾀ	
Y9Ð5¤Dv99b	ｶｷｸｺﾃ	5□Dx	D/t	t[w	a		ｒ								bh¤v₫/ha a 9b595	{99	ｶｷｸｺﾁ	
Y9Ð!¤[!/Y	ｶｷｸｺﾄ	!□[Y	D/t	t[w	a		ｒ	ｒ							{![9[.[9			
Y9Ð.ИtDI¤DwI E	ｶｷｸｺﾅ	.'ЏD	D/t	t[w	a		ｒ	ｒ							{![9[.[9			
Y9Ð!¤w\h*b	ｶｷｸｺﾆ	/□¥	D/t	t[w	a		ｒ	ｒ							bh¤v₫/ha a 9b595	{99	ｶｷｸｺﾂ	
Y9Ð5¤Dv99b	ｶｷｸｺﾇ	5□Dx	D/t	t[w	a		ｒ	ｒ							bh¤v₫/ha a 9b595	{99	ｶｷｸｺﾃ	
Y9Ð!¤[!/Y	ｶｷｸｺﾈ	!□[Y	D/t	t[w	a		ｒ	ｒ	ゑ						{![9[.[9			
Y9Ð.ИtDI¤DwI E	ｶｷｸｺﾉ	.'ЏD	D/t	t[w	a	ろ	ｒ	ｒ	ゑ						{![9[.[9			
Y9Ð!¤w\h*b	ｶｷｸｺﾊ	/□¥	D/t	t[w	a	ろ	ｒ	ｒ	ゑ						bh¤v₫/ha a 9b595	{99	ｶｷｸｻﾅ	
Y9Ð5¤Dv99b	ｶｷｸｺﾋ	5□Dx	D/t	t[w	a	ろ	ｒ	ｒ	ゑ						bh¤v₫/ha a 9b595	{99	ｶｷｸｻﾆ	
Y9Ð!¤[!/Y	ｶｷｸｺﾌ	!□[Y	D/t	t[w	a	ろ	ｒ	ｒ							{![9[.[9			
Y9Ð!¤[!/Y	ｶｷｸｺﾍ	!□[Y	D/t	t[w	a				ゑ						{![9[.[9			
Y9Ð!¤[!/Y	ｶｷｸｺﾎ	!□[Y	D/t	t[w	a			ｒ	ゑ						{![9[.[9			
Y9Ð!¤[!/Y	ｶｷｸｺﾏ	!□[Y	D/t	t[w	a			ｒ							{![9[.[9			
Y9Ð!¤[!/Y	ｶｷｸｺﾐ	!□[Y	D/t	t[w	a	ろ	ｒ								{![9[.[9			
Y9Ð'¤6\w'Dw E	ｶｷｸｺﾑ	/'5D	D/h	t[w	a										{![9[.[9			
Y9Ð5¤{¤hb9Dw E	ｶｷｸｺﾒ	5'ЏD	D/t	t[w	a		ｒ								{![9[.[9			
Y9Ð'¤6\w'Dw E	ｶｷｸｺﾓ	/'5D	D/t	t[w	a		ｒ		ゑ						{![9[.[9			
Y9Ð5¤{¤hb9Dw E	ｶｷｸｺﾔ	5'ЏD	D/t	t[w	a		ｒ		ゑ						{![9[.[9			
Y9Ð'¤6\w'Dw E	ｶｷｸｺﾕ	/'5D	D/t	t[w	a	ろ	ｒ	ｒ	ゑ						{![9[.[9			
Y9Ð5¤{¤hb9Dw E	ｶｷｸｺﾖ	5'ЏD	D/t	t[w	a	ろ	ｒ	ｒ	ゑ						{![9[.[9			
Y9Ð!¤[!/Y	ｶｷｸｺﾗ	!□[Y	D/t	t[w	a		ｒ		ゑ						{![9[.[9			
Y9Ð.¤6X[h*	ｶｷｸｺﾘ	!'ЏD	D/h	t[w	a										{![9[.[9			
Y9Ð.ИtDI¤DwI E	ｶｷｸｺﾙ	.'ЏD	D/t	t[w	a	ろ			ゑ						{![9[.[9			
Y9Ð!¤[!/Y	ｶｷｸｺﾚ	!□[Y	D/t	t[w	a	ろ		ｒ							{![9[.[9			
Y9Ð'¤6\w'Dw E	ｶｷｸｺﾛ	/'5D	D/t	t[w	a		ｒ		ゑ						{![9[.[9			
Y9Ð.ИtDI¤DwI E	ｶｷｸｺﾜ	.'ЏD	D/t	t[w	a		ｒ		ゑ						{![9[.[9			
Y9Ð.ИtDI¤DwI E	ｶｷｸｺﾝ	.'ЏD	D/t	t[w	a				ゑ						{![9[.[9			
Y9Ð!¤[!/Y	ｶｷｸｻﾂ	!□[Y	D/t	t[w	a	ろ			ゑ						{![9[.[9			

molex

a /E ろ状ひゐゆ コ [! 59 { 9! [95 ! { { 9a . [Ða ! ¤ { 9! [. ha ! b5 t lb h- ¤ { I 99¤

! . . w¤ l E ¤lhb	5 9 { / w t ¤lhb	/ h [hw	a ! ¤ 9 w E [
! □ l Y	! h- {lb D ¤ ¥ 9 Ð b D ht ¤lhb !	. [! / Y	{ t { . ß ¤ [h b D C ¤ f
. ¦ Ð	! h- {lb D ¤ ¥ 9 Ð b D ht ¤lhb .	¦ Ð l = D w l E	{ t { . ß ¤ [h b D C ¤ f
/ □ ¥	! h- {lb D ¤ ¥ 9 Ð b D ht ¤lhb /	. wh* b	{ t { . ß ¤ [h b D C ¤ f
5 ¦ D ¥	! h- {lb D ¤ ¥ 9 Ð b D ht ¤lhb 5	D w 9 9 b	{ t { . ß ¤ [h b D C ¤ f
/ 5 Ð	! h- {lb D ¤ ¥ 9 Ð b D ht ¤lhb /	5 ! w ¥ D w l E	{ t { . ß ¤ [h b D C ¤ f
5 ¦ Ð	! h- {lb D ¤ ¥ 9 Ð b D ht ¤lhb 5	{ ¤ h b 9 D w l E	{ t { . ß ¤ [h b D C ¤ f
! ¦ D	! h- {lb D ¤ ¥ 9 Ð b D ht ¤lhb !	E 9 { ! h *	{ t { . ß ¤ [h b D C ¤ f
D /	D w h a a 9 ¥ / ! t . (¤ ! b 5 ! w ß .	. (! / Y	{ t { . ß ¤ [h b D C ¤ f
D / [	D w h a a 9 ¥ / ! t . [9 b D ¤ ! 9 b 9 5 .	. [! / Y	{ t { . ß ¤ [h b D C ¤ f
t [¥	t [¥	b ! ¤ - w [	{ t { . ß ¤ [h b D C ¤ f
a	a ! ¤ { 9 ! [	w h E ¤ [. [- 9	l b ! 9 w 6 b ¤ [E / - . w / ! ¤ 9 5 . (ß [U ! h b 9

! { { 9 a . [D 5 9 (/ w t ¤lhb	! { { 9 a . [D t ! w ¤ b - a . 9 w	/ h a t h b 9 b ¤				¤ ß 9 t w 8 { 9 b / 9 h C ! b ! . . w 9 ! E ¤lhb lb 5 U ! ¤ 9 [¤ ! 9 t w 8 { w b { 9 h C ¤ ! ¤ / h a t h b 9 b ¤ ≅						. [h / Y 9 5 ¤ 9 w a lb ! [{ / ! ! ⊎ Đ * ⊎ ! ! b - ¤ ! h - ¤ ! b - a . 9 w l b 5 U ! ¤ 9 [. [h / Y 9 5 ¤ 9 w a lb ! [t h { l ¤ l h b / ! ! ⊎ Đ * ⊎ ! ! h - ¤ ! b - a . 9 w l b 5 U ! ¤ 9 [h t 9 b ¤ 9 w a lb ! [t h { l ¤ l h b						{ ¤ ! ¤ - {	/ h a a 9 b ¤ {	h t ¤ l h b ! [! ¤ ¤ ! ¤ / 1 a 9 b ¤ { { h ! 5 { 9 t 9 w ¤ 9 [Đ
		I h - {lb D Y 9 Đ ¥ l h [h w	Dwha a 9 ¤ / ! t	t [w	a ! ¤ { 9 ! [	ろ	わ	わ	ゐ	糸	を									. ! / Y { I 9 [! ⊎ ! wL {	. ! / Y { I 9 [! ⊎ ! h - ¤ wL {
Y 9 Đ ! ¤ [! / Y	ｱゐろいおおを	! □ l Y	D /	t [w	a													{ ! [9 ! . [9		ｱゐ.おけほをす	ｱゐ.おけほをす
Y 9 Đ . ¤ t l Đ l = D w l E	ｱゐろいおおを	. ¦ Ð	D /	t [w	a													{ ! [9 ! . [9		ｱゐ.おけほをす	ｱゐ.おけほをす
Y 9 Đ / ¤ < w h * b	ｱゐろいおおを	/ □ ¥	D /	t [w	a													b h ¤ v ê / h a a 9 b 5 9 5	{ 9 9 ｱゐろいおおを	ｱゐ.おけほをす	ｱゐ.おけほをす
Y 9 Đ 5 ¤ Đ w Đ 9 b	ｱゐろいおおを	5 ¦ D ¥	D /	t [w	a													b h ¤ v ê / h a a 9 b 5 9 5	{ 9 9 ｱゐろいおおを	ｱゐ.おけほをす	ｱゐ.おけほをす
! h ¦ 5 Y 9 C	ｱゐろいおおを																				
Y 9 Đ ! ¤ [! / Y	ｱゐろいおおを	! □ l Y	D /	t [w	a			ｦ	ゑ									{ ! [9 ! . [9		ｱゐ.おけほをす	ｱゐ.おけほをす
Y 9 Đ . ¤ t l Đ l = D w l E	ｱゐろいおおを	. ¦ Ð	D /	t [w	a			ｦ	ゑ									{ ! [9 ! . [9		ｱゐ.おけほをす	ｱゐ.おけほをす
Y 9 Đ / ¤ < w h * b	ｱゐろいおおを	/ □ ¥	D /	t [w	a			ｦ	ゑ									b h ¤ v ê / h a a 9 b 5 9 5	{ 9 9 ｱゐろいおおを	ｱゐ.おけほをす	ｱゐ.おけほをす
Y 9 Đ 5 ¤ Đ w Đ 9 b	ｱゐろいおおを	5 ¦ D ¥	D /	t [w	a			ｦ	ゑ									b h ¤ v ê / h a a 9 b 5 9 5	{ 9 9 ｱゐろいおおを	ｱゐ.おけほをす	ｱゐ.おけほをす
! h ¦ 5 Y 9 C	ｱゐろいおおを																				
Y 9 Đ ! ¤ [! / Y	ｱゐろいおおを	! □ l Y	D /	t [w	a			ｦ										{ ! [9 ! . [9		ｱゐ.おけほをす	ｱゐ.おけほをす
Y 9 Đ ! ¤ [! / Y	ｱゐろいおおを	! □ l Y	D /	t [w	a		ｦ											{ ! [9 ! . [9		ｱゐ.おけほをす	ｱゐ.おけほをす
Y 9 Đ ! ¤ [! / Y	ｱゐろいおおを	! □ l Y	D /	t [w	a					糸	を							{ ! [9 ! . [9		ｱゐ.おけほをす	ｱゐ.おけほをす
Y 9 Đ ! ¤ [! / Y	ｱゐろいおおを	! □ l Y	D /	t [w	a		ｦ	ｦ	ゑ	糸								{ ! [9 ! . [9		ｱゐ.おけほをす	ｱゐ.おけほをす
Y 9 Đ ! ¤ [! / Y	ｱゐろいおおを	! □ l Y	D /	t [w	a	ろ	ｦ	ｦ	ゑ	糸	を							{ ! [9 ! . [9		ｱゐ.おけほをす	ｱゐ.おけほをす
Y 9 Đ ! ¤ [! / Y	ｱゐろいおおを	! □ l Y	D /	t [w	a	ろ	ｦ		ゑ	糸	を							{ ! [9 ! . [9		ｱゐ.おけほをす	ｱゐ.おけほをす
Y 9 Đ . ¤ t l Đ l = D w l E	ｱゐろいおおを	. ¦ Ð	D /	t [w	a	ろ		ｦ	ゑ	糸	を							{ ! [9 ! . [9		ｱゐ.おけほをす	ｱゐ.おけほをす
Y 9 Đ ! ¤ [! / Y	ｱゐろいおおを	! □ l Y	D /	t [w	a		ｦ	ｦ		糸	を							{ ! [9 ! . [9		ｱゐ.おけほをす	ｱゐ.おけほをす
Y 9 Đ / ¤ < w h * b	ｱゐろいおおを	/ □ ¥	D /	t [w	a			ｦ	ゑ									b h ¤ v ê / h a a 9 b 5 9 5	{ 9 9 ｱゐろいおおを	ｱゐ.おけほをす	ｱゐ.おけほをす
Y 9 Đ 5 ¤ Đ w Đ 9 b	ｱゐろいおおを	5 ¦ D ¥	D /	t [w	a			ｦ	ゑ									b h ¤ v ê / h a a 9 b 5 9 5	{ 9 9 ｱゐろいおおを	ｱゐ.おけほをす	ｱゐ.おけほをす
! h ¦ 5 Y 9 C	ｱゐろいおおを																				
Y 9 Đ ! ¤ [! / Y	ｱゐろいおおを	! □ l Y	D /	t [w	a			ｦ										{ ! [9 ! . [9		ｱゐ.おけほをす	ｱゐ.おけほをす
Y 9 Đ ! ¤ [! / Y	ｱゐろいおおを	! □ l Y	D /	t [w	a		ｦ											{ ! [9 ! . [9		ｱゐ.おけほをす	ｱゐ.おけほをす
Y 9 Đ ! ¤ [! / Y	ｱゐろいおおを	! □ l Y	D /	t [w	a					糸	を							{ ! [9 ! . [9		ｱゐ.おけほをす	ｱゐ.おけほをす
Y 9 Đ ! ¤ [! / Y	ｱゐろいおおを	! □ l Y	D /	t [w	a	ろ	ｦ	ｦ	ゑ	糸	を							{ ! [9 ! . [9		ｱゐ.おけほをす	ｱゐ.おけほをす
Y 9 Đ ! ¤ [! / Y	ｱゐろいおおを	! □ l Y	D /	t [w	a	ろ	ｦ	ｦ	ゑ	糸	を							{ ! [9 ! . [9		ｱゐ.おけほをす	ｱゐ.おけほをす
Y 9 Đ . ¤ t l Đ l = D w l E	ｱゐろいおおを	. ¦ Ð	D /	t [w	a	ろ		ｦ	ゑ	糸	を							{ ! [9 ! . [9		ｱゐ.おけほをす	ｱゐ.おけほをす
Y 9 Đ / ¤ < w h * b	ｱゐろいおおを	/ □ ¥	D /	t [w	a			ｦ	ゑ									b h ¤ v ê / h a a 9 b 5 9 5	{ 9 9 ｱゐろいおおを	ｱゐ.おけほをす	ｱゐ.おけほをす
Y 9 Đ 5 ¤ Đ w Đ 9 b	ｱゐろいおおを	5 ¦ D ¥	D /	t [w	a			ｦ	ゑ									b h ¤ v ê / h a a 9 b 5 9 5	{ 9 9 ｱゐろいおおを	ｱゐ.おけほをす	ｱゐ.おけほをす
! h ¦ 5 Y 9 C	ｱゐろいおおを																				
Y 9 Đ ! ¤ [! / Y	ｱゐろいおおを	! □ l Y	D /	t [w	a				ゑ									{ ! [9 ! . [9		ｱゐ.おけほをす	ｱゐ.おけほをす
Y 9 Đ ! ¤ [! / Y	ｱゐろいおおを	! □ l Y	D /	t [w	a		ｦ											{ ! [9 ! . [9		ｱゐ.おけほをす	ｱゐ.おけほをす
Y 9 Đ ! ¤ [! / Y	ｱゐろいおおを	! □ l Y	D /	t [w	a					糸	を							{ ! [9 ! . [9		ｱゐ.おけほをす	ｱゐ.おけほをす
Y 9 Đ ! ¤ [! / Y	ｱゐろいおおを	! □ l Y	D /	t [w	a	ろ	ｦ	ｦ	ゑ	糸	を							{ ! [9 ! . [9		ｱゐ.おけほをす	ｱゐ.おけほをす
Y 9 Đ ! ¤ [! / Y	ｱゐろいおおを	! □ l Y	D /	t [w	a	ろ	ｦ	ｦ	ゑ	糸	を							{ ! [9 ! . [9		ｱゐ.おけほをす	ｱゐ.おけほをす
Y 9 Đ . ¤ t l Đ l = D w l E	ｱゐろいおおを	. ¦ Ð	D /	t [w	a	ろ		ｦ	ゑ	糸	を							{ ! [9 ! . [9		ｱゐ.おけほをす	ｱゐ.おけほをす
Y 9 Đ / ¤ < w h * b	ｱゐろいおおを	/ □ ¥	D /	t [w	a			ｦ	ゑ									b h ¤ v ê / h a a 9 b 5 9 5	{ 9 9 ｱゐろいおおを	ｱゐ.おけほをす	ｱゐ.おけほをす
Y 9 Đ 5 ¤ Đ w Đ 9 b	ｱゐろいおおを	5 ¦ D ¥	D /	t [w	a			ｦ	ゑ									b h ¤ v ê / h a a 9 b 5 9 5	{ 9 9 ｱゐろいおおを	ｱゐ.おけほをす	ｱゐ.おけほをす
Y 9 Đ ! ¤ 9 X { l h *	ｱゐろいおおを	! ¦ Đ	D /	t [w	a													{ ! [9 ! . [9		ｱゐ.おけほをす	ｱゐ.おけほをす
Y 9 Đ ! ¤ [! / Y	ｱゐろいおおを	! □ l Y	D /	t [w	a			ｦ	ゑ	糸	を							{ ! [9 ! . [9		ｱゐ.おけほをす	ｱゐ.おけほをす

molex

a /Ð₹₫ʰ₫₫ɔ [!59{9![95!{{9a.[Ða!¤{9![.ha !b5tŁbh-¤{I99¤

!{{9a.[Ð59{/wŁ¤ŁhbŁ	!{{9a.[Ð t!w¤b-a.9w	/ha thb9b¤				.[h/Y95¤9wa Ib![{										{¤¤-{	/ha a 9b¤{	ht¤Łhb![!¤¤{a/I a 9b¤{{h[5{9t9w¤9[Ð	
		¤{9tw0{9b/9hC!b!..w9ʲŁ¤Łhb Ib5Ù!¤9{¤{9 tw0{9b/9hC¤{!¤/ha thb9b¤ä				/!'!ʁÐ° ʁ¤{!b-a.9wib5Ù!¤9{.[h/Y95¤9wa Ib![{th{ʁ¤Łhb /!'!ʁÐ° ʁ¤{h-¤!b-a.9wib5Ù!¤9{ht9b¤9wa Ib![{th{ʁ¤Łhb												
		I h-{ÐbD Y9Ðʁ¤h[hw	Dwha a 9¤ /!t	t[w	a!¤{9![	ろ	わ	わ	ゐ	系	を							.!/Y{I9{[°ʁ¤ wŁ{	.!/Y{I9{[°ʁ¤h-¤ wŁ{
Y9Ð.¤t[!/Y	ｱｲｳｴｵｶｷｸｹｺ	!□□Y	D/	t[w	a		ゃ	ゃ									{![9[.[9		ｱｲｳ.ｴｵｶｷｸｹｺ	ｱｲｳ.ｴｵｶｷｸｹｺ
Y9Ð.¤t[DI¤Dwl Ɛ	ｻｼｽｾｿﾀﾁﾂﾃﾄ	.□Ð	D/	t[w	a		ゃ	ゃ									{![9[.[9		ｱｲｳ.ｴｵｶｷｸｹｺ	ｱｲｳ.ｴｵｶｷｸｹｺ
Y9Ð/¤6!wʼDwl Ɛ	ﾅﾆﾇﾈﾉﾊﾋﾌﾍﾎ	/□5D	D/	t[w	a						ゖ						{![9[.[9		ｱｲｳ.ｴｵｶｷｸｹｺ	ｱｲｳ.ｴｵｶｷｸｹｺ
Y9Ð!¤t[!/Y	ﾏﾐﾑﾒﾓﾔﾕﾖﾗﾘ	!□□Y	D/	t[w	a				ゔ		ゖ						{![9[.[9		ｱｲｳ.ｴｵｶｷｸｹｺ	ｱｲｳ.ｴｵｶｷｸｹｺ
Y9Ð!¤t[!/Y	ﾏﾐﾑﾒﾓﾔﾕﾖﾗﾘ	!□□Y	D/	t[w	a	ゔ		ゃ		ゕ							{![9[.[9		ｱｲｳ.ｴｵｶｷｸｹｺ	ｱｲｳ.ｴｵｶｷｸｹｺ
Y9Ð!¤t[!/Y	ﾏﾐﾑﾒﾓﾔﾕﾖﾗﾘ	!□□Y	D/	t[w	a		ゃ		ゔ		ゖ						{![9[.[9		ｱｲｳ.ｴｵｶｷｸｹｺ	ｱｲｳ.ｴｵｶｷｸｹｺ
Y9Ð!¤t[!/Y	ﾏﾐﾑﾒﾓﾔﾕﾖﾗﾘ	!□□Y	D/	t[w	a	ゔ				ゕ							{![9[.[9		ｱｲｳ.ｴｵｶｷｸｹｺ	ｱｲｳ.ｴｵｶｷｸｹｺ
Y9Ð!¤t[!/Y	ﾏﾐﾑﾒﾓﾔﾕﾖﾗﾘ	!□□Y	D/	t[w	a	ゔ		ゃ	ゕ								{![9[.[9		ｱｲｳ.ｴｵｶｷｸｹｺ	ｱｲｳ.ｴｵｶｷｸｹｺ
Y9Ð!¤t[!/Y	ﾏﾐﾑﾒﾓﾔﾕﾖﾗﾘ	!□□Y	D/	t[w	a	ゔ		ゃ		ゕ							{![9[.[9		ｱｲｳ.ｴｵｶｷｸｹｺ	ｱｲｳ.ｴｵｶｷｸｹｺ
Y9Ð!¤t[!/Y	ﾏﾐﾑﾒﾓﾔﾕﾖﾗﾘ	!□□Y	D/	t[w	a	ゔ	ゃ	ゃ									{![9[.[9		ｱｲｳ.ｴｵｶｷｸｹｺ	ｱｲｳ.ｴｵｶｷｸｹｺ
Y9Ð!¤t[!/Y	ﾏﾐﾑﾒﾓﾔﾕﾖﾗﾘ	!□□Y	D/	t[w	a	ゔ			ゕ								{![9[.[9		ｱｲｳ.ｴｵｶｷｸｹｺ	ｱｲｳ.ｴｵｶｷｸｹｺ
Y9Ð.¤t[DI¤Dwl Ɛ	ｻｼｽｾｿﾀﾁﾂﾃﾄ	.□Ð	D/	t[w	a	ゔ											{![9[.[9		ｱｲｳ.ｴｵｶｷｸｹｺ	ｱｲｳ.ｴｵｶｷｸｹｺ
Y9Ð.¤t[DI¤Dwl Ɛ	ｻｼｽｾｿﾀﾁﾂﾃﾄ	.□Ð	D/	t[w	a					ゕ							{![9[.[9		ｱｲｳ.ｴｵｶｷｸｹｺ	ｱｲｳ.ｴｵｶｷｸｹｺ
Y9Ð!¤t[!/Y	ﾏﾐﾑﾒﾓﾔﾕﾖﾗﾘ	!□□Y	D/	t[w	a	ゔ				ゕ							{![9[.[9		ｱｲｳ.ｴｵｶｷｸｹｺ	ｱｲｳ.ｴｵｶｷｸｹｺ
Y9Ð.¤t[!/Y	ﾏﾐﾑﾒﾓﾔﾕﾖﾗﾘ	!□□Y	D/	t[w	a			ゖ	ゕ		ゖ						{![9[.[9		ｱｲｳ.ｴｵｶｷｸｹｺ	ｱｲｳ.ｴｵｶｷｸｹｺ
Y9Ð.¤t[DI¤Dwl Ɛ	ｻｼｽｾｿﾀﾁﾂﾃﾄ	.□Ð	D/	t[w	a					ゕ	ゖ						{![9[.[9		ｱｲｳ.ｴｵｶｷｸｹｺ	ｱｲｳ.ｴｵｶｷｸｹｺ

molex

a ÆƵ$Ø¼ØƵ [!59{9! [95!{{9a .{Ða!¤{9! [
. ha !b5tlb h-¤{I99¤

!. :. wP E ¤lh b	59{ ¼¤ ¤lh b	/h]hw	a ! ¤9w[[
! □ E Y	I h- {lbD¤Y90ØlhDhl¤lh b !	_ [! / Y	t{ [ãlE]h b DCnf
_]D	I h- {lbD¤Y90ØlhDhl¤lh b ,	[Ø[¤ Dwl E	t{ [ãlE]h b DCnf
/ □ w	I h- {lbD¤Y90ØlhDhl¤lh b 5	vh* b	t{ [ãlE]h b DCnf
5]Dw	I h- {lbD¤Y90ØlhDhl¤lh b 5	Dw90b	t{ [ãlE]h b DCnf
/ 5]D	I h- {lbD¤Y90ØlhDhl¤lh b /	5! ¼¤ Dwl E	t{ [ãlE]h b DCnf
5]D	I h- {lbD¤Y90ØlhDhl¤lh b 5	{¤h b/9 Dwl E	t{ [ãlE]h b DCnf
!]D	I h- {lbD¤Y90ØlhDhl¤lh b !	Ø[ ]h*	t{ [ãlE]h b DCnf
D/ t	Dwha a 9¤/! t [- DD9$_	_ [! / Y	t{ [ãlE]h b DCnf
D/ h	Dwha a 9¤/! t h!9$_	_ [! / Y	t{ [ãlE]h b DCnf
t [w	t [w	b! ¤ w [	t{ [ãlE]h b DCnf
a ¼	a ! ¤ {9! [	w {¤ w95	lb! 9w8h¤l D[- , w4/ ! ¤95 ([¢Ù h b9
a □	a ! ¤ {9! [	w¤ l [, [- 9	lb! 9w8h¤l D[- , w4/ ! ¤95 ([¢Ù h b9

Ow! 55¤lh b! [lb Dh w ! ¤lh b {99 {5!

| ! {{9a . [D5]¼ ¤lh b | [{{9a . [D t ! w b- a . 9w | /h a t h b 9b¤ | | | | | | | | | | | | | | | _ [h / Y95 ¤9ww lb! [{ | | | | | | | | | | | | | | | {¤! ¤- { | /h a 9b¤{ | h t ¤ b! [! ¤! ¤/ ! a 9b¤{ {h [5 {9t 9w ¤9[D | | | | | | | | | | | | | | |
|---|---|---|---

molex

a Æ⊃₩ω₩Ω. [! 59{9! [95 ! {{9a . {Ða ! ¤{9! [
. ha ! b5 t lb h- ¤ [99¤

| ! {{9a . {Ð5 ¥/ wΣ ¤lb b- a . 9w | /ha thb9b¤ | | | | | . [h/Y95 ¤9wa lb! [{ | | | | | | | | | | | | {¤¤ ¤- { | /ha ¤ 9b¤{ | ht¤lb¤! [! ¤¤ ¤/ ! a 9b¤{ ch[5 (9t 9w ¤9[D | | | | | | | | | | | |

molex

a /ᄃ₹₹ぬ₹₹₹

molex

a A=5¥hu¥B=: [! 59{9! [95 ! {{Ða ! ¤{9! [. ha ! b5 tlb h- ¤{I 99¤

!. . w¥ l{ ¤hb	5 9{/w£¤lhb	/h{hw	a ! ¤9w£ [
! □£Y	! h- (lbD¥9¥9Db D ht¤lhb !	. [/Y	{t{.ãx£]hb DCzjf
. □D	! h- (lbD¥9¥9Db D ht¤lhb .	[lDl = Dwl E	{t{.ãx£]hb DCzjf
/ □¤	! h- (lbD¥9¥9Db D ht¤lhb /	. wh* b	{t{.ãx£]hb DCzjf
5 lDa	! h- (lbD¥9¥9Db D ht¤lhb 5	Dw9¥b	{t{.ãx£]hb DCzjf
! □£	! h- (lbD¥9¥9Db D ht¤lhb !	£9[h/*	{t{.ãx£]hb DCzjf
/ □SD	! h- (lbD¥9¥9Db D ht¤lhb /	5! w¥ Dwl E	{t{.ãx£]hb DCzjf
5 □D	! h- (lbD¥9¥9Db D ht¤lhb 5	{¤hb9 Dwl E	{t{.ãx£]hb DCzjf
D/t	Dwha a 9¤/! t t[- DD95、	. [/Y	{t{.ãx£]hb DCzjf
t[w.	t[w.	b! ≈ w[	{t{.ãx£]hb DCzjf
a !ä¥	a ! ¤{9! [	w {¤w95	lb! 9w6h=[6)[- . w/ ! =95 ([l[l/hb9
a !□	a ! ¤{9! [	wh£l [. [- 9	lb! 9w6h=[6)[- . w/ ! =95 ([l[l/hb9

Chwl 55t¤hb! [lb¤hwa ! ¤lhb {99 {5!ãx£]hb DCzjf

! {{9a . [Ð59{/w£¤lhb	! {{9a . [Ðt[w¥ b- a . 9w	/h a thb9b¤				¤[9 t w6(9b/9 h C! b ! . . w¥ l ¤lhb lb5/! ¤9[¤[9 t w6(9b/9 h C¤[! ¤/h a thb9b¤¤	. [h/Y95 ¤9wa lb! [{											(¤[¤- (	/h a a 9b¤[	ht¤lhb! [! ¤¤[¤/! a 9b¤[{h{5 {9t 9w ¤9[Ð
		! h- (lbD Y9¥b£h[hw	Dwha a 9¤ / ! t	t[w.	a ! ¤{9! [	/! ¹ lbD* lbl ! b- a . 9wlb5/! ¤9[. [h/Y95 ¤9wa lb! [th{ü¤hb	ろ	わ	わ	ゐ	ゑ	を	ん	ラ	`	ヺ1	ヺ5	ヺわ									. ! / Y{ ! 9[[° lbl wL (	. ! / Y{ ! 9[[° lbl h- ¤ wL (
Y9D! ¤[! / Y	ｱｱｽｽｽｽｽｲ	! □£Y	D/t	t[w.	a ! ¤lä															t{ ! bb95 h. {h[9[/9b/9	{99 ｱｱｽｽｽｽｽｲ	ｲゐ ｽｲ5ｽｽｲ	ｲゐ ｽｲ5ｽｽｲ
Y9Ð. ¤f lDl = Dwl E	ｱｱｽｽｽｽｽｳ	. [D	D/t	t[w.	a ! ¤lä															t{ ! bb95 h. {h[9[/9b/9	{99 ｱｱｽｽｽｽｽｳ	ｲゐ ｽｲ5ｽｽｳ	ｲゐ ｽｲ5ｽｽｳ
Y9D/¤r wh* b	ｱｱｽｽｽｽｽｴ	/ □¤	D/t	t[w.	a ! ¤lä															t{ ! bb95 h. {h[9[/9b/9	{99 ｱｱｽｽｽｽｽｴ	ｲゐ ｽｲ5ｽｽｴ	ｲゐ ｽｲ5ｽｽｴ
Y9D5=Dw9¥b	ｱｱｽｽｽｽｽｵ	5 lDa	D/t	t[w.	a ! ¤lä															t{ ! bb95 h. {h[9[/9b/9	{99 ｱｱｽｽｽｽｽｵ	ｲゐ ｽｲ5ｽｽｵ	ｲゐ ｽｲ5ｽｽｵ
' h lS Y9£	ｱｱｽｽｽｽｽｶ																											
Y9D! ¤[! / Y	ｱｱｽｽｽｽｽｷ	! □£Y	D/t	t[w.	a ! ¤lä							を								t{ ! bb95 h. {h[9[/9b/9	{99 ｱｱｽｽｽｽｽｷ	ｲゐ ｽｲ5ｽｽｷ	ｲゐ ｽｲ5ｽｽｷ
Y9Ð. ¤f lDl = Dwl E	ｱｱｽｽｽｽｽｸ	. [D	D/t	t[w.	a ! ¤lä							を								t{ ! bb95 h. {h[9[/9b/9	{99 ｱｱｽｽｽｽｽｸ	ｲゐ ｽｲ5ｽｽｸ	ｲゐ ｽｲ5ｽｽｸ
Y9D/¤r wh* b	ｱｱｽｽｽｽｽｹ	/ □¤	D/t	t[w.	a ! ¤lä							を								t{ ! bb95 h. {h[9[/9b/9	{99 ｱｱｽｽｽｽｽｹ	ｲゐ ｽｲ5ｽｽｹ	ｲゐ ｽｲ5ｽｽｹ
Y9D5=Dw9¥b	ｱｱｽｽｽｽｽｺ	5 lDa	D/t	t[w.	a ! ¤lä							を								t{ ! bb95 h. {h[9[/9b/9	{99 ｱｱｽｽｽｽｽｺ	ｲゐ ｽｲ5ｽｽｺ	ｲゐ ｽｲ5ｽｽｺ
' h lS Y9£	ｱｱｽｽｽｽｽｻ																											
Y9D! ¤[! / Y	ｱｱｽｽｽｽｽｼ	! □£Y	D/t	t[w.	a ! ¤lä	ｦ						を	ん							t{ ! bb95 h. {h[9[/9b/9	{99 ｱｱｽｽｽｽｽｼ	ｲゐ ｽｲ5ｽｽｼ	ｲゐ ｽｲ5ｽｽｼ
Y9Ð. ¤f lDl = Dwl E	ｱｱｽｽｽｽｽｽ	. [D	D/t	t[w.	a ! ¤lä	ｦ						を	ん							t{ ! bb95 h. {h[9[/9b/9	{99 ｱｱｽｽｽｽｽｽ	ｲゐ ｽｲ5ｽｽｽ	ｲゐ ｽｲ5ｽｽｽ
Y9D/¤r wh* b	ｱｱｽｽｽｽｽｾ	/ □¤	D/t	t[w.	a ! ¤lä	ｦ						を	ん							t{ ! bb95 h. {h[9[/9b/9	{99 ｱｱｽｽｽｽｽｾ	ｲゐ ｽｲ5ｽｽｾ	ｲゐ ｽｲ5ｽｽｾ
Y9D5=Dw9¥b	ｱｱｽｽｽｽｽｿ	5 lDa	D/t	t[w.	a ! ¤lä	ｦ						を	ん							t{ ! bb95 h. {h[9[/9b/9	{99 ｱｱｽｽｽｽｽｿ	ｲゐ ｽｲ5ｽｽｿ	ｲゐ ｽｲ5ｽｽｿ
' h lS Y9£	ｱｱｽｽｽｽｾ｀																											
Y9D! ¤[! / Y	ｱｱｽｽｽｽｾａ	! □£Y	D/t	t[w.	a ! ¤lä	ｦ						を	ん						ラ	t{ ! bb95 h. {h[9[/9b/9	{99 ｱｱｽｽｽｽｾａ	ｲゐ ｽｲ5ｽｽａ	ｲゐ ｽｲ5ｽｽａ
Y9Ð. ¤f lDl = Dwl E	ｱｱｽｽｽｽｾｂ	. [D	D/t	t[w.	a ! ¤lä	ｦ						を	ん						ラ	t{ ! bb95 h. {h[9[/9b/9	{99 ｱｱｽｽｽｽｾｂ	ｲゐ ｽｲ5ｽｽｂ	ｲゐ ｽｲ5ｽｽｂ
Y9D/¤r wh* b	ｱｱｽｽｽｽｾｃ	/ □¤	D/t	t[w.	a ! ¤lä	ｦ						を	ん						ラ	t{ ! bb95 h. {h[9[/9b/9	{99 ｱｱｽｽｽｽｾｃ	ｲゐ ｽｲ5ｽｽｃ	ｲゐ ｽｲ5ｽｽｃ
Y9D5=Dw9¥b	ｱｱｽｽｽｽｾｄ	5 lDa	D/t	t[w.	a ! ¤lä	ｦ						を	ん						ラ	t{ ! bb95 h. {h[9[/9b/9	{99 ｱｱｽｽｽｽｾｄ	ｲゐ ｽｲ5ｽｽｄ	ｲゐ ｽｲ5ｽｽｄ
' h lS Y9£	ｱｱｽｽｽｽｾｅ																											
Y9D! ¤[! / Y	ｱｱｽｽｽｽｾｆ	! □£Y	D/t	t[w.	a ! ¤lä							を							ラ	t{ ! bb95 h. {h[9[/9b/9	{99 ｱｱｽｽｽｽｾｆ	ｲゐ ｽｲ5ｽｽｅ	ｲゐ ｽｲ5ｽｽｅ
Y9D! ¤[! / Y	ｱｱｽｽｽｽｿ	! □£Y	D/t	t[w.	a ! ¤lä	ｦ	ｩ	ｨ	ｫ	ｬ	を	ん	ｭ			ヺ1	ヺ5	ヺわ		t{ ! bb95 h. {h[9[/9b/9	{99 ｱｱｽｽｽｽｿ	ｲゐ ｽｲ5ｽｽｆ	ｲゐ ｽｲ5ｽｽｆ
Y9Ð. ¤f lDl = Dwl E	ｱｱｽｽｽｽｿ	. [D	D/t	t[w.	a ! ¤lä	ｦ	ｩ	ｨ	ｫ	ｬ	を	ん	ｭ			ヺ1	ヺ5	ヺわ		t{ ! bb95 h. {h[9[/9b/9	{99 ｱｱｽｽｽｽｿ	ｲゐ ｽｲ5ｽｽｇ	ｲゐ ｽｲ5ｽｽｇ
Y9D/¤r wh* b	ｱｱｽｽｽｽｿ	/ □¤	D/t	t[w.	a ! ¤lä	ｦ	ｩ	ｨ	ｫ	ｬ	を	ん	ｭ			ヺ1	ヺ5	ヺわ		t{ ! bb95 h. {h[9[/9b/9	{99 ｱｱｽｽｽｽｿ	ｲゐ ｽｲ5ｽｽｈ	ｲゐ ｽｲ5ｽｽｈ
Y9D5=Dw9¥b	ｱｱｽｽｽｽｿ	5 lDa	D/t	t[w.	a ! ¤lä	ｦ	ｩ	ｨ	ｫ	ｬ	を	ん	ｭ			ヺ1	ヺ5	ヺわ		t{ ! bb95 h. {h[9[/9b/9	{99 ｱｱｽｽｽｽｿ	ｲゐ ｽｲ5ｽｽｉ	ｲゐ ｽｲ5ｽｽｉ
' h lS Y9£	ｱｱｽｽｽｾ｀																											
Y9D! ¤[! / Y	ｱｱｽｽｽｾａ	! □£Y	D/t	t[w.	a ! ¤lä			ｨ	ｫ											t{ ! bb95 h. {h[9[/9b/9	{99 ｱｱｽｽｽｾａ	ｲゐ ｽｲ5ｽｽｊ	ｲゐ ｽｲ5ｽｽｊ
Y9D! ¤[! / Y	ｱｱｽｽｽｾｂ	! □£Y	D/t	t[w.	a ! ¤lä			ｨ	ｫ											t{ ! bb95 h. {h[9[/9b/9	{99 ｱｱｽｽｽｾｂ	ｲゐ ｽｲ5ｽｽｋ	ｲゐ ｽｲ5ｽｽｋ
Y9D! ¤[! / Y	ｱｱｽｽｽｾｃ	! □£Y	D/t	t[w.	a ! ¤lä			ｨ	ｫ											t{ ! bb95 h. {h[9[/9b/9	{99 ｱｱｽｽｽｾｃ	ｲゐ ｽｲ5ｽｽｌ	ｲゐ ｽｲ5ｽｽｌ
Y9D! ¤[! / Y	ｱｱｽｽｽｾｄ	! □£Y	D/t	t[w.	a ! ¤lä			ｨ	ｫ											t{ ! bb95 h. {h[9[/9b/9	{99 ｱｱｽｽｽｾｄ	ｲゐ ｽｲ5ｽｽｍ	ｲゐ ｽｲ5ｽｽｍ
Y9D! ¤[! / Y	ｱｱｽｽｽｾｅ	! □£Y	D/t	t[w.	a ! ¤lä			ｨ	ｫ											t{ ! bb95 h. {h[9[/9b/9	{99 ｱｱｽｽｽｾｅ	ｲゐ ｽｲ5ｽｽｎ	ｲゐ ｽｲ5ｽｽｎ
Y9D! ¤[! / Y	ｱｱｽｽｽｾｆ	! □£Y	D/t	t[w.	a ! ¤lä			ｨ	ｫ											t{ ! bb95 h. {h[9[/9b/9	{99 ｱｱｽｽｽｾｆ	ｲゐ ｽｲ5ｽｽｏ	ｲゐ ｽｲ5ｽｽｏ
Y9D! ¤[! / Y	ｱｱｽｽｽｾｇ	! □£Y	D/t	t[w.	a ! ¤lä			ｨ	ｫ											t{ ! bb95 h. {h[9[/9b/9	{99 ｱｱｽｽｽｾｇ	ｲゐ ｽｲ5ｽｽｐ	ｲゐ ｽｲ5ｽｽｐ
Y9D! ¤[! / Y	ｱｱｽｽｽｾｈ	! □£Y	D/t	t[w.	a ! ¤lä			ｨ	ｫ											t{ ! bb95 h. {h[9[/9b/9	{99 ｱｱｽｽｽｾｈ	ｲゐ ｽｲ5ｽｽｑ	ｲゐ ｽｲ5ｽｽｑ
Y9D! ¤[! / Y	ｱｱｽｽｽｾｉ	! □£Y	D/t	t[w.	a ! ¤lä			ｨ	ｫ											t{ ! bb95 h. {h[9[/9b/9	{99 ｱｱｽｽｽｾｉ	ｲゐ ｽｲ5ｽｽｒ	ｲゐ ｽｲ5ｽｽｒ
Y9D! ¤[! / Y	ｱｱｽｽｽｾｊ	! □£Y	D/t	t[w.	a ! ¤lä			ｨ	ｫ											t{ ! bb95 h. {h[9[/9b/9	{99 ｱｱｽｽｽｾｊ	ｲゐ ｽｲ5ｽｽｓ	ｲゐ ｽｲ5ｽｽｓ
Y9D! ¤[! / Y	ｱｱｽｽｽｾｋ	! □£Y	D/t	t[w.	a ! ¤lä			ｨ	ｫ											t{ ! bb95 h. {h[9[/9b/9	{99 ｱｱｽｽｽｾｋ	ｲゐ ｽｲ5ｽｽｔ	ｲゐ ｽｲ5ｽｽｔ
Y9D! ¤[! / Y	ｱｱｽｽｽｾｌ	! □£Y	D/t	t[w.	a ! ¤lä			ｨ	ｫ											t{ ! bb95 h. {h[9[/9b/9	{99 ｱｱｽｽｽｾｌ	ｲゐ ｽｲ5ｽｽｕ	ｲゐ ｽｲ5ｽｽｕ
Y9D! ¤[! / Y	ｱｱｽｽｽｾｍ	! □£Y	D/t	t[w.	a ! ¤lä			ｨ	ｫ											t{ ! bb95 h. {h[9[/9b/9	{99 ｱｱｽｽｽｾｍ	ｲゐ ｽｲ5ｽｽｖ	ｲゐ ｽｲ5ｽｽｖ
Y9D! ¤[! / Y	ｱｱｽｽｽｾｎ	! □£Y	D/t	t[w.	a ! ¤lä			ｨ	ｫ											t{ ! bb95 h. {h[9[/9b/9	{99 ｱｱｽｽｽｾｎ	ｲゐ ｽｲ5ｽｽｗ	ｲゐ ｽｲ5ｽｽｗ
Y9D! ¤[! / Y	ｱｱｽｽｽｾｏ	! □£Y	D/t	t[w.	a ! ¤lä			ｨ	ｫ											t{ ! bb95 h. {h[9[/9b/9	{99 ｱｱｽｽｽｾｏ	ｲゐ ｽｲ5ｽｽｘ	ｲゐ ｽｲ5ｽｽｘ
Y9D! ¤[! / Y	ｱｱｽｽｽｾｐ	! □£Y	D/t	t[w.	a ! ¤lä			ｨ	ｫ											t{ ! bb95 h. {h[9[/9b/9	{99 ｱｱｽｽｽｾｐ	ｲゐ ｽｲ5ｽｽｙ	ｲゐ ｽｲ5ｽｽｙ
Y9D! ¤[! / Y	ｱｱｽｽｽｾｑ	! □£Y	D/t	t[w.	a ! ¤lä			ｨ	ｫ											t{ ! bb95 h. {h[9[/9b/9	{99 ｱｱｽｽｽｾｑ	ｲゐ ｽｲ5ｽｽｚ	ｲゐ ｽｲ5ｽｽｚ

molex

a Æ3¥ıuÞŒ [!59{9! [95!{{Ða!¤{9! [.ha!b5tlb h-¤{I99¤

| ! {{9a . [Ð t! w¤ b- a . 9w | ! {{9a . [Ð t! w¤ b- a . 9w | /ha thb9b¤ ¤[9! w&(9b/9h C! b ! . , w0ª l! ¤thb lb5U! ¤9[¤[9 t w&(9b/9h C¤[! ¤/ha thb9b¤ ¤® | | | | . [h/Y95 ¤9ww lb! {{ /! ! Ù¤Þª Ù¤[! b- a . 9wlb5U! ¤9[. [h/Y95 ¤9ww lb! [t h{lu¤lb /! ! Ù¤Þª Ù¤[h- ¤! b- a . 9wlb5U! ¤9[ht9b ¤9ww lb! [t h{lu¤lb | | | |

molex

a Æ§¥ú¤Ø¢ [! 5 9 { 9 [95 ! { { Ða ! ¤ { 9 ! [
. h a ! b 5 t Ib h - ¤ { I 99 ¤

| ! { { 9a . [Ð 5 9 (/ wt ¤ Ib ¤ | ! { { 9a . [Ð t ! w ¤ b - a . 9w | / h a t h b 9b ¤ | | | | . [h / Y 95 ¤ 9w a Ib ! [{ | | | |

molex

a Æ3¾½µ¾Æ [!59{9! [95!{{Ða!¤{9! [.ha!b5tЏh-¤{I99¤

| !{{9a .ÐD5%(/wŁ¤h b-a.9w | !{{9a .[Ðt!w/ b-a.9w | /ha thb9b¤ | | |

molex

a Æ59¼ú¶æ [!59{9! [95!{{Ða!¤{9![.ha!b5tЏh-¤{I99¤

! {{9a . [Ð5%(/wŁ¤Ïh b- a . 9w	! {{9a . [Ð t ! w¤ b- a . 9w	/ha thb9b¤				. [h/Y95 ¤9ww Ib! {{												{¤! ¤- {	/ha a 9b¤{	ht¤Ïh b! [! ¤¤! ¤/1 a 9b¤{ {h[5 {9t 9w ¤9{Ð	
		¤[9 t w&(9b/9 h C! b ! . , w9Ł ll ¤Ïh Ib5Ł! ¤9[¤[9 t w&(9b/9 h C¤[! ¤ / ha thb9b¤ ®				/! ¹ Ł¤Þ¤ Ł¤[! b- a . 9w ib5Ł! ¤9[. [h/Y95 ¤9ww Ib! [t h{Ł¤Ïh /! ¹ Ł¤Þ¤ Ł¤[h- ¤! b- a . 9w ib5Ł! ¤9[ht9b ¤9ww Ib! [t h{Ł¤Ïh														
		I h- {Ïb D Y9Ð¼Ïh [hw	Dwha a 9¤ /! t	t[w	a ! ¤ {9[	ろ	わ	わ	ゑ	ゑ	を	ん	ラ	゛	ゕれ	ゖろ	ゖゐ			. ! /Y{I 9[[¤[wL {	. ! /Y{I 9[[¤[wL {
Y9Ð! ¤r[! /Y	ｱｱｽｽｽ5ｶﾀﾞ	! □[Y	D/t	t[w.	a ¤				ｄ	ｷ			ｰ		ｸﾞ	ｸﾞ	ｸﾞ	t{[bb95 h. {h[9(/9b/9	{99 ｱｱｽｽｽ5ｶﾀﾞ	ｲｶ ｽﾄﾚｰﾄ
Y9Ð! ¤r[! /Y	ｱｱｽｽｽ5ｶﾀﾞ	! □[Y	D/t	t[w.	a ¤	ｦ							ｰ		ｸﾞ			t{[bb95 h. {h[9(/9b/9	{99 ｱｱｽｽｽ5ｶﾀﾞ	ｲｶ ｽﾄﾚｰﾄ
Y9Ð! ¤r[! /Y	ｱｱｽｽｽ5ｶﾀﾞ	! □[Y	D/t	t[w.	a ¤							ｲ	ｰ				ｸﾞ	t{[bb95 h. {h[9(/9b/9	{99 ｱｱｽｽｽ5ｶﾀﾞ	ｲｶ ｽﾄﾚｰﾄ
Y9Ð/ ¤6] wˇDwl E	ｱｱｽｽｽ5ｶﾀﾞ	/ !5D	D/t	t[w.	a ¤			ｬ	ｄ				ｰ					t{[bb95 h. {h[9(/9b/9	{99 ｱｱｽｽｽ5ｶﾀﾞ	ｲｶ ｽﾄﾚｰﾄ
Y9Ð! ¤r[! /Y	ｱｱｽｽｽ5ｶﾀﾞ	! □[Y	D/t	t[w.	a ¤	ｦ	ｬ					ｲ	ｰ		ｸﾞ	ｸﾞ	ｸﾞ	t{[bb95 h. {h[9(/9b/9	{99 ｱｱｽｽｽ5ｶﾀﾞ	ｲｶ ｽﾄﾚｰﾄ
Y9Ð! ¤r[! /Y	ｱｱｽｽｽ5ｶﾀﾞ	! □[Y	D/t	t[w.	a ¤				ｷ			ｲ	ｰ					t{[bb95 h. {h[9(/9b/9	{99 ｱｱｽｽｽ5ｶﾀﾞ	ｲｶ ｽﾄﾚｰﾄ
Y9Ð! ¤r[! /Y	ｱｱｽｽｽ5ｶﾀﾞ	! □[Y	D/t	t[w.	a ¤	ｦ	ｬ								ｸﾞ	ｸﾞ	ｸﾞ	t{[bb95 h. {h[9(/9b/9	{99 ｱｱｽｽｽ5ｶﾀﾞ	ｲｶ ｽﾄﾚｰﾄ
Y9Ð! ¤r[! /Y	ｱｱｽｽｽ5ｶﾀﾞ	! □[Y	D/t	t[w.	a ¤			ｬ	ｄ									t{[bb95 h. {h[9(/9b/9	{99 ｱｱｽｽｽ5ｶﾀﾞ	ｲｶ ｽﾄﾚｰﾄ
Y9Ð! ¤r[! /Y	ｱｱｽｽｽ5ｶﾀﾞ	! □[Y	D/t	t[w.	a ¤	ｦ	ｬ		ｄ	ｷ					ｸﾞ	ｸﾞ	ｸﾞ	t{[bb95 h. {h[9(/9b/9	{99 ｱｱｽｽｽ5ｶﾀﾞ	ｲｶ ｽﾄﾚｰﾄ
Y9Ð! ¤r[! /Y	ｱｱｽｽｽ5ｶﾀﾞ	! □[Y	D/t	t[w.	a ¤					ｷ								t{[bb95 h. {h[9(/9b/9	{99 ｱｱｽｽｽ5ｶﾀﾞ	ｲｶ ｽﾄﾚｰﾄ
Y9Ð! ¤r[! /Y	ｱｱｽｽｽ5ｶﾀﾞ	! □[Y	D/t	t[w.	a ¤	ｦ	ｬ								ｸﾞ	ｸﾞ	ｸﾞ	t{[bb95 h. {h[9(/9b/9	{99 ｱｱｽｽｽ5ｶﾀﾞ	ｲｶ ｽﾄﾚｰﾄ
Y9Ð! ¤r[! /Y	ｱｱｽｽｽ5ｶﾀﾞ	! □[Y	D/t	t[w.	a ¤				ｷ									t{[bb95 h. {h[9(/9b/9	{99 ｱｱｽｽｽ5ｶﾀﾞ	ｲｶ ｽﾄﾚｰﾄ
Y9Ð! ¤r[! /Y	ｱｱｽｽｽ5ｶﾀﾞ	! □[Y	D/t	t[w.	a ¤	ｦ	ｬ								ｸﾞ	ｸﾞ	ｸﾞ	t{[bb95 h. {h[9(/9b/9	{99 ｱｱｽｽｽ5ｶﾀﾞ	ｲｶ ｽﾄﾚｰﾄ
Y9Ð! ¤r[! /Y	ｱｱｽｽｽ5ｶﾀﾞ	! □[Y	D/t	t[w.	a ¤				ｷ									t{[bb95 h. {h[9(/9b/9	{99 ｱｱｽｽｽ5ｶﾀﾞ	ｲｶ ｽﾄﾚｰﾄ
Y9Ð! ¤r[! /Y	ｱｱｽｽｽ5ｶﾀﾞ	! □[Y	D/t	t[w.	a ¤	ｦ	ｬ								ｸﾞ			t{[bb95 h. {h[9(/9b/9	{99 ｱｱｽｽｽ5ｶﾀﾞ	ｲｶ ｽﾄﾚｰﾄ
Y9Ð! ¤r[! /Y	ｱｱｽｽｽ5ｶﾀﾞ	! □[Y	D/t	t[w.	a ¤	ｦ			ｄ	ｷ					ｸﾞ	ｸﾞ	ｸﾞ	t{[bb95 h. {h[9(/9b/9	{99 ｱｱｽｽｽ5ｶﾀﾞ	ｲｶ ｽﾄﾚｰﾄ
Y9Ð! ¤r[! /Y	ｱｱｽｽｽ5ｶﾀﾞ	! □[Y	D/t	t[w.	a ¤	ｦ	ｬ								ｸﾞ			t{[bb95 h. {h[9(/9b/9	{99 ｱｱｽｽｽ5ｶﾀﾞ	ｲｶ ｽﾄﾚｰﾄ
Y9Ð! ¤r[! /Y	ｱｱｽｽｽ5ｶﾀﾞ	! □[Y	D/t	t[w.	a ¤			ｬ							ｸﾞ			t{[bb95 h. {h[9(/9b/9	{99 ｱｱｽｽｽ5ｶﾀﾞ	ｲｶ ｽﾄﾚｰﾄ
Y9Ð! ¤r[! /Y	ｱｱｽｽｽ5ｶﾀﾞ	! □[Y	D/t	t[w.	a ¤				ｷ						ｸﾞ			t{[bb95 h. {h[9(/9b/9	{99 ｱｱｽｽｽ5ｶﾀﾞ	ｲｶ ｽﾄﾚｰﾄ
Y9Ð! ¤r[! /Y	ｱｱｽｽｽ5ｶﾀﾞ	! □[Y	D/t	t[w.	a ¤										ｸﾞ			t{[bb95 h. {h[9(/9b/9	{99 ｱｱｽｽｽ5ｶﾀﾞ	ｲｶ ｽﾄﾚｰﾄ
Y9Ð! ¤r[! /Y	ｱｱｽｽｽ5ｶﾀﾞ	! □[Y	D/t	t[w.	a ¤			ｬ							ｸﾞ			t{[bb95 h. {h[9(/9b/9	{99 ｱｱｽｽｽ5ｶﾀﾞ	ｲｶ ｽﾄﾚｰﾄ
Y9Ð! ¤r[! /Y	ｱｱｽｽｽ5ｶﾀﾞ	! □[Y	D/t	t[w.	a ¤				ｷ						ｸﾞ			t{[bb95 h. {h[9(/9b/9	{99 ｱｱｽｽｽ5ｶﾀﾞ	ｲｶ ｽﾄﾚｰﾄ
Y9Ð! ¤r[! /Y	ｱｱｽｽｽ5ｶﾀﾞ	! □[Y	D/t	t[w.	a ¤													t{[bb95 h. {h[9(/9b/9	{99 ｱｱｽｽｽ5ｶﾀﾞ	ｲｶ ｽﾄﾚｰﾄ
Y9Ð! ¤r[! /Y	ｱｱｽｽｽ5ｶﾀﾞ	! □[Y	D/t	t[w.	a ¤				ｄ									t{[bb95 h. {h[9(/9b/9	{99 ｱｱｽｽｽ5ｶﾀﾞ	ｲｶ ｽﾄﾚｰﾄ
Y9Ð! ¤r[! /Y	ｱｱｽｽｽ5ｶﾀﾞ	! □[Y	D/t	t[w.	a ¤													t{[bb95 h. {h[9(/9b/9	{99 ｱｱｽｽｽ5ｶﾀﾞ	ｲｶ ｽﾄﾚｰﾄ
Y9Ð! ¤r[! /Y	ｱｱｽｽｽ5ｶﾀﾞ	! □[Y	D/t	t[w.	a ¤	ｦ	ｬ		ｄ	ｷ			ｰ		ｸﾞ			t{[bb95 h. {h[9(/9b/9	{99 ｱｱｽｽｽ5ｶﾀﾞ	ｲｶ ｽﾄﾚｰﾄ
Y9Ð! ¤r[! /Y	ｱｱｽｽｽ5ｶﾀﾞ	! □[Y	D/t	t[w.	a ¤													{! [9[. [9		ｲｶ ｽﾄﾚｰﾄ
Y9Ð. ¤[ID[¤ Dwl E	ｱｱｽｽｽ5ｶﾀﾞ	. [ID	D/t	t[w.	a ¤													{! [9[. [9		ｲｶ ｽﾄﾚｰﾄ
Y9Ð! ¤r[! /Y	ｱｱｽｽｽ5ｶﾀﾞ	! □[Y	D/t	t[w.	a ¤	ｦ												bh¤vØ/ha a 9b595	{99 ｱｱｽｽｽ5ｶﾀﾞ	ｲｶ ｽﾄﾚｰﾄ
Y9Ð. ¤[ID[¤ Dwl E	ｱｱｽｽｽ5ｶﾀﾞ	. [ID	D/t	t[w.	a ¤													bh¤vØ/ha a 9b595	{99 ｱｱｽｽｽ5ｶﾀﾞ	ｲｶ ｽﾄﾚｰﾄ
Y9Ð/ ¤r¤vh* b	ｱｱｽｽｽ5ｶﾀﾞ	/ □¤	D/t	t[w.	a ¤													bh¤vØ/ha a 9b595		ｲｶ ｽﾄﾚｰﾄ
Y9Ð5¤Dv99b	ｱｱｽｽｽ5ｶﾀﾞ	5 !Dw.	D/t	t[w.	a ¤													bh¤vØ/ha a 9b595		ｲｶ ｽﾄﾚｰﾄ
¹ h!S Y9E	ｱｱｽｽｽ5ｶﾀﾞ																				
Y9Ð! ¤r[! /Y	ｱｱｽｽｽ5ｶﾀﾞ	! □[Y	D/t	t[w.	a ¤													{! [9[. [9		ｲｶ ｽﾄﾚｰﾄ
Y9Ð. ¤[ID[¤ Dwl E	ｱｱｽｽｽ5ｶﾀﾞ	. [ID	D/t	t[w.	a ¤													{! [9[. [9		ｲｶ ｽﾄﾚｰﾄ
Y9Ð/ ¤r¤vh* b	ｱｱｽｽｽ5ｶﾀﾞ	/ □¤	D/t	t[w.	a ¤													bh¤vØ/ha a 9b595		ｲｶ ｽﾄﾚｰﾄ
Y9Ð5¤Dv99b	ｱｱｽｽｽ5ｶﾀﾞ	5 !Dw.	D/t	t[w.	a ¤													bh¤vØ/ha a 9b595		ｲｶ ｽﾄﾚｰﾄ
¹ h!S Y9E	ｱｱｽｽｽ5ｶﾀﾞ																				
Y9Ð! ¤r[! /Y	ｱｱｽｽｽ5ｶﾀﾞ	! □[Y	D/t	t[w.	a ¤													{! [9[. [9		ｲｶ ｽﾄﾚｰﾄ
Y9Ð. ¤[ID[¤ Dwl E	ｱｱｽｽｽ5ｶﾀﾞ	. [ID	D/t	t[w.	a ¤													{! [9[. [9		ｲｶ ｽﾄﾚｰﾄ
Y9Ð/ ¤r¤vh* b	ｱｱｽｽｽ5ｶﾀﾞ	/ □¤	D/t	t[w.	a ¤													bh¤vØ/ha a 9b595		ｲｶ ｽﾄﾚｰﾄ
Y9Ð5¤Dv99b	ｱｱｽｽｽ5ｶﾀﾞ	5 !Dw.	D/t	t[w.	a ¤													bh¤vØ/ha a 9b595		ｲｶ ｽﾄﾚｰﾄ
¹ h!S Y9E	ｱｱｽｽｽ5ｶﾀﾞ																				
Y9Ð! ¤r[! /Y	ｱｱｽｽｽ5ｶﾀﾞ	! □[Y	D/t	t[w.	a ¤													{! [9[. [9		ｲｶ ｽﾄﾚｰﾄ
Y9Ð. ¤[ID[¤ Dwl E	ｱｱｽｽｽ5ｶﾀﾞ	. [ID	D/t	t[w.	a ¤													{! [9[. [9		ｲｶ ｽﾄﾚｰﾄ
Y9Ð/ ¤r¤vh* b	ｱｱｽｽｽ5ｶﾀﾞ	/ □¤	D/t	t[w.	a ¤													bh¤vØ/ha a 9b595		ｲｶ ｽﾄﾚｰﾄ
Y9Ð5¤Dv99b	ｱｱｽｽｽ5ｶﾀﾞ	5 !Dw.	D/t	t[w.	a ¤													bh¤vØ/ha a 9b595		ｲｶ ｽﾄﾚｰﾄ
¹ h!S Y9E	ｱｱｽｽｽ5ｶﾀﾞ																				
Y9Ð! ¤r[! /Y	ｱｱｽｽｽ5ｶﾀﾞ	! □[Y	D/t	t[w.	a ¤													{! [9[. [9		ｲｶ ｽﾄﾚｰﾄ
Y9Ð. ¤[ID[¤ Dwl E	ｱｱｽｽｽ5ｶﾀﾞ	. [ID	D/t	t[w.	a ¤													{! [9[. [9		ｲｶ ｽﾄﾚｰﾄ
Y9Ð/ ¤r¤vh* b	ｱｱｽｽｽ5ｶﾀﾞ	/ □¤	D/t	t[w.	a ¤													bh¤vØ/ha a 9b595		ｲｶ ｽﾄﾚｰﾄ
Y9Ð5¤Dv99b	ｱｱｽｽｽ5ｶﾀﾞ	5 !Dw.	D/t	t[w.	a ¤													bh¤vØ/ha a 9b595		ｲｶ ｽﾄﾚｰﾄ
¹ h!S Y9E	ｱｱｽｽｽ5ｶﾀﾞ																				
Y9Ð! ¤r[! /Y	ｱｱｽｽｽ5ｶﾀﾞ	! □[Y	D/t	t[w.	a ¤													{! [9[. [9		ｲｶ ｽﾄﾚｰﾄ
Y9Ð. ¤[ID[¤ Dwl E	ｱｱｽｽｽ5ｶﾀﾞ	. [ID	D/t	t[w.	a ¤													{! [9[. [9		ｲｶ ｽﾄﾚｰﾄ
Y9Ð/ ¤r¤vh* b	ｱｱｽｽｽ5ｶﾀﾞ	/ □¤	D/t	t[w.	a ¤													bh¤vØ/ha a 9b595		ｲｶ ｽﾄﾚｰﾄ
Y9Ð5¤Dv99b	ｱｱｽｽｽ5ｶﾀﾞ	5 !Dw.	D/t	t[w.	a ¤													bh¤vØ/ha a 9b595		ｲｶ ｽﾄﾚｰﾄ
¹ h!S Y9E	ｱｱｽｽｽ5ｶﾀﾞ																				
Y9Ð! ¤r[! /Y	ｱｱｽｽｽ5ｶﾀﾞ	! □[Y	D/t	t[w.	a ¤													{! [9[. [9		ｲｶ ｽﾄﾚｰﾄ
Y9Ð! ¤r[! /Y	ｱｱｽｽｽ5ｶﾀﾞ	! □[Y	D/t	t[w.	a ¤													{! [9[. [9		ｲｶ ｽﾄﾚｰﾄ

9/b bh ¤Ø/ha a 9b595
5! ¤ゎ-ぎ!Ø¤vh* b ｲｶ

5h/ - a 9b¤ bh ¤t5 ｱｱｽｽｽ5ｶﾀﾞ ｲｶ

w6² L{Ïh d¤ ! ぎ7
t ! D9-¤ぎ!Ø¤ C ¤h¿

molex

a Æ3¾½µ¾Æ±¸ [! 59{9! [95 ! {{Ða ! ¤{9! [. ha ! b5 t⊞h- ¤{I 99¤

! {{9a . [Ð t ! w¤ b- a . 9w	! {{9a . [Ð t ! w¤ b- a . 9w	/ha thb9b¤ ¤[9 t w9(9b/9h C! b ! . , w9° ⊞ ¤⊞h ⊞b5U! ¤9[¤[9 t w9(9b/9h C¤[! ¤ /ha thb9b¤⊞					. [h/Y95 ¤9ww ⊞b! {{ / ! ' ⊞Þ° ⊞! ! b- a . 9w⊞b5U! ¤9[. [h/Y95 ¤9ww ⊞b! [t h{⊞h⊞b / ! ' ⊞Þ° ⊞! h- ¤ ! b- a . 9w⊞b5U! ¤9[ht 9b ¤9ww ⊞b! [t h{⊞h⊞b									{¤[¤- {	/ha a 9b¤{	ht⊞h⊞! [! ¤¤[¤/1 a 9b¤{ h[5 {9t 9w ¤9[Ð	
		I h- {⊞D Y9Ð⊞h [hw	Dwha a 9¤ / ! t	t [w	a ! ¤ {9! [	ろ	わ	わ	ゑ	ゑ	を	ん	ッ	・	ヨれ	ヅゐ	ヺゐ	. ! / Y[9[[° ⊞! w¿ {	. ! / Y[9[[° ⊞! h- ¤ w¿ {				
Y9Ð ¤r [! /Y	ｱｱｽｽｼｼﾀﾀｲｲ	! □[Y	Ð/t	t [w	a □						₹	ｲ							{{ [9[. [9		ｱ⊞ ｽ¤ｼｼｯｯ	ｱ⊞ ｽ¤ｼｼｯｯ
Y9Ð ¤r [! /Y	ｱｱｽｽｼｼﾀﾀｲｲ	! □[Y	Ð/t	t [w	a □		ｧ	ｧ	ｬ		₹	ｲ	ｰ		ヲ	ヌ			{{ [9[. [9		ｱ⊞ ｽ¤ｼｼｯｯ	ｱ⊞ ｽ¤ｼｼｯｯ
Y9Ð. ⊣[Ð[¤ Ðw⊞ E	ｱｱｽｽｼｼﾀﾀｲｲ	. [Ð	Ð/t	t [w	a □	ｦ			ｷ		₹	ｲ	ｰ		ヲ				{{ [9[. [9		ｱ⊞ ｽ¤ｼｼｯｯ	ｱ⊞ ｽ¤ｼｼｯｯ
Y9Ð ¤r [! /Y	ｱｱｽｽｼｼﾀﾀｲｲ	! □[Y	Ð/t	t [w	a □		ｧ												{{ [9[. [9		ｱ⊞ ｽ¤ｼｼｯｯ	ｱ⊞ ｽ¤ｼｼｯｯ
Y9Ð. ⊣[Ð[¤ Ðw⊞ E	ｱｱｽｽｼｼﾀﾀｲｲ	. [Ð	Ð/t	t [w	a □		ｧ								ヲ				{{ [9[. [9		ｱ⊞ ｽ¤ｼｼｯｯ	ｱ⊞ ｽ¤ｼｼｯｯ
Y9Ð ¤r [! /Y	ｱｱｽｽｼｼﾀﾀｲｲ	! □[Y	Ð/t	t [w	a □	ｦ			ｷ	ｷ	₹	ｲ	ｰ						{{ [9[. [9		ｱ⊞ ｽ¤ｼｼｯｯ	ｱ⊞ ｽ¤ｼｼｯｯ
Y9Ð ¤r [! /Y	ｱｱｽｽｼｼﾀﾀｲｲ	! □[Y	Ð/t	t [w	a □		ｧ	ｧ					ｰ		ヲ	ヌ			{{ [9[. [9		ｱ⊞ ｽ¤ｼｼｯｯ	ｱ⊞ ｽ¤ｼｼｯｯ
Y9Ð ¤r [! /Y	ｱｱｽｽｼｼﾀﾀｲｲ	! □[Y	Ð/t	t [w	a □						ｲ	ｰ							{{ [9[. [9		ｱ⊞ ｽ¤ｼｼｯｯ	ｱ⊞ ｽ¤ｼｼｯｯ
Y9Ð ¤r [! /Y	ｱｱｽｽｼｼﾀﾀｲｲ	! □[Y	Ð/t	t [w	a □		ｧ						ｰ		ヲ	ヌ			{{ [9[. [9		ｱ⊞ ｽ¤ｼｼｯｯ	ｱ⊞ ｽ¤ｼｼｯｯ
Y9Ð ¤r [! /Y	ｱｱｽｽｼｼﾀﾀｲｲ	! □[Y	Ð/t	t [w	a □			ｷ											{{ [9[. [9		ｱ⊞ ｽ¤ｼｼｯｯ	ｱ⊞ ｽ¤ｼｼｯｯ
Y9Ð ¤r [! /Y	ｱｱｽｽｼｼﾀﾀｲｲ	! □[Y	Ð/t	t [w	a □														{{ [9[. [9		ｱ⊞ ｽ¤ｼｼｯｯ	ｱ⊞ ｽ¤ｼｼｯｯ
Y9Ð ¤r [! /Y	ｱｱｽｽｼｼﾀﾀｲｲ	! □[Y	Ð/t	t [w	a □		ｧ								ヲ				{{ [9[. [9		ｱ⊞ ｽ¤ｼｼｯｯ	ｱ⊞ ｽ¤ｼｼｯｯ
Y9Ð ¤r [! /Y	ｱｱｽｽｼｼﾀﾀｲｲ	! □[Y	Ð/t	t [w	a □			ｷ											{{ [9[. [9		ｱ⊞ ｽ¤ｼｼｯｯ	ｱ⊞ ｽ¤ｼｼｯｯ
Y9Ð ¤r [! /Y	ｱｱｽｽｼｼﾀﾀｲｲ	! □[Y	Ð/t	t [w	a □														{{ [9[. [9		ｱ⊞ ｽ¤ｼｼｯｯ	ｱ⊞ ｽ¤ｼｼｯｯ
Y9Ð ¤r [! /Y	ｱｱｽｽｼｼﾀﾀｲｲ	! □[Y	Ð/t	t [w	a □		ｧ	ｧ							ヲ				{{ [9[. [9		ｱ⊞ ｽ¤ｼｼｯｯ	ｱ⊞ ｽ¤ｼｼｯｯ
Y9Ð ¤r [! /Y	ｱｱｽｽｼｼﾀﾀｲｲ	! □[Y	Ð/t	t [w	a □			ｷ											{{ [9[. [9		ｱ⊞ ｽ¤ｼｼｯｯ	ｱ⊞ ｽ¤ｼｼｯｯ
Y9Ð ¤r [! /Y	ｱｱｽｽｼｼﾀﾀｲｲ	! □[Y	Ð/t	t [w	a □														{{ [9[. [9		ｱ⊞ ｽ¤ｼｼｯｯ	ｱ⊞ ｽ¤ｼｼｯｯ
Y9Ð ¤r [! /Y	ｱｱｽｽｼｼﾀﾀｲｲ	! □[Y	Ð/t	t [w	a □		ｧ								ヲ				{{ [9[. [9		ｱ⊞ ｽ¤ｼｼｯｯ	ｱ⊞ ｽ¤ｼｼｯｯ
Y9Ð ¤r [! /Y	ｱｱｽｽｼｼﾀﾀｲｲ	! □[Y	Ð/t	t [w	a □			ｷ											{{ [9[. [9		ｱ⊞ ｽ¤ｼｼｯｯ	ｱ⊞ ｽ¤ｼｼｯｯ
Y9Ð ¤r [! /Y	ｱｱｽｽｼｼﾀﾀｲｲ	! □[Y	Ð/t	t [w	a □														{{ [9[. [9		ｱ⊞ ｽ¤ｼｼｯｯ	ｱ⊞ ｽ¤ｼｼｯｯ
Y9Ð ¤r [! /Y	ｱｱｽｽｼｼﾀﾀｲｲ	! □[Y	Ð/t	t [w	a □		ｧ	ｧ

molex

a Æ§¥µ¶Ø¢£ [! 59{9! [95 ! {{Ða ! ¤{9! [. ha ! b5 t‰ h- ¤{I 99¤

! {{9a . [Ð5%(/ wŁ ¤‰h b- a . %w	! {{9a . [Ð t ! w•	/ ha t hb5‰¤				. [h / Y95 ¤9ww ‰b! {{															{¤! ¤- (	/ ha a 9b¤(	ht ¤‰h ! [! ¤¤! ¤/ I a 9b¤({h[5 {9t %w ¤9{Ð	
		¤[9 t w9(9b / 9 h C ! b ! . , w9! Ł ¤‰h ‰b5Ł! ¤9[¤[9 t w9(9b / 9 h C¤[! ¤ / ha t hb5‰¤				/ ! ¹ Ł¤9° ł¤[! b- a . 9wŁb5Ł! ¤9[. [h / Y95 ¤9ww ‰b! [t h{Ł¤‰h / ! ¹ Ł¤9° ł¤[h- ¤! b- a . 9wŁb5Ł! ¤9[ht %b ¤9ww ‰b! [t h{Ł¤‰h																						
		I h- {‰D Y9Ð¥‰h [hw	Dwha a 9¤ / ! t	t [w	a ! ¤ {9[	ろ	わ	わ	ゐ	ゑ	を	ん	ヲ	･	ヹわ	ヺゐ	ヺゑ	ヺを														
Y9Ð ¤r [! / Y	ｱｱｺｺｻｻｱ	! ‰[Y	Ð / t	t [w	a ⊡	ｦ	ｨ	ｬ	ｫ	ｮ		ｱ	ｯ																			{{ [9! . [9		‰ ｽｽ ﾋｳｳ	‰ ｽｽ ﾋｳｳｯ
Y9Ð ¤r [! / Y	ｱｱｺｺｻｻｲ	! ‰[Y	Ð / t	t [w	a ⊡							ｱ	ｯ			ｳｦ	ﾇｦ	ﾋｦ														{{ [9! . [9		‰ ｽｽ ﾋｳｳ	‰ ｽｽ ﾋｳｳｯ
Y9Ð ¤r [! / Y	ｱｱｺｺｻｻｳ	! ‰[Y	Ð / t	t [w	a ⊡	ｦ							ｯ			ｳｦ	ﾇｦ	ﾋｦ														{{ [9! . [9		‰ ｽｽ ﾋｳｳ	‰ ｽｽ ﾋｳｳｯ
Y9Ð ¤r [! / Y	ｱｱｺｺｻｻｴ	! ‰[Y	Ð / t	t [w	a ⊡		ｨ		ｬ							ｳｦ	ﾇｦ	ﾋｦ														{{ [9! . [9		‰ ｽｽ ﾋｳｳ	‰ ｽｽ ﾋｳｳｯ
Y9Ð ¤r [! / Y	ｱｱｺｺｻｻｵ	! ‰[Y	Ð / t	t [w	a ⊡	ｦ																										{{ [9! . [9		‰ ｽｽ ﾋｳｳ	‰ ｽｽ ﾋｳｳｯ
Y9Ð ¤r [! / Y	ｱｱｺｺｻｻｶ	! ‰[Y	Ð / t	t [w	a ⊡			ｦ	ｬ	ｫ																						{{ [9! . [9		‰ ｽｽ ﾋｳｳ	‰ ｽｽ ﾋｳｳｯ
Y9Ð ¤r [! / Y	ｱｱｺｺｻｻｷ	! ‰[Y	Ð / t	t [w	a ⊡			ｦ	ｬ	ｫ																						{{ [9! . [9		‰ ｽｽ ﾋｳｳ	‰ ｽｽ ﾋｳｳｯ
Y9Ð ¤r [! / Y	ｱｱｺｺｻｻｸ	! ‰[Y	Ð / t	t [w	a ⊡				ｬ																							{{ [9! . [9		‰ ｽｽ ﾋｳｳ	‰ ｽｽ ﾋｳｳｯ
Y9Ð ¤r [! / Y	ｱｱｺｺｻｻｹ	! ‰[Y	Ð / t	t [w	a ⊡					ｫ																						{{ [9! . [9		‰ ｽｽ ﾋｳｳ	‰ ｽｽ ﾋｳｳｯ
Y9Ð ¤r [! / Y	ｱｱｺｺｻｻｺ	! ‰[Y	Ð / t	t [w	a ⊡	ｦ	ｨ																									{{ [9! . [9		‰ ｽｽ ﾋｳｳ	‰ ｽｽ ﾋｳｳｯ
Y9Ð ¤r [! / Y	ｱｱｺｺｻｻｻ	! ‰[Y	Ð / t	t [w	a ⊡	ｦ	ｨ	ｬ	ｫ	ｬ	ｮ	ｱ	ｯ																			{{ [9! . [9		‰ ｽｽ ﾋｳｳ	‰ ｽｽ ﾋｳｳｯ
Y9Ð ¤r [! / Y	ｱｱｺｺｻｻｼ	! ‰[Y	Ð / t	t [w	a ⊡	ｦ	ｨ	ｬ	ｫ	ｬ	ｮ	ｱ	ｯ																			{{ [9! . [9		‰ ｽｽ ﾋｳｳ	‰ ｽｽ ﾋｳｳｯ
Y9Ð ¤r [! / Y	ｱｱｺｺｻｻｽ	! ‰[Y	Ð / t	t [w	a ⊡																											{{ [9! . [9		‰ ｽｽ ﾋｳｳ	‰ ｽｽ ﾋｳｳｯ
Y9Ð ¤r [! / Y	ｱｱｺｺｻｻｾ	! ‰[Y	Ð / t	t [w	a ⊡																											{{ [9! . [9		‰ ｽｽ ﾋｳｳ	‰ ｽｽ ﾋｳｳｯ
Y9Ð ¤r [! / Y	ｱｱｺｺｻｻｿ	! ‰[Y	Ð / t	t [w	a ⊡																											{{ [9! . [9		‰ ｽｽ ﾋｳｳ	‰ ｽｽ ﾋｳｳｯ
Y9Ð ¤r [! / Y	ｱｱｺｺｻｻﾀ	! ‰[Y	Ð / t	t [w	a ⊡																											{{ [9! . [9		‰ ｽｽ ﾋｳｳ	‰ ｽｽ ﾋｳｳｯ
Y9Ð ¤r [! / Y	ｱｱｺｺｻｻﾁ	! ‰[Y	Ð / t	t [w	a ⊡																											{{ [9! . [9		‰ ｽｽ ﾋｳｳ	‰ ｽｽ ﾋｳｳｯ
Y9Ð ¤r [! / Y	ｱｱｺｺｻｻﾂ	! ‰[Y	Ð / t	t [w	a ⊡																											{{ [9! . [9		‰ ｽｽ ﾋｳｳ	‰ ｽｽ ﾋｳｳｯ
Y9Ð ¤r [! / Y	ｱｱｺｺｻｻﾃ	! ‰[Y	Ð / t	t [w	a ⊡																											{{ [9! . [9		‰ ｽｽ ﾋｳｳ	‰ ｽｽ ﾋｳｳｯ
Y9Ð ¤r [! / Y	ｱｱｺｺｻｻﾄ	! ‰[Y	Ð / t	t [w	a ⊡																											{{ [9! . [9		‰ ｽｽ ﾋｳｳ	‰ ｽｽ ﾋｳｳｯ
Y9Ð ¤r [! / Y	ｱｱｺｺｻｻﾅ	! ‰[Y	Ð / t	t [w	a ⊡																											{{ [9! . [9		‰ ｽｽ ﾋｳｳ	‰ ｽｽ ﾋｳｳｯ
Y9Ð ¤r [! / Y	ｱｱｺｺｻｻﾆ	! ‰[Y	Ð / t	t [w	a ⊡																											{{ [9! . [9		‰ ｽｽ ﾋｳｳ	‰ ｽｽ ﾋｳｳｯ
Y9Ð ¤r [! / Y	ｱｱｺｺｻｻﾇ	! ‰[Y	Ð / t	t [w	a ⊡																											{{ [9! . [9		‰ ｽｽ ﾋｳｳ	‰ ｽｽ ﾋｳｳｯ
Y9Ð ¤r [! / Y	ｱｱｺｺｻｻﾈ	! ‰[Y	Ð / t	t [w	a ⊡																											{{ [9! . [9		‰ ｽｽ ﾋｳｳ	‰ ｽｽ ﾋｳｳｯ
Y9Ð ¤r [! / Y	ｱｱｺｺｻｻﾉ	! ‰[Y	Ð / t	t [w	a ⊡																											{{ [9! . [9		‰ ｽｽ ﾋｳｳ	‰ ｽｽ ﾋｳｳｯ
Y9Ð ¤r [! / Y	ｱｱｺｺｻｻﾊ	! ‰[Y	Ð / t	t [w	a ⊡																											{{ [9! . [9		‰ ｽｽ ﾋｳｳ	‰ ｽｽ ﾋｳｳｯ
Y9Ð ¤r [! / Y	ｱｱｺｺｻｻﾋ	! ‰[Y	Ð / t	t [w	a ⊡																											{{ [9! . [9		‰ ｽｽ ﾋｳｳ	‰ ｽｽ ﾋｳｳｯ
Y9Ð ¤r [! / Y	ｱｱｺｺｻｻﾌ	! ‰[Y	Ð / t	t [w	a ⊡																											{{ [9! . [9		‰ ｽｽ ﾋｳｳ	‰ ｽｽ ﾋｳｳｯ
Y9Ð ¤r [! / Y	ｱｱｺｺｻｻﾍ	! ‰[Y	Ð / t	t [w	a ⊡																											{{ [9! . [9		‰ ｽｽ ﾋｳｳ	‰ ｽｽ ﾋｳｳｯ
Y9Ð ¤r [! / Y	ｱｱｺｺｻｻﾎ	! ‰[Y	Ð / t	t [w	a ⊡																											{{ [9! . [9		‰ ｽｽ ﾋｳｳ	‰ ｽｽ ﾋｳｳｯ
Y9Ð ¤r [! / Y	ｱｱｺｺｻｻﾏ	! ‰[Y	Ð / t	t [w	a ⊡																											{{ [9! . [9		‰ ｽｽ ﾋｳｳ	‰ ｽｽ ﾋｳｳｯ
Y9Ð ¤r [! / Y	ｱｱｺｺｻｻﾐ	! ‰[Y	Ð / t	t [w	a ⊡																											{{ [9! . [9		‰ ｽｽ ﾋｳｳ	‰ ｽｽ ﾋｳｳｯ
Y9Ð ¤r [! / Y	ｱｱｺｺｻｻﾑ	! ‰[Y	Ð / t	t [w	a ⊡																											{{ [9! . [9		‰ ｽｽ ﾋｳｳ	‰ ｽｽ ﾋｳｳｯ
Y9Ð ¤r [! / Y	ｱｱｺｺｻｻﾒ	! ‰[Y	Ð / t	t [w	a ⊡																											{{ [9! . [9		‰ ｽｽ ﾋｳｳ	‰ ｽｽ ﾋｳｳｯ
Y9Ð ¤r [! / Y	ｱｱｺｺｻｻﾓ	! ‰[Y	Ð / t	t [w	a ⊡																											{{ [9! . [9		‰ ｽｽ ﾋｳｳ	‰ ｽｽ ﾋｳｳｯ
Y9Ð ¤r [! / Y	ｱｱｺｺｻｻﾔ	! ‰[Y	Ð / t	t [w	a ⊡																											{{ [9! . [9		‰ ｽｽ ﾋｳｳ	‰ ｽｽ ﾋｳｳｯ
Y9Ð ¤r [! / Y	ｱｱｺｺｻｻﾕ	! ‰[Y	Ð / t	t [w	a ⊡																											{{ [9! . [9		‰ ｽｽ ﾋｳｳ	‰ ｽｽ ﾋｳｳｯ
Y9Ð ¤r [! / Y	ｱｱｺｺｻｻﾖ	! ‰[Y	Ð / t	t [w	a ⊡																											{{ [9! . [9		‰ ｽｽ ﾋｳｳ	‰ ｽｽ ﾋｳｳｯ
Y9Ð ¤r [! / Y	ｱｱｺｺｻｻﾗ	! ‰[Y	Ð / t	t [w	a ⊡																											{{ [9! . [9		‰ ｽｽ ﾋｳｳ	‰ ｽｽ ﾋｳｳｯ
Y9Ð ¤r [! / Y	ｱｱｺｺｻｻﾘ	! ‰[Y	Ð / t	t [w	a ⊡																											{{ [9! . [9		‰ ｽｽ ﾋｳｳ	‰ ｽｽ ﾋｳｳｯ
Y9Ð ¤r [! / Y	ｱｱｺｺｻｻﾙ	! ‰[Y	Ð / t	t [w	a ⊡																											{{ [9! . [9		‰ ｽｽ ﾋｳｳ	‰ ｽｽ ﾋｳｳｯ
Y9Ð ¤r [! / Y	ｱｱｺｺｻｻﾚ	! ‰[Y	Ð / t	t [w	a ⊡																											{{ [9! . [9		‰ ｽｽ ﾋｳｳ	‰ ｽｽ ﾋｳｳｯ
Y9Ð ¤r [! / Y	ｱｱｺｺｻｻﾛ	! ‰[Y	Ð / t	t [w	a ⊡																											{{ [9! . [9		‰ ｽｽ ﾋｳｳ	‰ ｽｽ ﾋｳｳｯ
Y9Ð ¤r [! / Y	ｱｱｺｺｻｻﾜ	! ‰[Y	Ð / t	t [w	a ⊡																											{{ [9! . [9		‰ ｽｽ ﾋｳｳ	‰ ｽｽ ﾋｳｳｯ
Y9Ð ¤r [! / Y	ｱｱｺｺｻｻｦ	! ‰[Y	Ð / t	t [w	a ⊡																											{{ [9! . [9		‰ ｽｽ ﾋｳｳ	‰ ｽｽ ﾋｳｳｯ
Y9Ð ¤r [! / Y	ｱｱｺｺｻｻﾝ	! ‰[Y	Ð / t	t [w	a ⊡																											{{ [9! . [9		‰ ｽｽ ﾋｳｳ	‰ ｽｽ ﾋｳｳｯ

molex

a Æ§¥µ¶Ø£¢ [! 59{9! [95 ! {{Ða ! ¤{9! [. ha ! b5 t‰ h- ¤{I 99¤

| ! {{9a . [Ð t ! w¤ b- a . 9w | /ha thb9b¤ | | |

molex

a A[redacted] [! 5 9 { 9 ! [95 ! { { Đa ! ¤ { 9 ! [
. h a ! b 5 t ŀb h- ¤ { I 99 ¤

| ! { { 9a . [Đ 5 9 (/ wŁ ¤ ŀb h b- a . 9w | / h a t h b 5 b ¤ | | | | | . [h / Y 9 5 ¤ 9 w a ŀb ! [{ | | | | |

molex

a Æ5¥kuÞ5 [! 59{9[95] ! {{Ða ! ¤{9[[
. ha ! b5 t b h - ¤ {! 99¤

! ; . w Æ E ¤ h b	5 9 [¤ k a b]	/ h [! ¤ w	a ! ¤ ¥ w k [
! ' [E Y	! h - { b D ¥ 9 K b D ! ¤ t ¤ h b !	. [! / Y	{ t ! & ¤ [! h b D C ¤ f
. [D	! h - { b D ¥ 9 K b D ! ¤ t ¤ h b .	[E X ¤ D w E	{ t ! & ¤ [! h b D C ¤ f
/ ! ; ¤	! h - { b D ¥ 9 K b D ! ¤ t ¤ h b /	v h ' b	{ t ! & ¤ [! h b D C ¤ f
5 ! D ¤ k	! h - { b D ¥ 9 K b D ! ¤ t ¤ h b 5	D w X b	{ t ! & ¤ [! h b D C ¤ f
/ 5 D	! h - { b D ¥ 9 K b D ! ¤ t ¤ h b /	5 ! w ' D w E	{ t ! & ¤ [! h b D C ¤ f
5 ! E D	! h - { b D ¥ 9 K b D ! ¤ t ¤ h b 5	¤ h b 9 D w E	{ t ! & ¤ [! h b D C ¤ f
! ' 9 ¥	! h - { b D ¥ 9 K b D ! ¤ t ¤ h b !	6 k [! h '	{ t ! & ¤ [! h b D C ¤ f
D ! t	D w h a a 9 ¥ ! ! t ! - D O 9 5 .	. [! / Y	{ t ! & ¤ [! h b D C ¤ f
t ! ¤ k	t ! ¤ k	b ! ¤ = w [	{ b ! 5 w B ¤ [0 [. . w ! ¤ 9 5 { E ! u ! h b 9
a ! ¤ k	a ! ¤ ¥ [9 [	w ¤ ! ¤ w B 5	{ b ! 5 w B ¤ [0 [. . w ! ¤ 9 5 { E ! u ! h b 9
a ¤ ¤	a ! ¤ ¥ [9 [	w h ¤ [. [. 9	{ b ! 5 w B ¤ [0 [. . w ! ¤ 9 5 { E ! u ! h b 9

Ow! 5 5 ¤ h b ! [! b O w ! ¤ ! h b (9 9 { 5 : ¤ ¥ ¥ ¥ ¥ ¥ ¥ ¥ ¥

| ! { { ¥ a . [D 5 9 [/ w k ¤ ! h b | ! { { ¥ a . [D ! ! w b - a . ¥ w | ¤ [9 ¥ w k (¥ b ! 9 h ! C ! b ! . . w ! ¤ ! h b ! b 5 ! ¤ [¤ [9 ! w k ¤ ! h b ! b ¤ h w ! ¤ ! t ¤ h b ¤ h w ¤ ¤ | . [h / ! 9 5 ¤ ¥ w a ! b ! [{ ! ! ' ! b ¤ ! ! b - a . ¥ w b 5 ! ¤ [. [h / ! 9 5 ¤ ¥ w a ! b ! [{ ! h (! b ! h ! ! ' ! b ¤ ! b ! h - ¤ ! b - a . ¥ w b 5 ! ¤ [! h ! b ¤ h w ¤ ¥ w a ! b ! [{ ! h (! b ! h | | |

molex

a ƀ₹₴₭ıнƀ₹ [! 59 { 9[[95] {{ Đa ! ¤ { 9[[
. ha ! b5 t b h - ¤ {! 99 ¤

| ! {{ 9a _ [D2 ! wr b - a . 9w | /ha t hb9b¤ | | |

molex

a ⁄€$¥‰¼₹£ [! 59{9[[95] ! {{Ða ! ¤ {9[[
. ha ! b5 t b h - ¤ {1 99 ¤

| ! {{9a . [D5(9[/ wd ¤b\b h | /ha t hb¶b¤ | ;h/ Y95 ×9wa \b! [[| | |

molex

a ÆÇÐ¥µ¾Ê¡ [! 59 { 9[[95] ! { { Ða ! ¤ { 9[[
. ha ! b5 t b h - ¤ { 199 ¤

| ! {{9a _ [D1! wr b- a . 9w | /ha t hb9b= | ¤[9t w9[9b/9h<l b ! . , w¢P E =bh b5\U ! =9[=t 9 t =w9[9b/9h<l ! =/ha t hb9b=¤ | :h/Y95 =9wa ib! [{ | | (=t = - { | /ha a 9b=t | ht =b:b[! ! =nt =/ l a 9b=t [h[5 [9t 9w] =9[Ð | | | |
|---|---|---

molex

a /ɛ₴₴ʁ\ıʁ₴; [! 59 { 9[59 ! {{ Ð a ! ¤ { 9[ ] . ha ! b5 t b h - ¤ {1 99 ¤

| ! {{ 9a . [D ! 0 ! wr b - a . 9w | /ha t hb9b= ¤ 9 ! t wd(9b / 9 h C H ! = / ha t hb9b= ¤ ¤ s 9[t wd(9b / 9 h C H ! = / ha t hb9b= ¤ ¤ s 9[s 9 | ; h / Y95 = 9ww lb! [t h] U d h b /! ; bHD^ b! h - ¤ ! b - a . 9w b5 U ! =9[, [h / Y95 = 9ww lb! [t h] U d h b /! ; bHD^ b! h - ¤ ! b - a . 9w b5 U ! =9[ht 9b = 9ww lb! [t h] U d h b | (=! = - { | /ha a 9b=¤ | ht =d h b! [! ! =w ¤ / a 9b=¤ [h 5 [9¤ 9w] d 9[¤ | | | | |
|---|---|---

molex

a ĀĒ₴₭ıuĒ₴ [!59{9[ ]5 9[ ]{{Ða ! ¤ {9[[
. ha ! b5 t b h - ¤ {1 99 ¤

! {{9a . [D5(9[/ wa< ¤b<b a - 9w	/ha t hb¤b¤	/ha a 9b¤<	¤ < - {	; h/ Y95 ×9wa ib[ ] [{	ht ¤b¤b[! [¤ ww ¤ / a 9b¤< [h5[5 9w 9w9[¤9[¤
	! {{9a . [D5(9[/ wa< ¤b<b a - 9w	I h - (Ða D Y9Ða¤b1 hw	! ¤ {9[a ! = {9[	! / ¤ ! ¤ ! ¤ !

molex

a ƒ€$¥¤#£; [! 59{ 9[[95 ! {{Ða ! ¤ {9[[
. ha ! b5 t b h - ¤ {! 99¤

! {{9a _[D5[9/ nat ¤b\b	/ha t hb\B¤		;h/ Y95 ¤9wa \b! [{	‹¤! ¤ - {	/ha a 9b¤‹	ht ¤b\b[! ¤¤! ¤/ ! a 9b¤‹ [h[5 [9(9¤ 9w[¤9[¤
	¤[9¤ tvW[9b/9hC¤ ! . , wP E ¤b\b ib5\U ! ¤[¤[9 tvW[9b/9hC¤! ¤/ ha t hb\B¤ ¤ !	/! ' bP¤ ' b¤[! ! b- a . 9wib5\U ! ¤[¤[		

molex

a /€$¥¢₩₳₿₹ [! 59{9[[95 ! {{Ða ! ¤ {9[[
. ha ! b5 t tb h- ¤{1 99¤

| ! {{9a . [D5!9(/ wt ¤b b- a . 9w | ! {{9a . [D5!9(/ wt ¤b b | /ha t hb/9b¤ ¤ ¤[9 t w¥[9b/9 h C ! b ! . , w# E ¤b b ib5 U ! ¤[¤[9 t w¥[9b/9 h C ¤[! ¤ / ha t hb/9b ¤ ¤ ¤ | /ha t hb/9b¤ | ; h/ Y95 ¤9wa ib!] { | | |

molex

a /ƸƸ¥uƸƸ¶ [! 59{9[95 ! {{Ða ! ¤{9[[
. ha ! b5 t tb h- ¤ [99¤

A ! ¤
{9 [
/ hb b5t vhw
I h - (b D
Dwha a 9w
/ ! t
t «ka ! wƸƸh/Y
«Ab Ch«l 9a 9b« t [¤(
Ch«l 55tHb h [tDCh«l ! «Hb b {99 (5:ƸƸƸ

molex

a /ES%u/ES/1 [! 59{9[95 ! {{Ða ! ¤ {9[[. ha ! b5 t th- ¤ {1 99¤

| ! {{%a . [0 5 9 [¤ ª ¤ b ¤ | /ha t h b %¤ ª | ¤[5 ½ ¢ ¢ ¥ ¢ b ¢ (b ¦ . , ¤ª ¤ ª ¤ b h b . b ¢ 5 ½ ! ¤ ¢ ¤ 5 ¤ ª ¤ 9 ! ¢ ¢ ¥ ¢ b ¢ ¦ h (¤ ª ¤ ª ¤ h a t h b ¤ ª ¤ | . ! h ' ¥ % ¤ ¤ ª ¤ ! ' ½ ¢ ¤ ª ¤ ! ' ½ ¢ ¤ ª ¤ ! ' ½ ¢

molex

a /ES₩uES₹\ [! 59{9[95 ! {{Ða ! ¤{9[[. ha ! b5 t tb h- ¤ {I 99¤

| ! {{Ña . [DS9/ ¤æ ¤ b ¤ b | /ha t h b ¶b ¤ | | ¤[5¹¹ ¤æ€¶Bv/9 h¢C1 b ! , . ¤æP E ¤b¤h ß¢5U¹ ¤% ¤[9 t ¤æ€¶Bv/9 h¢C¤[¤ /ha t h b¶b¤ ¤ | | /! ¹ ¤æP¹ b¢ ! b- a . 9wqb5U¹ ¤% ¤[h¢/¶95 ¤%æ ß0 ! t h ¶ ¤ b b /! ¹ ¤æP¹ b¢ h- ¤ ! b- a . 9wqb5U¹ ¤% ¤[h¢/¶95 ¤%æ ß0 ! t h ¶ ¤ b b | | |

molex

a /ƸƵ¥uƸƵ¤ı [! 59{9[[95 ! {{Ða ! ¤{9[[
. ha ! b5 t th- ¤ {1 99¤

| ! {{%a . [05 9(¤ld ¤h b | /ha t h b %h ¤ | ¤[5 t ¼6(%h C) b ! . , ¼6P E ¤d h b ß5 G ! ¤9(¤[9 t ¼6(%h 7 h C ¤[! ¤ /ha t h b %h ¤ = | . ! h / ! 95(¤%w ß0 [{ | / ! ' ¼6P ' b¢ ! b - a . 5w ß5 G ! ¤9(. [h / ! 95 ¤%w ß0 [! t h (d h b / ! ' ¼6P ' b¢ h - ¤ ! b - a . 5w ß5 G ! ¤9(¤ ! h / ! 95 ¤%w ß0 [! t h (d h b | ¼[= (| /ha a %¤ | h ¤ h ß5 [! ¤ ¤[¤ ! a %¤[(9 E D | | |

TABLE OF CONTENTS

SHEET NO.	SHEET DESCRIPTION
1	NOTES
2	KEY CONFIGURATIONS
3	BLADE SEALED ASSEMBLY
4	SYSTEM PACKAGING
5	BOM

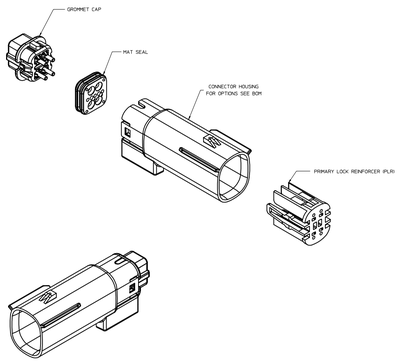

NOTES: VALID UNLESS OTHERWISE SPECIFIED

1. GENERAL:
a. APPLICATION SPECIFICATION SEE: AS-33472-100
CONTAINS PRODUCT INTRODUCTION, PRODUCT SUMMARY,
CONNECTOR ASSEMBLY, PACKAGING INFORMATION, CONNECTOR
MATING, CONNECTOR UNMATING, CRIMPING, CONTINUITY
CHECKING, CRIMPING AND TROUBLESHOOTING.
-DESIGNED TO MATE WITH RECEPTACLE SEALED ASSEMBLY
-FOR 10mm BLADE TERMINALS TO BE USED WITH THIS ASSEMBLY
-FOR 12mm BLADE TERMINALS TO BE USED WITH THIS ASSEMBLY
-SEE MOLEX DRAWING SD-33302-001
-FOR USE WITH WIRE CONDUCTORS WITHIN DIAMETER RANGE OF 1.6mm TO 2.69mm,
-ASSEMBLY SHIPPED WITH PLR IN PRE-LOC POSITION.
-IN THE EVENT THAT THE PLR IS FOUND IN THE SEATED (FINAL LOCK)
POSITION, REFER TO CUSTOMER APPLICATION PS-34646-001 AVAILABLE AT
WWW.MOLEX.COM HTTP://WWW.MOLEX.COM/
-ASSEMBLY CONFORMS TO SAE/USCAR-2 REV.6 WITH THE FOLLOWING EXCEPTIONS:
-ASSEMBLY WITHDRAWAL FORCE FOR WIRE DIAMETER ABOVE 2.0mm NOT EXCEEDING 2.69mm
SHALL NOT EXCEED 45 NEWTONS.
b. PRODUCT SPECIFICATION SEE: PS-33472-000.
CONTAINS PRODUCT INTRODUCTION, PRODUCT SUMMARY,
RATINGS (CURRENT, TEMPERATURE, SEALING, AND FLAMMABILITY),
AND PRODUCT VALIDATION.
c. PACKAGING SPECIFICATION SEE: PK-33300-635
d. PARTS MUST BE IN COMPLIANCE TO MOLEX CHEMICAL SUBSTANCES FOR
PRODUCTS AND PACKAGING SPECIFICATION EIS-60000-1098
e. ORDERS SHALL BE SUBMITTED UNDER THE MOLEX PART NUMBER TO MDS
COMPLIANT ENTERPRISE

2. DESIGN - MATERIALS:
a. CONNECTOR HOUSING, GROMMET CAP, PLR: 50%NYLON 20% GLASS FILLED
b. MAT SEAL: INTERNALLY LUBRICATED SILICONE

3. DESIGN - GEOMETRY:
a. THIS IS A 100% CAD GENERATED PART. THE CAD MATHEMATICAL DATA
(3D SOLID MODEL) IS THE PRIMARY SOURCE FOR GEOMETRY INFORMATION
NOT SHOWN ON THIS DRAWING. ANALYSIS TO THE CAD MODEL.
b. GEOMETRIC DIMENSIONS AND TOLERANCES PER ASME Y14.5M - 1994
c. DIMENSIONS ARE IN MILLIMETERS [INCHES] UNLESS NOTED OTHERWISE
d. CRIMPED TO WIRES DESIGNED TO MIL-T-22520/15
e. LETTERING SHALL BE 0.15 MAX RAISED IN 0.25 MAX RECESS PAD.
THIS INCLUDES RECYCLING CODE, CAVITY ID, VENDOR IDENTIFICATION.
f. VISUAL DEFECTS SHALL MEET COSMETIC STANDARD PS-45499-002 (Class B)
g. LASER MARKING TBD

INSPECTION NUMBER LOG
LAST NUMBER USED:
ADDED:
REMOVED:

REV	DESCRIPTION
V	UPDATED STATUS AND COMMENTS COLUMNS
U	ADD NEW P/N 33482-4437
T	ADD NEW P/N 33482-4476 33482-4496
S	ADD NEW P/N 33482-4419
R	ADD NEW P/N 33482-4412
Q	UPDATED GROMMET CAP
P3	UPDATED DIMENSIONS
P2	UPDATED DIMENSIONS TO MATCH MODEL
P1	UPDATED NOTES
P	REDRAWN

REVISED			
ECN#	ECR/ECO#	DATE	APPROVED
2010-28717	2010-28717	07/19/10	JAMES MOSHER
2010-30297	2010-30297	08/18/10	JAMES MOSHER

QUALITY SYMBOLS	GENERAL TOLERANCES (UNLESS SPECIFIED)	MM	INCH
	1 PLACES	±	±
	2 PLACES	±	±
	3 PLACES	±	±
	4 PLACE DEC	±	±
	ANGULAR	± °	

DRAFT WHERE APPLICABLE
WITHIN DIMENSIONS

DIMENSION STYLE: MM ONLY

	NAME	DATE
DRAWN BY	MYANSLAMBROU	04-27-06
CHECKED BY		DATE
ENGR/PM	GRIFFITHS	06-22-06
APPROVED BY		DATE
	DWARD LAU	06-22-06

SIZE: A3
SCALE: 3:1
DESIGN UNITS: METRIC
THIRD ANGLE PROJECTION

TITLE: MX150 2X2 BLADE SEALED ASSEMBLY MAT SEAL

molex

DOCUMENT NO: SD-33482-041
SHEET NO: 1 OF 5

THIS DRAWING CONTAINS INFORMATION THAT IS PROPRIETARY TO MOLEX INCORPORATED AND SHOULD NOT BE USED WITHOUT WRITTEN PERMISSION

KEY CONFIGURATIONS

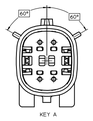

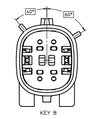

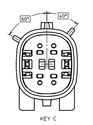

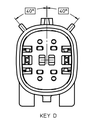

REVISED			
REVISED PER ECR/ECO 0526-0165			
DRAWN BY LT	07/18/06		
ENGINEER LT	07/18/06		
APPROVED MVANSLAMBROU	07/18/06		
AUTOMATION MVANSLAMBROU	07/18/06		
REV	DESCRIPTION	DATE	APPROVED

QUALITY SYMBOLS

GENERAL TOLERANCES (UNLESS SPECIFIED)

	MM	INCH
1 PLACES	± ---	± ---
2 PLACES	± ---	± ---
3 PLACES	± 0.10	± ---
4 PLACES	± 0.03	± ---
2 PLACE ∠	1°	

ANGULAR ± 3 °

DRAFT WHERE APPLICABLE

MAT SEAL WITHIN DIMENSIONS

DIMENSION STYLE: MM ONLY

SCALE: 4:1

DESIGN UNITS: METRIC

THIRD ANGLE PROJECTION

DRAWN BY	MVANSLAMBROU	04-27-06
CHECKED BY	DGRIFFITHS	06-22-06
APPROVED BY	DMARCEAU	06-22-06
INTERNAL USE ONLY		

TITLE: MX150 2X2 BLADE SEALED ASSEMBLY MAT SEAL

molex

DOCUMENT NO: SD-33482-041

SHEET NO: 2 OF 5

SIZE: A

CUSTOMER DRAWING: SEE BOM

THIS DRAWING CONTAINS INFORMATION THAT IS PROPRIETARY TO MOLEX INCORPORATED AND SHOULD NOT BE USED WITHOUT WRITTEN PERMISSION

BLADE SEALED ASSEMBLY

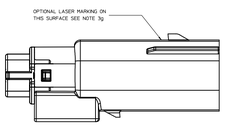

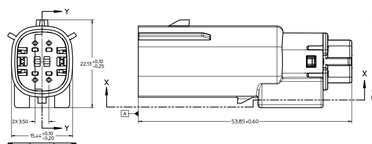

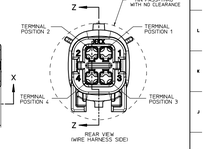

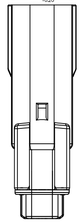

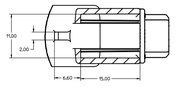

PARTIAL X-X
SCALE 4:1

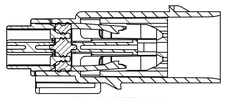

PRIMARY LOCK REINFORCER (PLR) SHOWN IN PRE-STAGED POSITION

SECTION Z-Z

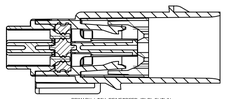

PRIMARY LOCK REINFORCER (PLR) SHOWN IN FINAL LOCK POSITION

SECTION Y-Y

REVISED			
REVISION RECORD	ENGINEER	DATE	
ECR/ECM 09-0165	JOHN HARTLEY	07/15/09	
ECR/ECM 10-0187	JOHN HARTLEY	07/15/10	
ECR/ECM 10-0187	JOHN HARTLEY	07/15/10	

QUALITY SYMBOLS

GENERAL TOLERANCES (UNLESS SPECIFIED)

	mm	INCH
1 PLACES	±	±
2 PLACES	±	±
3 PLACES	±	±
4 PLACES	±	±
ANGULAR	± °	

DRAFT WHERE APPLICABLE ALL DIMENSIONS WITHIN TOLERANCES

DIMENSION STYLE: MM ONLY

SCALE: 4:1

DESIGN UNITS: METRIC

THIRD ANGLE PROJECTION

	NAME	DATE
DRAWN BY	IVANSLAMBROU	04-27-06
CHECKED BY	IGRIFFITHS	06-22-06
APPROVED BY	DMACEAU	06-22-06

TITLE: MX150 2X2 BLADE SEALED ASSEMBLY MAT SEAL

molex

DOCUMENT NO: SD-33482-041

SHEET NO: 3 OF 5

SEE BOM

THIS DRAWING CONTAINS INFORMATION THAT IS PROPRIETARY TO MOLEX INCORPORATED AND SHOULD NOT BE USED WITHOUT WRITTEN PERMISSION

SYSTEM PACKAGING

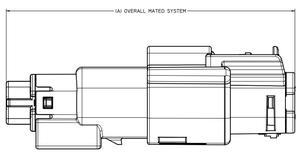

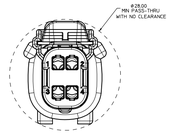

CHARTED DIMENSIONS		
RECEPTACLE ASSY PART NUMBER	CONFIGURATION	A
33472-0401 THRU 33472-0432	MX150 2X2 RECEPTACLE SEALED ASSEMBLY - STANDARD	72.78
33472-4401 THRU 33472-4432	MX150 2X2 RECEPTACLE SEALED ASSEMBLY - LENGTHENED	77.21

REVISED PER ECR/ECO 0719-0165 (DW-Aus) 07/19/16
DRAWING SET AS PER ECR/ECO 0719-0178 (DW-Aus) 07/19/16
LATEST REVISION AS PER ECR/ECO 0719-0185 07/19/16

QUALITY SYMBOLS

GENERAL TOLERANCES (UNLESS SPECIFIED)

	MM	INCH
1 PLACES	± ---	± ---
2 PLACES	± ---	± ---
3 PLACES	± 0.10	± ---
4 PLACES	± 0.05	± ---
5 PLACES	± 0.03	± ---
0 PLACE	±	±

ANGULAR ± 3°
DRAFT WHERE APPLICABLE
ALL DIMENSIONS WITHIN DIMENSIONS

DIMENSION STYLE: MM ONLY

DRAWN BY	IVANSLAMBROU	04-27-06
CHECKED BY	IGRIFFITHS	04-22-06
APPROVED BY	DMACEAU	04-22-06
INTERNAL USE ONLY		

SCALE: 4:1
DESIGN UNITS: METRIC
THIRD ANGLE PROJECTION

TITLE: MX150 2X2 BLADE SEALED ASSEMBLY MAT SEAL

molex

DOCUMENT NO: SD-33482-041
SHEET NO: 4 OF 5

SIZE: A
SEE BOM

THIS DRAWING CONTAINS INFORMATION THAT IS PROPRIETARY TO MOLEX INCORPORATED AND SHOULD NOT BE USED WITHOUT WRITTEN PERMISSION

BOM SHEET 1

ASSEMBLY PART NUMBER	COLOR	KEYING OPTION	CAVITY TYPE & STATUS A = PLUGGED				STATUS	COMMENTS
			-1	-2	-3	-4		
33482-0601	BLACK	A					PLANNED OBSOLESCENCE SEE DRAWING SD-33482-0002 FOR REPLACEMENT P/N	REPLACEMENT P/N'S ARE: 33482-04XX TO 33482-49XX 33482-44XX TO 33482-49XX
33482-0602	LIGHT GRAY	B						
33482-0603	BROWN	C						
33482-0604	GREEN	D						
33482-0605	BLACK	A		X				
33482-0606	LIGHT GRAY	B		X				
33482-0607	BROWN	C		X				
33482-0608	GREEN	D		X				
33482-0609	BLACK	A		X	X			
33482-0610	LIGHT GRAY	B		X	X			
33482-0611	BROWN	C		X	X			
33482-0612	GREEN	D		X	X			
33482-0613	BLACK	A	X	X	X	X		
33482-0614	LIGHT GRAY	B	X	X	X	X		
33482-0615	BROWN	C	X	X	X	X		
33482-0616	GREEN	D	X	X	X	X		
33482-0617	BLACK	A	X	X	X			
33482-0618	BLACK	A				X		
33482-0619	BLACK	A			X	X		
33482-0620	BLACK	A	X	X				
33482-4403	DARK GRAY	C						
33482-4404	STONE GRAY	D						
33482-4405	DARK GRAY	C		X				
33482-4406	STONE GRAY	D		X				
33482-4407	DARK GRAY	C		X	X			
33482-4408	STONE GRAY	D		X	X			
33482-4409	DARK GRAY	C	X	X	X	X		
33482-4410	STONE GRAY	D	X	X	X	X		
33482-4411	BLACK	A		X		X		
33482-4412	YELLOW	A						
33482-4413	LIGHT GRAY	B	X					
33482-4414	BLACK	A	X		X			
33482-4416	DARK GRAY	C		X		X		
33482-4417	LIGHT GRAY	B		X		X		

| REVISED | | | | | |

TABLE OF CONTENTS

SHEET NO.	SHEET DESCRIPTION
1	NOTES
2	KEY CONFIGURATIONS
3	BLADE SEALED ASSEMBLY
4	SYSTEM PACKAGING
5	BOM

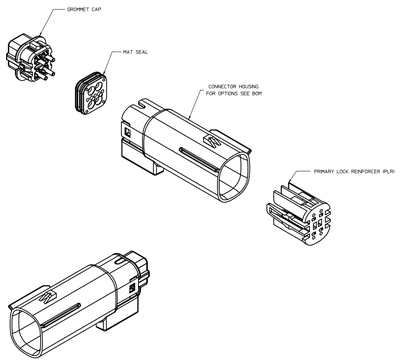

NOTES: VALID UNLESS OTHERWISE SPECIFIED

1. GENERAL:
a. APPLICATION SPECIFICATION SEE: AS-33472-100
CONTAINS PRODUCT INTRODUCTION, PRODUCT SUMMARY,
CONNECTOR ASSEMBLY, PACKAGING INFORMATION, CONNECTOR
MATING, CONNECTOR UNMATING, CRIMPING, CONTINUITY
CHECKING, CRIMPING AND TROUBLESHOOTING.
-DESIGNED TO MATE WITH RECEPTACLE SEALED ASSEMBLY
-FOR 10mm BLADE TERMINALS TO BE USED WITH THIS ASSEMBLY
-FOR 12mm BLADE TERMINALS TO BE USED WITH THIS ASSEMBLY
-SEE MOLEX DRAWING SD-33302-001
-FOR USE WITH WIRE CONDUCTORS WITHIN DIAMETER RANGE OF 1.6mm TO 2.69mm,
-ASSEMBLY SHIPPED WITH PLR IN PRE-LOC POSITION.
-IN THE EVENT THAT THE PLR IS FOUND IN THE SEATED (FINAL LOCK)
POSITION, REFER TO CUSTOMER APPLICATION PS-34646-001 AVAILABLE AT
WWW.MOLEX.COM HTTP://WWW.MOLEX.COM/
-ASSEMBLY CONFORMS TO SAE/USCAR-2 REV.6 WITH THE FOLLOWING EXCEPTIONS:
-ASSEMBLY WITHDRAWAL FORCE FOR WIRE DIAMETER ABOVE 2.0mm NOT EXCEEDING 2.69mm
SHALL NOT EXCEED 45 NEWTONS.
b. PRODUCT SPECIFICATION SEE: PS-33472-000.
CONTAINS PRODUCT INTRODUCTION, PRODUCT SUMMARY,
RATINGS (CURRENT, TEMPERATURE, SEALING, AND FLAMMABILITY),
AND PRODUCT VALIDATION.
c. PACKAGING SPECIFICATION SEE: PK-33300-635
d. PARTS MUST BE IN COMPLIANCE TO MOLEX CHEMICAL SUBSTANCES FOR
PRODUCTS AND PACKAGING SPECIFICATION EIS-60000-1098
e. ORDERS SHALL BE SUBMITTED UNDER THE MOLEX PART NUMBER TO MDS
COMPLIANT ENTERPRISE

2. DESIGN - MATERIALS:
a. CONNECTOR HOUSING, GROMMET CAP, PLR: 50%NYLON 20% GLASS FILLED
b. MAT SEAL: INTERNALLY LUBRICATED SILICONE

3. DESIGN - GEOMETRY:
a. THIS IS A 100% CAD GENERATED PART. THE CAD MATHEMATICAL DATA
(3D SOLID MODEL) IS THE PRIMARY SOURCE FOR GEOMETRY INFORMATION
NOT SHOWN ON THIS DRAWING. ANALYSIS TO THE CAD MODEL.
b. GEOMETRIC DIMENSIONS AND TOLERANCES PER ASME Y14.5M - 1994
c. DIMENSIONS ARE IN MILLIMETERS [INCHES] UNLESS NOTED OTHERWISE
d. CRIMPED TO WIRES DESIGNED TO MIL-T-22520/15
e. LETTERING SHALL BE 0.15 MAX RAISED IN 0.25 MAX RECESS PAD.
THIS INCLUDES RECYCLING CODE, CAVITY ID, VENDOR IDENTIFICATION.
f. VISUAL DEFECTS SHALL MEET COSMETIC STANDARD PS-45499-002 (Class B)
g. LASER MARKING TBD

INSPECTION NUMBER LOG
LAST NUMBER USED:
ADDED:
REMOVED:

REV	DESCRIPTION
V	UPDATED STATUS AND COMMENTS COLUMNS
U	ADD NEW P/N 33482-4437
T	ADD NEW P/N 33482-4476 33482-4496
S	ADD NEW P/N 33482-4419
R	ADD NEW P/N 33482-4412
Q	UPDATED GROMMET CAP
P3	UPDATED DIMENSIONS
P2	UPDATED DIMENSIONS TO MATCH MODEL
P1	UPDATED NOTES
P	REDRAWN

REVISED			
ECN#	ECR/ECO#	DATE	APPROVED
2010-28717	2010-28717	07/19/10	JAMES MOSHER
2010-30297	2010-30297	08/18/10	JAMES MOSHER

QUALITY SYMBOLS	GENERAL TOLERANCES (UNLESS SPECIFIED)	MM	INCH
	1 PLACES	±	±
	2 PLACES	±	±
	3 PLACES	±	±
	4 PLACE DEC	±	±
	ANGULAR	± °	

DRAFT WHERE APPLICABLE
WITHIN DIMENSIONS

DIMENSION STYLE: MM ONLY

	NAME	DATE
DRAWN BY	MYANSLAMBROU	04-27-06
CHECKED BY		DATE
ENGR/PM	GRIFFITHS	06-22-06
APPROVED BY		DATE
	DWARD LAU	06-22-06

SIZE: A3
SCALE: 3:1
DESIGN UNITS: METRIC
THIRD ANGLE PROJECTION

TITLE: MX150 2X2 BLADE SEALED ASSEMBLY MAT SEAL

molex

DOCUMENT NO: SD-33482-041
SHEET NO: 1 OF 5

THIS DRAWING CONTAINS INFORMATION THAT IS PROPRIETARY TO MOLEX INCORPORATED AND SHOULD NOT BE USED WITHOUT WRITTEN PERMISSION

KEY CONFIGURATIONS

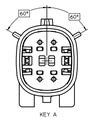

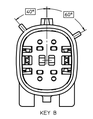

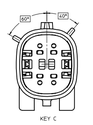

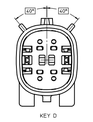

REVISED			
REVISED PER ECR/ECO 0526-0165			
DRAWN BY LT	07/18/06		
ENGINEER LT	07/18/06		
APPROVED MVANSLAMBROU	07/18/06		
AUTOMATION MVANSLAMBROU	07/18/06		
REV	DESCRIPTION	DATE	APPROVED

QUALITY SYMBOLS

GENERAL TOLERANCES (UNLESS SPECIFIED)

	MM	INCH
1 PLACES	± ---	± ---
2 PLACES	± ---	± ---
3 PLACES	± 0.10	± ---
4 PLACES	± 0.03	± ---
2 PLACE ∠	1°	

ANGULAR ± 3 °

DRAFT WHERE APPLICABLE

MAT SEAL WITHIN DIMENSIONS

DIMENSION STYLE: MM ONLY

SCALE: 4:1

DESIGN UNITS: METRIC

THIRD ANGLE PROJECTION

DRAWN BY	MVANSLAMBROU	04-27-06
CHECKED BY	DGRIFFITHS	06-22-06
APPROVED BY	DMARCEAU	06-22-06
INTERNAL USE ONLY		

TITLE: MX150 2X2 BLADE SEALED ASSEMBLY MAT SEAL

molex

DOCUMENT NO: SD-33482-041

SHEET NO: 2 OF 5

SIZE: A

CUSTOMER DRAWING: SEE BOM

THIS DRAWING CONTAINS INFORMATION THAT IS PROPRIETARY TO MOLEX INCORPORATED AND SHOULD NOT BE USED WITHOUT WRITTEN PERMISSION

BLADE SEALED ASSEMBLY

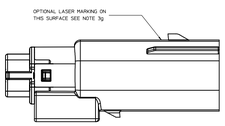

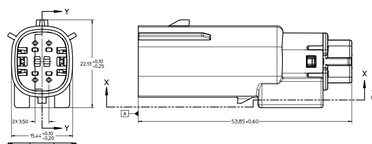

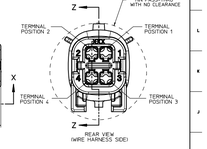

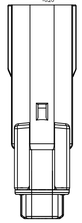

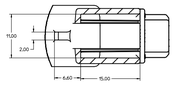

PARTIAL X-X
SCALE 4:1

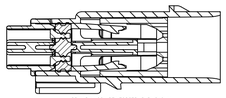

PRIMARY LOCK REINFORCER (PLR) SHOWN IN PRE-STAGED POSITION

SECTION Z-Z

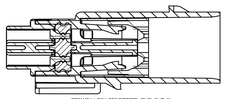

PRIMARY LOCK REINFORCER (PLR) SHOWN IN FINAL LOCK POSITION

SECTION Y-Y

REVISED			
REVISION RECORD	ENGINEER	DATE	
ECR/ECM 09-0165	JOHN HARTLEY	07/15/09	
ECR/ECM 10-0187	JOHN HARTLEY	07/15/10	
ECR/ECM 10-0187	JOHN HARTLEY	07/15/10	

QUALITY SYMBOLS

GENERAL TOLERANCES (UNLESS SPECIFIED)

	mm	INCH
1 PLACES	±	±
2 PLACES	±	±
3 PLACES	±	±
4 PLACES	±	±
ANGULAR	± °	

DRAFT WHERE APPLICABLE ALL DIMENSIONS WITHIN TOLERANCES

DIMENSION STYLE: MM ONLY

SCALE: 4:1

DESIGN UNITS: METRIC

THIRD ANGLE PROJECTION

	NAME	DATE
DRAWN BY	IVANSLAMBROU	04-27-06
CHECKED BY	IGRIFFITHS	06-22-06
APPROVED BY	DMACEAU	06-22-06

TITLE: MX150 2X2 BLADE SEALED ASSEMBLY MAT SEAL

molex

DOCUMENT NO: SD-33482-041

SHEET NO: 3 OF 5

SEE BOM

THIS DRAWING CONTAINS INFORMATION THAT IS PROPRIETARY TO MOLEX INCORPORATED AND SHOULD NOT BE USED WITHOUT WRITTEN PERMISSION

SYSTEM PACKAGING

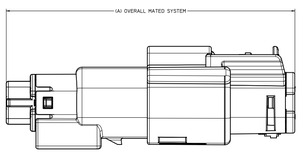

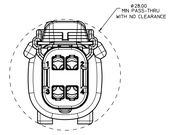

CHARTED DIMENSIONS		
RECEPTACLE ASSY PART NUMBER	CONFIGURATION	A
33472-0401 THRU 33472-0432	MX150 2X2 RECEPTACLE SEALED ASSEMBLY - STANDARD	72.78
33472-4401 THRU 33472-4432	MX150 2X2 RECEPTACLE SEALED ASSEMBLY - LENGTHENED	77.21

REVISED PER ECR/ECO 0719-0165 (DW-Aus) 07/19/16
DRAWING SET AS PER ECR/ECO 0719-0178 (DW-Aus) 07/19/16
LATEST REVISION AS PER ECR/ECO 0719-0185 07/19/16

QUALITY SYMBOLS

GENERAL TOLERANCES (UNLESS SPECIFIED)

	MM	INCH
1 PLACES	± ---	± ---
2 PLACES	± ---	± ---
3 PLACES	± 0.10	± ---
4 PLACES	± 0.05	± ---
5 PLACES	± 0.03	± ---
0 PLACE	±	±

ANGULAR ± 3°
DRAFT WHERE APPLICABLE
ALL DIMENSIONS WITHIN DIMENSIONS

DIMENSION STYLE: MM ONLY

DRAWN BY	IVANSLAMBROU	04-27-06
CHECKED BY	IGRIFFITHS	04-22-06
APPROVED BY	DMACEAU	04-22-06
INTERNAL USE ONLY		

SCALE: 4:1
DESIGN UNITS: METRIC
THIRD ANGLE PROJECTION

TITLE: MX150 2X2 BLADE SEALED ASSEMBLY MAT SEAL

molex

DOCUMENT NO: SD-33482-041
SHEET NO: 4 OF 5

SIZE: A
SEE BOM

THIS DRAWING CONTAINS INFORMATION THAT IS PROPRIETARY TO MOLEX INCORPORATED AND SHOULD NOT BE USED WITHOUT WRITTEN PERMISSION

BOM SHEET 1

ASSEMBLY PART NUMBER	COLOR	KEYING OPTION	CAVITY TYPE & STATUS A = PLUGGED				STATUS	COMMENTS
			-1	-2	-3	-4		
33482-0601	BLACK	A					PLANNED OBSOLESCENCE SEE DRAWING SD-33482-0002 FOR REPLACEMENT P/N	REPLACEMENT P/N'S ARE: 33482-04XX TO 33482-49XX 33482-44XX TO 33482-49XX
33482-0602	LIGHT GRAY	B						
33482-0603	BROWN	C						
33482-0604	GREEN	D						
33482-0605	BLACK	A		X				
33482-0606	LIGHT GRAY	B		X				
33482-0607	BROWN	C		X				
33482-0608	GREEN	D		X				
33482-0609	BLACK	A		X	X			
33482-0610	LIGHT GRAY	B		X	X			
33482-0611	BROWN	C		X	X			
33482-0612	GREEN	D		X	X			
33482-0613	BLACK	A	X	X	X	X		
33482-0614	LIGHT GRAY	B	X	X	X	X		
33482-0615	BROWN	C	X	X	X	X		
33482-0616	GREEN	D	X	X	X	X		
33482-0617	BLACK	A	X	X	X			
33482-0618	BLACK	A				X		
33482-0619	BLACK	A			X	X		
33482-0620	BLACK	A	X	X				
33482-4403	DARK GRAY	C						
33482-4404	STONE GRAY	D						
33482-4405	DARK GRAY	C		X				
33482-4406	STONE GRAY	D		X				
33482-4407	DARK GRAY	C		X	X			
33482-4408	STONE GRAY	D		X	X			
33482-4409	DARK GRAY	C	X	X	X	X		
33482-4410	STONE GRAY	D	X	X	X	X		
33482-4411	BLACK	A		X		X		
33482-4412	YELLOW	A						
33482-4413	LIGHT GRAY	B	X					
33482-4414	BLACK	A	X		X			
33482-4416	DARK GRAY	C		X		X		
33482-4417	LIGHT GRAY	B		X		X		

| REVISED | | | | | |