Part Number : 349670002
Product Description : Mini50 Sealed Cavity Plug, 13.85mm Length, Light Gray
Series Number : 34967
Status : Active
Product Category : Connector Accessories
Engineering Number : CVP-349670002

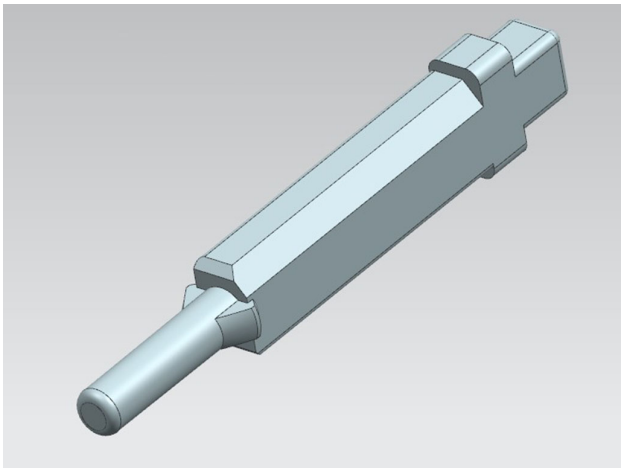

Documents & Resources

Drawings
349670002_sd.pdf

Product Environment Compliance

Compliance

GADSL/IMDS	Compliant
China RoHS	Not Relevant
EU ELV	Compliant per 2000/53/EC
Low-Halogen Status	Low-Halogen per IEC 61249-2-21
REACH SVHC	Not Contained per D(2024)4144-DC (27 June 2024)
EU RoHS	Compliant per EU 2015/863

Multiple Part Product Compliance Statements
- Eu RoHS
- REACH SVHC
- Low-Halogen

Multiple Part Industry Compliance Documents
- IPC 1752A Class C
- IPC 1752A Class D
- Molex Product Compliance Declaration
- IEC-62474

- chemSHERPA (xml)

EU RoHS Certificate of Compliance

Part Details

General

Status	Active
Category	Connector Accessories
Series	34967
Description	Mini50 Sealed Cavity Plug, 13.85mm Length, Light Gray
Component Type	Cavity Plug
Product Name	Mini50 Sealed
UPC	193264258574

Physical

Circuits (Loaded)	0
Color - Resin	Gray (Light)
Gender	Plug
Material - Resin	Nylon
Net Weight	0.036/g
Packaging Type	Bag