Part Number : 387536706
Product Description : Wrap-Around Cover Kit For 9.53mm Pitch Tri-Barrier Terminal Strips, 6 Circuits
Series Number : 38753
Status : Obsolete
Product Category : Connector Accessories
Engineering Number : CW0506

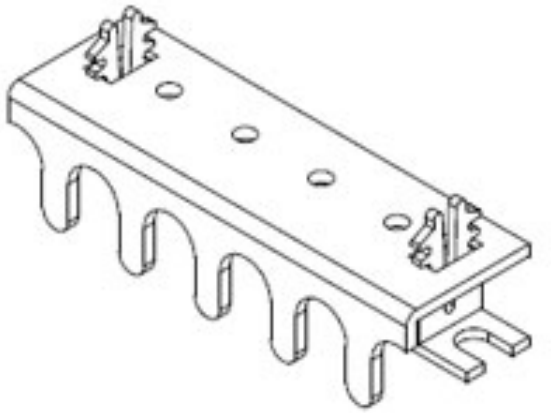

Documents & Resources

Product Environment Compliance

Compliance

GADSL/IMDS	Not Relevant
China RoHS	Not Relevant
EU ELV	Not Relevant
Low-Halogen Status	Not Low-Halogen per IEC 61249-2-21
REACH SVHC	Not Contained per D(2020)4578-DC (25 June 2020)
EU RoHS	Compliant per EU 2015/863

Multiple Part Product Compliance Statements

- Eu RoHS
- REACH SVHC
- Low-Halogen

Multiple Part Industry Compliance Documents

- IPC 1752A Class C
- IPC 1752A Class D
- Molex Product Compliance Declaration
- IEC-62474
- chemSHERPA (xml)

EU RoHS Certificate of Compliance

Part Details

General

Status	Obsolete
Category	Connector Accessories
Series	38753
Description	Wrap-Around Cover Kit For 9.53mm Pitch Tri-Barrier Terminal Strips, 6 Circuits
Component Type	Cover Kit
Product Name	N/A
UPC	800756342153

Physical

Circuits (Loaded)	6
Circuits (maximum)	6
Color - Resin	Black
Lock to Mating Part	Yes
Material - Resin	Polyester Alloy
Net Weight	4.643/g
Packaging Type	Bag
Temperature Range - Operating	-40° to +105°C