ITEM NO.	MATERIAL
43032-3300	VALOX 457-7125; 94V-0, 7 1/2% GLASS-FILLED POLYESTER, COLOR-BLACK.

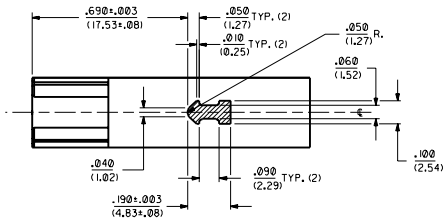

SECTION C-C

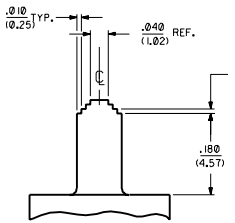

DETAIL D

(SCALE 8:1)

NOTES:

1. DIMENSIONS GIVEN ACROSS CENTERLINES ARE SYMMETRICAL ABOUT THOSE CENTERLINES TO WITHIN .004/(0.10) TOTAL TOLERANCE.
2. THIS HOUSING ACCEPTS MOLEX TERMINAL NO'S. 1219, 1220, 42824, AND 42825.
3. ALL RADII TO BE .015/(0.38) UNLESS OTHERWISE SPECIFIED.
4. MXN-, AND CAVITY NO. TO BE .040/(1.02) HIGH AND RAISED .002/.005/(0.05/0.13). LOCATE APPROXIMATELY AS SHOWN ON A RECTANGULAR PAD THAT IS RECESSED .005/.007/(0.13/0.18).
5. EJECTOR PINS TO BE LOCATED ON A .170/(4.32) DIA. PAD THAT IS RECESSED .005/(0.13) AND LOCATED ON OPPOSITE SIDE APPROXIMATELY AS SHOWN.

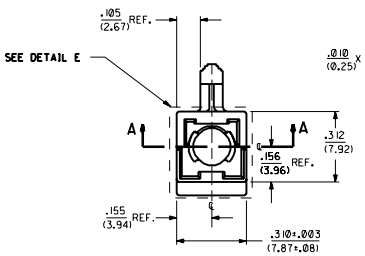

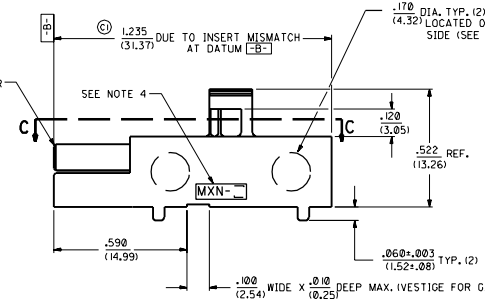

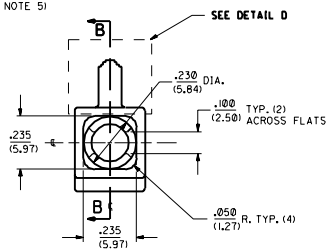

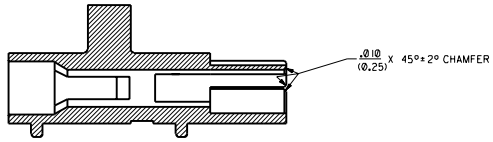

SECTION B-B

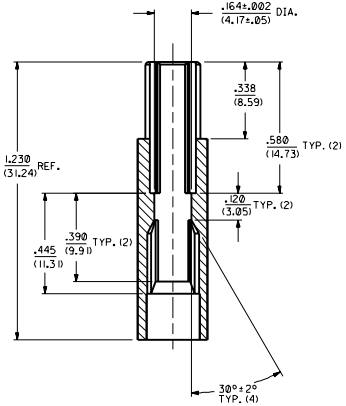

SECTION A-A

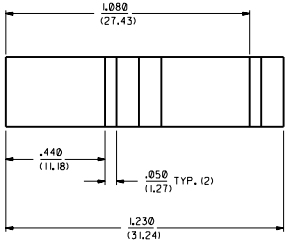

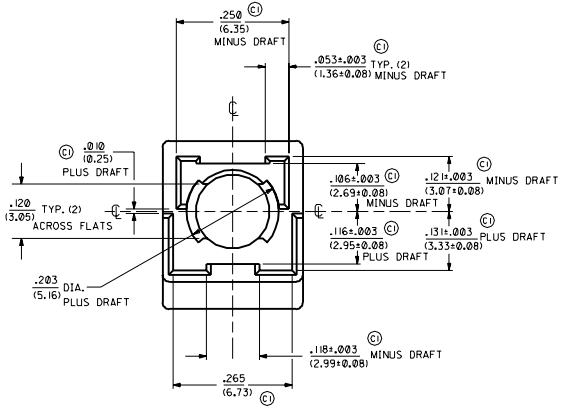

DETAIL E

(SCALE 8:1)

C1	UPDATE TO I.R. ECN U30765	93/05/24	DMS
C	REV. POLARIZATION ECN U30162	93/02/23	DMS
B	REVISE PER ECN U21559	92/10/27	DMS
A	RMV X-ADD VESTIGE ECN U21157	92/09/30	DMS
-	X RELEASE ECN U12328	92/07/09	DMS
MFG.	SHL	REV.	LTR.	REVISIONS

DIMENSIONS SHOWN IN MILLIMETER [INCH]
UNLESS OTHERWISE SPECIFIED TOLERANCES, ANGULAR: ±1°

	INCH	MILLIMETER
1 PLACE	± .005	---
2 PLACE	± .01	± 0.13
3 PLACE	---	± 0.25

DRAFT ENTIRE APPLICABLE MOLD REMAIN WITHIN DIMENSIONS

▽ = Ø ▼ = Ø REVISE ONLY ON CAD SYSTEM

TITLE: SELECTABLE HOUSING -ONE CIRCUIT-

MOLEX INCORPORATED LISLE, ILL. USA

SHEET NO. 1 OF 2

DATE 92/06/25

PART NO. SEE CHART

DRWG. NO. SD-43032-3300

DRWN BY	CHK'D BY	APPD BY	SCALE
DMS	SBB	RWD	4:1

FILE NAME 5430323300

THIS DRAWING CONTAINS INFORMATION THAT IS PROPRIETARY TO MOLEX INC. AND SHOULD NOT BE USED WITHOUT WRITTEN PERMISSION

REV. C0 SIZE D

NO P.S.