This document was generated on 08/15/2018

PLEASE CHECK WWW.MOLEX.COM FOR LATEST PART INFORMATION

Part Number: 0545972600
Status: Active
Overview: Mini Mi II™ Wire Harness
Description: Mini Mi II Connector Position Assurance (CPA) Retainer, 26 Circuits

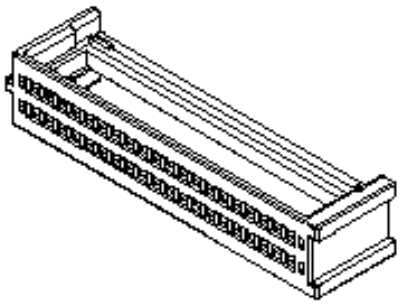

Series image - Reference only

Documents:

3D Model
Drawing (PDF)
Product Specification PS-54596-007-001 (PDF)
Product Specification PS-54596-019-001 (PDF)
Product Specification PS-55659-004-001 (PDF)
Product Specification PS-55659-005-001 (PDF)
RoHS Certificate of Compliance (PDF)

General

Product Family	Accessories
Series	54597
Component Type	Connector Position Assurance
Overview	Mini Mi II™ Wire Harness
Product Name	CPA - Conn Pos Assurance, Mini Mi II
UPC	800753281073

Physical

Circuits (Loaded)	26
Circuits (maximum)	26
Color - Resin	Natural
Gender	Female
Material - Resin	Nylon
Net Weight	276.600/mg
Number of Rows	2
Packaging Type	Bag
Temperature Range - Operating	-40° to +105°C

Material Info

Reference - Drawing Numbers

Product Specification	PS-54596-007-001, PS-54596-019-001, PS-55659-004-001, PS-55659-005-001
Sales Drawing	SD-54597-002

EU ELV
Not Relevant

EU RoHS
Compliant

China RoHS

REACH SVHC
Not Contained Per - ED/61/2018 (27 June 2018)

Halogen-Free Status
Not Low-Halogen

Need more information on product environmental compliance?

Email productcompliance@molex.com
Please visit the Contact Us section for any non-product compliance questions.

China ROHS	Green Image
ELV	Not Relevant
RoHS Phthalates	Not Contained

Search Parts in this Series
54597 Series

Use With
54596

This document was generated on 08/15/2018

PLEASE CHECK WWW.MOLEX.COM FOR LATEST PART INFORMATION