3D MODEL: 747540024 PSM ASY

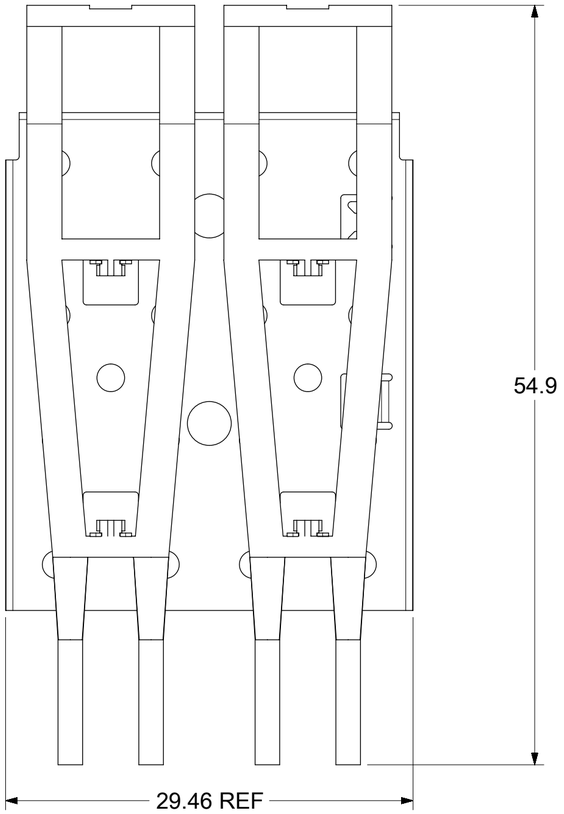

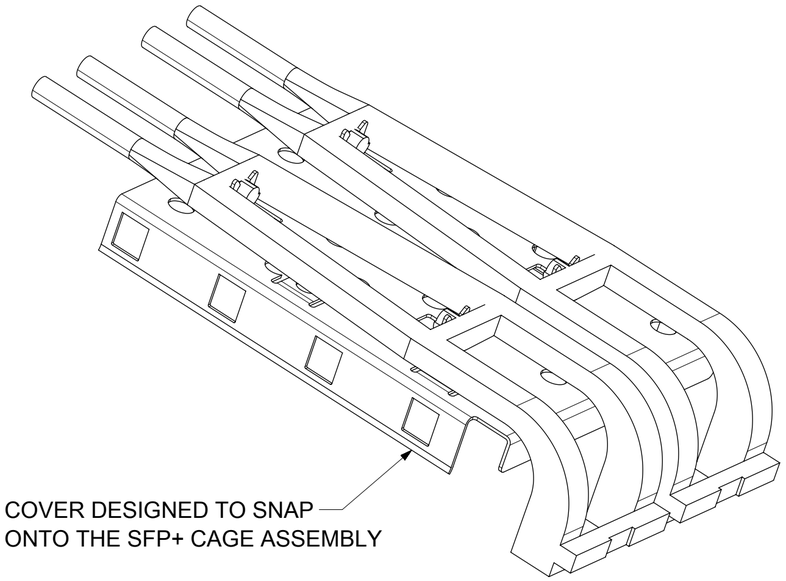

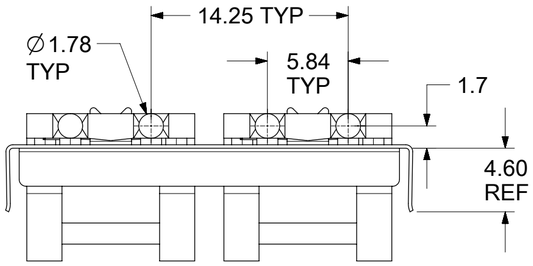

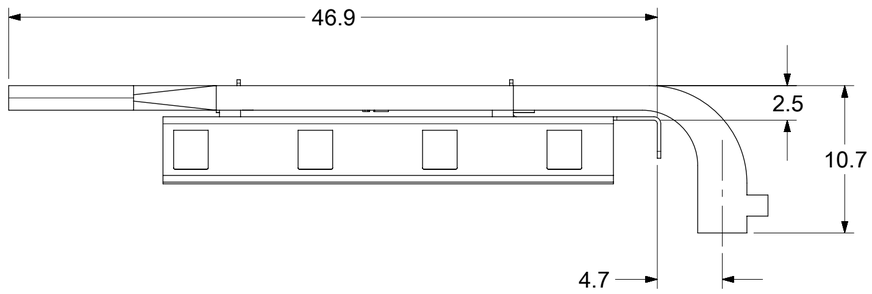

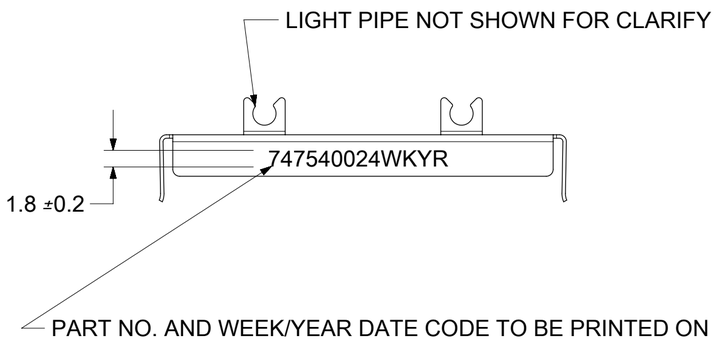

PART NO. AND WEEK/YEAR DATE CODE TO BE PRINTED ON BACK OF COVER APPROXIMATELY AS SHOWN. SEE TABLE BELOW FOR DATE CODE INFORMATION.

WEEK/YEAR DATE CODE TABLE	
WK	WEEK OF THE YEAR 01 THRU 52 (EXAMPLE: 01= FIRST WEEK OF YEAR 52= LAST WEEK OF YEAR)
YR	19, 20, 21 ETC,,,(EXAMPLE: YEAR 2019= 19)

1. MATERIAL:
   COVER: COPPER ALLOY
   LIGHT PIPE: POLYCARBONATE (94-V0 RATED)
2. THIS LIGHT PIPE ASSEMBLY IS TO BE USED WITH THE SFP+ 1X4 CAGE ASSEMBLY P/N 747540224
3. IT IS RECOMMENDED THAT THE CAGE BE PRESSED INTO OR SOLDERED TO THE PCB PRIOR TO ASSEMBLING THE LIGHT PIPE ASSEMBLY.
4. NO RoHS EXEMPTIONS

DOCUMENT STATUS	P1	RELEASE DATE	2019/01/09 08:17:00

SYMBOLS
EA = 0
EC = 0
EP = 0
S = 0
▼ = 0
C = 0
☒ = 0
■ = 0
V = 0

THIS DRAWING CONTAINS INFORMATION THAT IS PROPRIETARY TO MOLEX ELECTRONIC TECHNOLOGIES, LLC AND SHOULD NOT BE USED WITHOUT WRITTEN PERMISSION

DIMENSION UNITS: mm
SCALE: 4:1

GENERAL TOLERANCES (UNLESS SPECIFIED)

ANGULAR TOL	± 1.0 °
4 PLACES	±
3 PLACES	±
2 PLACES	± 0.15
1 PLACE	± 0.25
0 PLACES	±

DRAFT WHERE APPLICABLE MUST REMAIN WITHIN DIMENSIONS

CURRENT REV DESC: SEE REVISION TABLE

EC NO: 610070
DRWN: PMAHADEVAPPA 2018/12/19
CHK'D: TKUMARKC 2019/01/08
APPR: RCHEN08 2019/01/09

INITIAL REVISION:
DRWN: TMARRI 2017/03/08
APPR: RCHEN08 2017/04/26

THIRD ANGLE PROJECTION | DRAWING: C-SIZE | SERIES: 74754

molex

SFP+ 1X2 PCI LIGHT PIPE
COVER ASSY, ULTRA LOW PROFILE, BACK TOP

PRODUCT CUSTOMER DRAWING

DOCUMENT NUMBER	DOC TYPE	DOC PART	REVISION
747540024	PSD	ASY	B1

MATERIAL NUMBER	CUSTOMER	SHEET NUMBER
747540024		1 OF 3

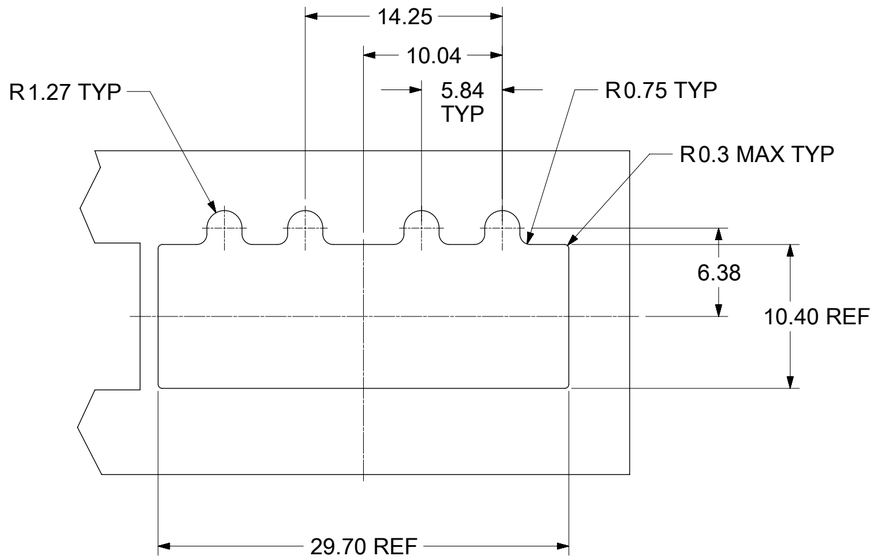

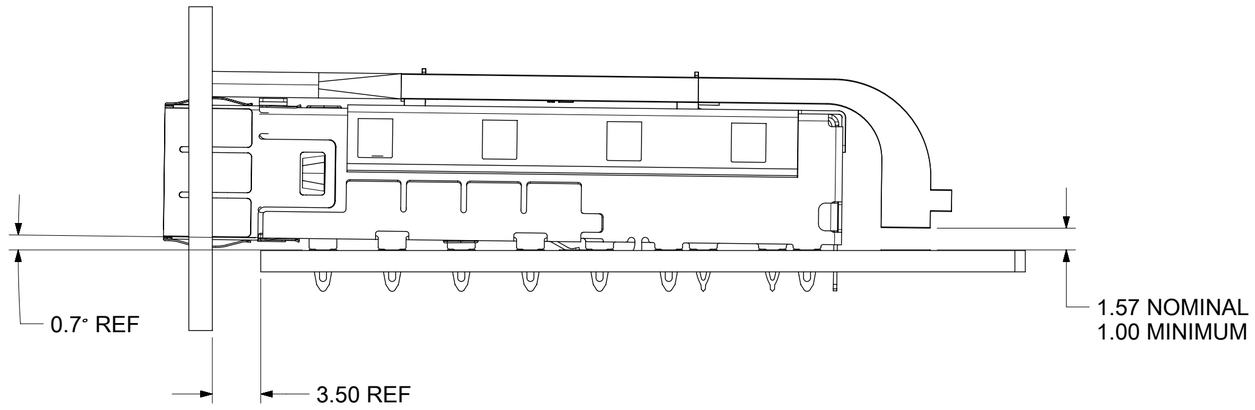

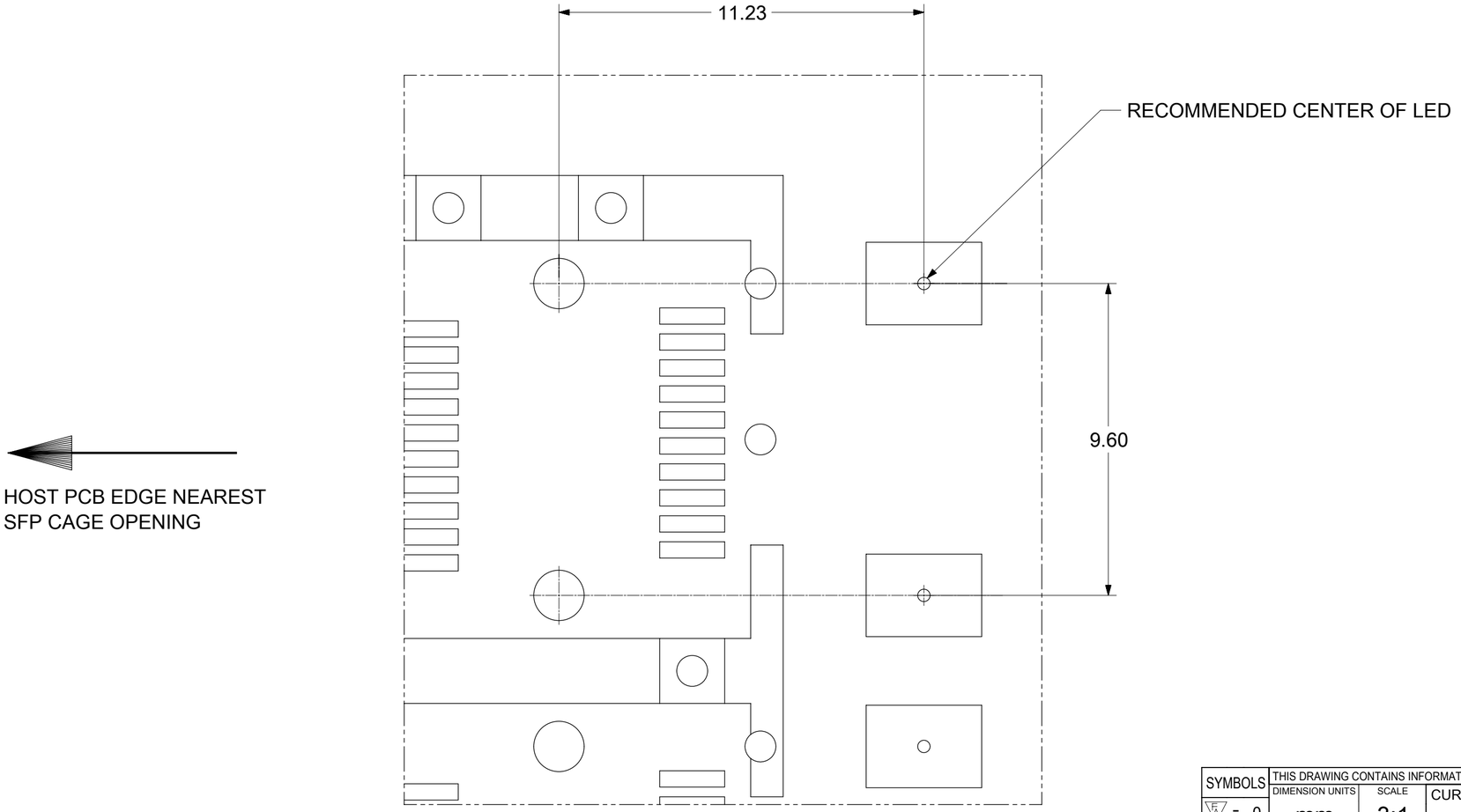

HOST PCB LAYOUT (SCALE 8:1)
1. LED SHOULD BE PLACED RELATIVE TO THE SFP CONNECTOR POST HOLES
2. LAYOUT APPLIES TO EACH PORT

SYMBOLS		
FA = 0		
FC = 0		
FP = 0		
S = 0		
▼ = 0		
C = 0		
☒ = 0		
■ = 0		
V = 0		

THIS DRAWING CONTAINS INFORMATION THAT IS PROPRIETARY TO MOLEX ELECTRONIC TECHNOLOGIES, LLC AND SHOULD NOT BE USED WITHOUT WRITTEN PERMISSION

DIMENSION UNITS	SCALE
mm	3:1

GENERAL TOLERANCES (UNLESS SPECIFIED)

ANGULAR TOL	±	1.0 °
4 PLACES	±	
3 PLACES	±	
2 PLACES	±	0.15
1 PLACE	±	0.25
0 PLACES	±	

DRAFT WHERE APPLICABLE MUST REMAIN WITHIN DIMENSIONS

CURRENT REV DESC: SEE REVISION TABLE

EC NO:	610070	
DRWN:	PMAHADEVAPPA	2018/12/19
CHK'D:	TKUMARKC	2019/01/08
APPR:	RCHEN08	2019/01/09

INITIAL REVISION:

DRWN:	TMARRI	2017/03/08
APPR:	RCHEN08	2017/04/26

THIRD ANGLE PROJECTION

DRAWING	SERIES
C-SIZE	74754

molex

SFP+ 1X2 PCI LIGHT PIPE
COVER ASSY, ULTRA LOW PROFILE, BACK TOP

PRODUCT CUSTOMER DRAWING

DOCUMENT NUMBER	DOC TYPE	DOC PART	REVISION
747540024	PSD	ASY	B1

MATERIAL NUMBER	CUSTOMER	SHEET NUMBER
747540024		2 OF 3

DOCUMENT STATUS	P1	RELEASE DATE	2019/01/09 08:17:00

REV	DATE	DESCRIPTION
A	2009/06/19	INITIAL RELEASE
B	2017/03/20	REMASTERED FROM SD-74754-0024 REV_A TO 747540024 PSD ASY REV_B IN NX SHEET 2: H8 : ADDED DIM R0.3 MAX TYP
B1	2019/01/08	SHEET 1 : D: 2 : VIEW ADDED FOR DATE CODE REPRESENTATION.

THIS DRAWING CONTAINS INFORMATION THAT IS PROPRIETARY TO MOLEX ELECTRONIC TECHNOLOGIES, LLC AND SHOULD NOT BE USED WITHOUT WRITTEN PERMISSION

SYMBOLS
FA = 0
FC = 0
FP = 0
S = 0
= 0
C = 0
= 0
= 0
= 0

DIMENSION UNITS: mm
SCALE: 1:1

GENERAL TOLERANCES (UNLESS SPECIFIED)

ANGULAR TOL	± 1.0 °
4 PLACES	±
3 PLACES	±
2 PLACES	± 0.15
1 PLACE	± 0.25
0 PLACES	±

DRAFT WHERE APPLICABLE MUST REMAIN WITHIN DIMENSIONS

CURRENT REV DESC: SEE REVISION TABLE

EC NO: 610070
DRWN: PMAHADEVAPPA 2018/12/19
CHK'D: TKUMARKC 2019/01/08
APPR: RCHEN08 2019/01/09

INITIAL REVISION:
DRWN: TMARRI 2017/03/08
APPR: RCHEN08 2017/04/26

THIRD ANGLE PROJECTION
DRAWING: C-SIZE
SERIES: 74754

molex

SFP+ 1X2 PCI LIGHT PIPE
COVER ASSY, ULTRA LOW PROFILE, BACK TOP

PRODUCT CUSTOMER DRAWING

DOCUMENT NUMBER	DOC TYPE	DOC PART	REVISION
747540024	PSD	ASY	B1

MATERIAL NUMBER	CUSTOMER	SHEET NUMBER
747540024		3 OF 3

DOCUMENT STATUS	P1	RELEASE DATE	2019/01/09 08:17:00

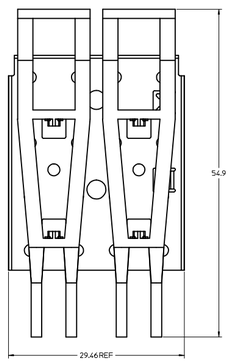

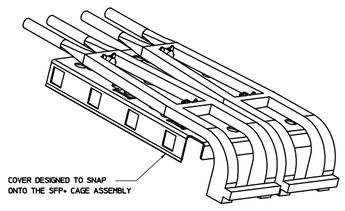

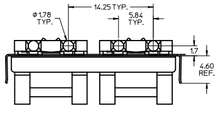

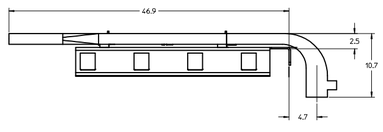

1. MATERIAL:
   COVER: COPPER ALLOY
   LIGHT PIPE: POLYCARBONATE (94-V0 RATED)
2. THIS LIGHT PIPE ASSEMBLY IS TO BE USED WITH THE SFP+ 1X4 CAGE ASSEMBLY P/N 747540224
3. IT IS RECOMMENDED THAT THE CAGE BE PRESSED INTO OR SOLDERED TO THE PCB PRIOR TO ASSEMBLING THE LIGHT PIPE ASSEMBLY.
4. THIS PART MEETS THE RESTRICTION OF HAZARDOUS SUBSTANCES IN ELECTRICAL AND ELECTRONIC EQUIPMENT (ROHS) DIRECTIVE (2002/95/EC)

REVISION RECORD			
REV	DESCRIPTION	ECR/ECA	DATE
A	RELEASED	ECA NO. 0032009-05514	2009/08/26
		DRAWN: JRESENDE	2009/08/26
		CHKD: JRESENDE	2009/08/26
		APPR.: JRESENDE	2009/08/26

QUALITY SYMBOLS: ▼=0, ▽=0

GENERAL TOLERANCES (UNLESS SPECIFIED)	mm	INCH
4 PLACES	± ---	± ---
3 PLACES	± ---	± ---
2 PLACES	± 0.15	± ---
1 PLACE	± 0.25	± ---
ANGULAR ± 1 °		

DRAFT WHERE APPLICABLE MUST REMAIN WITHIN DIMENSIONS

DIMENSION STYLE: MM ONLY		
DRAWN BY	JRESENDE	DATE 2009/6/19
CHECKED BY	JRESENDE	DATE 2009/6/19
APPROVED BY	KJANOTA	DATE 2009/6/19
MATERIAL NO.	747540224	
SIZE	D	

SCALE: 4:1 | DESIGN UNITS: METRIC | THIRD ANGLE PROJECTION

TITLE: SFP+ 1X2 PCI LIGHT PIPE COVER ASSY, ULTRA LOW PROFILE, BACK TOP

MOLEX INCORPORATED

DOCUMENT NO.: SD-74754-0024 | SHEET NO.: 1 OF 2

THIS DRAWING CONTAINS INFORMATION THAT IS PROPRIETARY TO MOLEX INCORPORATED AND SHOULD NOT BE USED WITHOUT WRITTEN PERMISSION

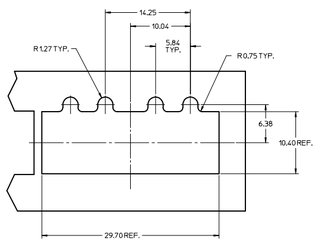

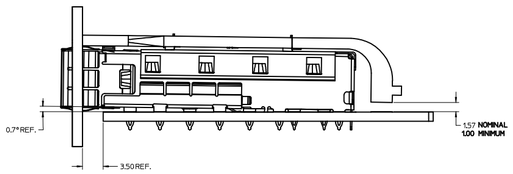

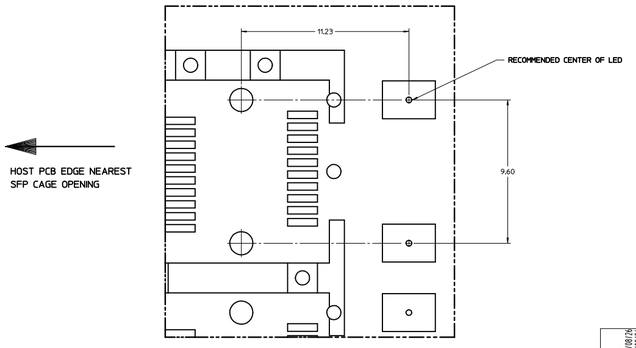

HOST PCB LAYOUT (SCALE 10:1)
1. LED SHOULD BE PLACED RELATIVE TO THE SFP CONNECTOR POST HOLES
2. LAYOUT APPLIES TO EACH PORT

RELEASED
ECN: 09-007209-0594
DRAWN: JRESENDE 2009/08/26
CHKD: JRESENDE 2009/08/26
APPR.: JRESENDE 2009/08/26
DESCRIPTION
REV
A

QUALITY SYMBOLS
▼=0
▽=0

GENERAL TOLERANCES (UNLESS SPECIFIED)

	mm	INCH
4 PLACES	± ---	± ---
3 PLACES	± ---	± ---
2 PLACES	± 0.15	± ---
1 PLACE	± 0.25	± ---
ANGULAR ± 1 °		

DRAFT WHERE APPLICABLE MUST REMAIN WITHIN DIMENSIONS

DIMENSION STYLE: MM ONLY

DRAWN BY	DATE
JRESENDE	2009/6/19
CHECKED BY	DATE
JRESENDE	2009/6/19
APPROVED BY	DATE
KJANOTA	2009/6/19
MATERIAL NO.	
747540024	
SIZE: D	

SCALE: 3:1
DESIGN UNITS: METRIC
THIRD ANGLE PROJECTION

TITLE: SFP+ 1X2 PCI LIGHT PIPE COVER ASSY, ULTRA LOW PROFILE, BACK TOP

molex MOLEX INCORPORATED

DOCUMENT NO.: SD-74754-0024
SHEET NO.: 2 OF 2

THIS DRAWING CONTAINS INFORMATION THAT IS PROPRIETARY TO MOLEX INCORPORATED AND SHOULD NOT BE USED WITHOUT WRITTEN PERMISSION