3D MODEL: 747690501 PSM ASY

BASE CAGE DETAILS

(APPLIES TO ALL CAGES IN THIS DRAWING)

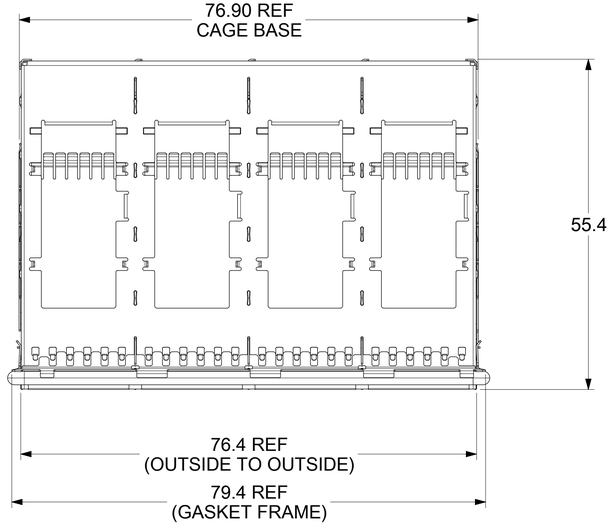

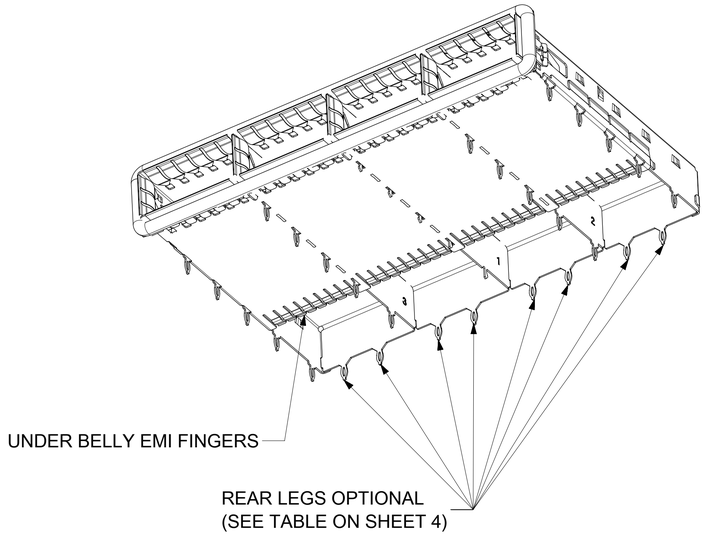

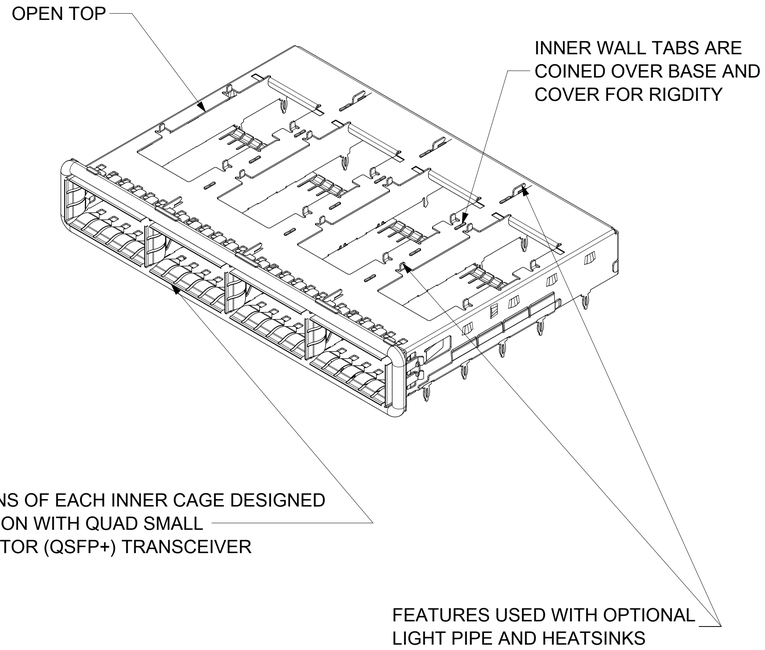

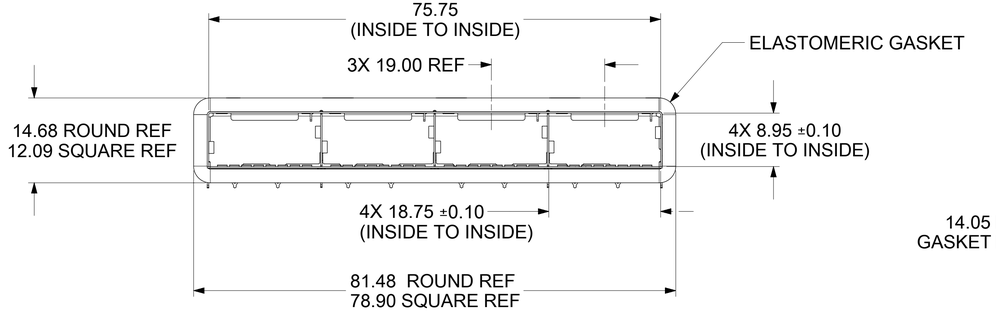

NOTE:
INNER SPRING FINGERS HAVE BEEN REMOVED FOR CLARITY

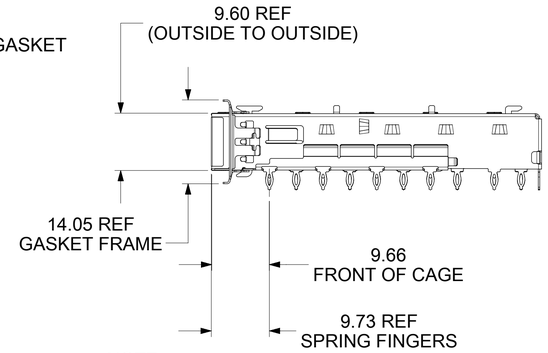

NOTE:
ELASTOMER GASKET REMOVED FOR CLARITY.

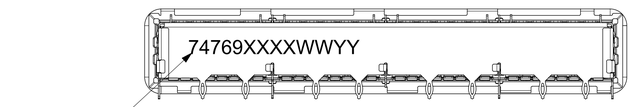

PART NO. AND WEEK/YEAR DATE CODE TO BE PRINTED ON
BACK OF COMPLETED CAGE ASSEMBLY APPROXIMATELY AS SHOWN.
SEE TABLE BELOW FOR DATE CODE INFORMATION.

WEEK/YEAR DATE CODE TABLE	
WK	WEEK OF THE YEAR 01 THRU 52 (EXAMPLE: 01= FIRST WEEK OF YEAR 52= LAST WEEK OF YEAR)
YR	19, 20, 21 ETC.. (EXAMPLE: YEAR 2019= 19)

NOTES:
1. QSFP+ ASSEMBLES ALSO AVAILABLE AND 1X1 (74750 SERIES), 1X2 (74767 SERIES), 1X3 (74768 SERIES), AND 1X6 (74771 SERIES) CONFIGURATIONS.
2. MATERIAL:
   LIGHT PIPE/HEATSINK CLIP: STAINLESS STEEL
   LIGHT PIPES: POLYCARBONATE (94-V0 RATED)
   HEAT SINKS: ANNODIZED ALUMINUM
   CAGE: NICKEL COPPER ALLOY
3. NO RoHS EXEMPTIONS
4. CUSTOM HEATSINKS AVAILABLE UPON REQUEST

DOCUMENT STATUS	P1	RELEASE DATE	2022/02/28 11:54:48

THIS DRAWING CONTAINS INFORMATION THAT IS PROPRIETARY TO MOLEX ELECTRONIC TECHNOLOGIES, LLC AND SHOULD NOT BE USED WITHOUT WRITTEN PERMISSION

DIMENSION UNITS	SCALE
mm	3.5:1

GENERAL TOLERANCES (UNLESS SPECIFIED)

ANGULAR TOL	± 1.0 °
4 PLACES	±
3 PLACES	±
2 PLACES	± 0.15
1 PLACE	± 0.25
0 PLACES	±

DRAFT WHERE APPLICABLE MUST REMAIN WITHIN DIMENSIONS

CURRENT REV DESC: OBSOLETED PART NUMBER AS PER PCN#509451

EC NO: 686785
DRWN: SUGEEB 2021/11/23
CHK'D: GGA 2022/02/28
APPR: GGA 2022/02/28

INITIAL REVISION:
DRWN: SJKG 2017/01/09
APPR: RCHEN08 2019/01/22

THIRD ANGLE PROJECTION | DRAWING: D-SIZE | SERIES: 74769

molex

QSFP+ 1X4 GANGED CAGE
ASSEMBLIES WITH ELASTOMER GASKET

PRODUCT CUSTOMER DRAWING

DOCUMENT NUMBER	DOC TYPE	DOC PART	REVISION
747690501	PSD	ASY	N1

MATERIAL NUMBER	CUSTOMER	SHEET NUMBER
SHT 5, 6, & 7		1 OF 14

CAGE ASSEMBLY OPTIONS

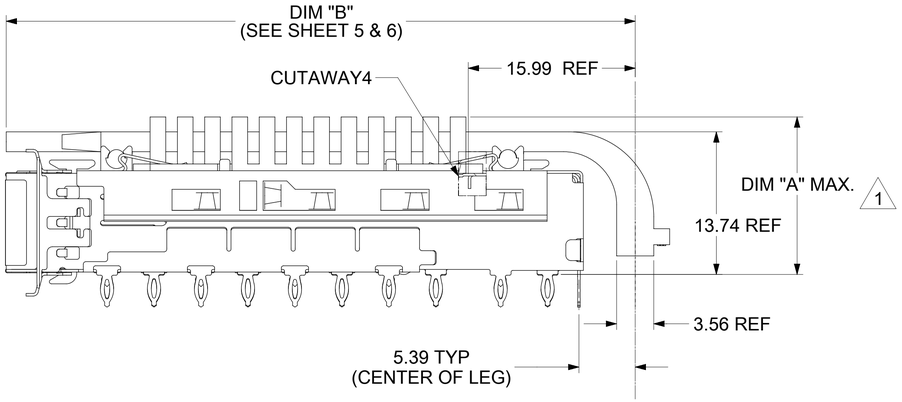

	SINGLE LIGHT PIPE	DUAL LIGHT PIPE	QUAD LIGHT PIPE
PCI HEATSINK (PIN STYLE)	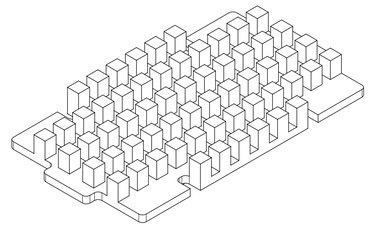	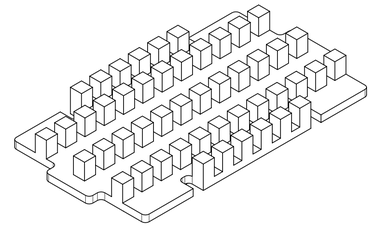	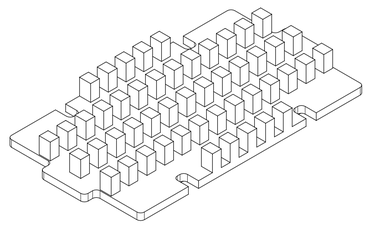
SAN HEATSINK (PIN STYLE)	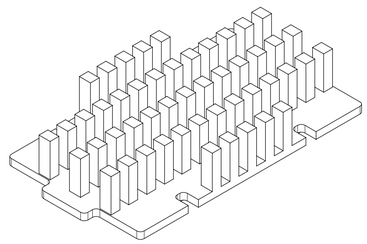	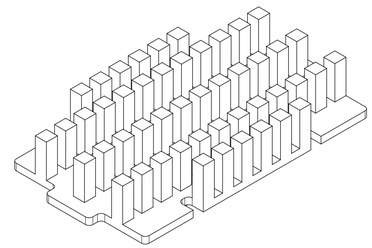	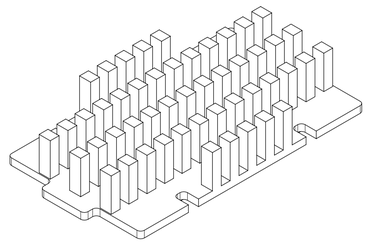
NET HEATSINK (PIN STYLE)	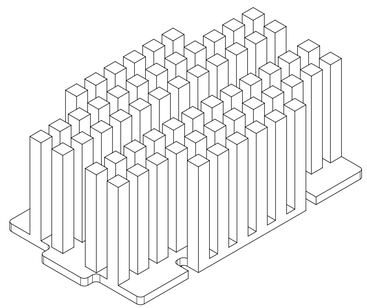	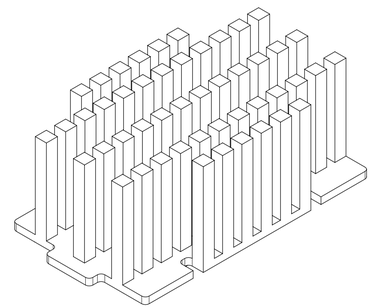	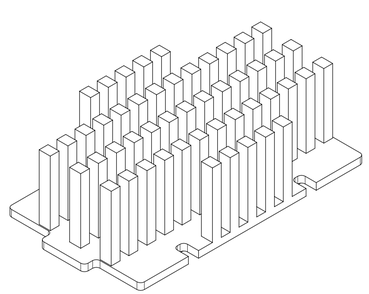

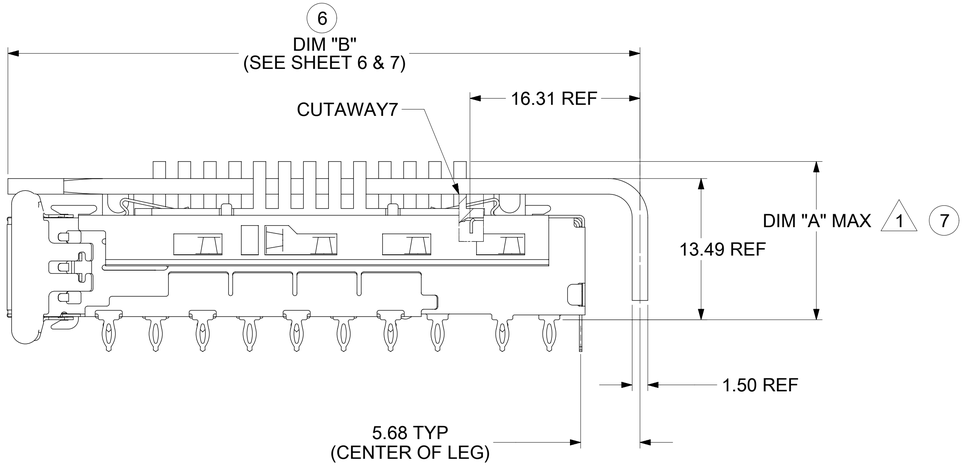

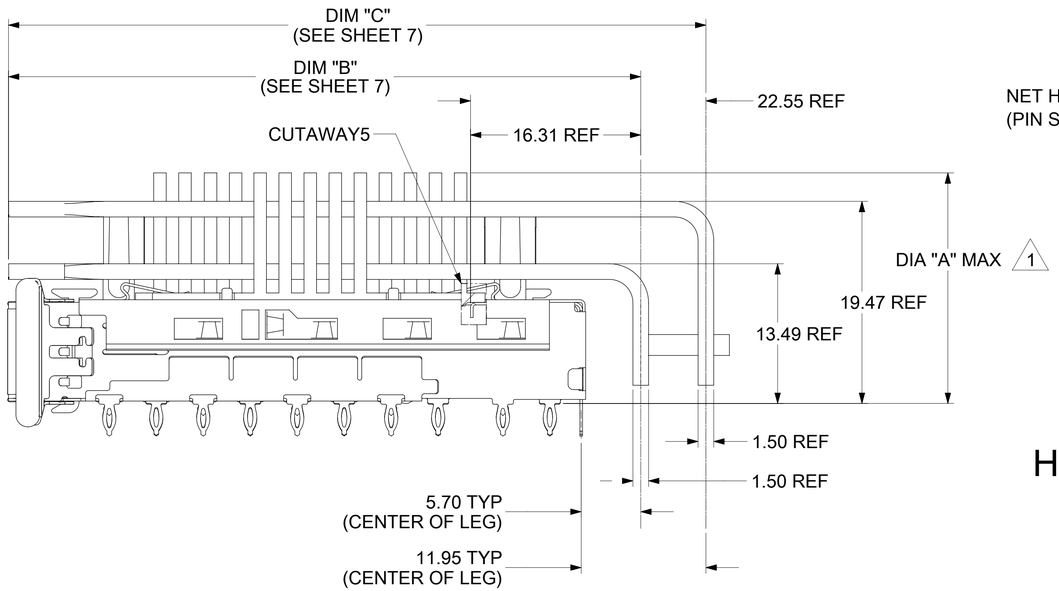

HEATSINK HEIGHT OPTIONS

OVERALL HEATSINK HEIGHT	DIM "A"
PCI	13.7
SAN	16.0
NET	23.0

NOTE:
1) FOR LIGHT PIPE OPTIONS SEE SHEET 3.

1 HEIGHT OF HEATSINK WITH MODULE INSERTED.
DIMENSION MAY BE LESS DUE TO MODULE AND HEATSINK VARIATIONS.

DOCUMENT STATUS	P1	RELEASE DATE	2022/02/28 11:54:48

THIS DRAWING CONTAINS INFORMATION THAT IS PROPRIETARY TO MOLEX ELECTRONIC TECHNOLOGIES, LLC AND SHOULD NOT BE USED WITHOUT WRITTEN PERMISSION

DIMENSION UNITS	SCALE
mm	3.5:1

GENERAL TOLERANCES (UNLESS SPECIFIED)

ANGULAR TOL	± 1.0 °
4 PLACES	±
3 PLACES	±
2 PLACES	± 0.15
1 PLACE	± 0.25
0 PLACES	±

DRAFT WHERE APPLICABLE MUST REMAIN WITHIN DIMENSIONS

CURRENT REV DESC: OBSOLETED PART NUMBER AS PER PCN#509451

EC NO: 686785
DRWN: SUGEEB 2021/11/23
CHK'D: GGA 2022/02/28
APPR: GGA 2022/02/28

INITIAL REVISION:
DRWN: SJKG 2017/01/09
APPR: RCHEN08 2019/01/22

molex

QSFP+ 1X4 GANGED CAGE
ASSEMBLIES WITH ELASTOMER GASKET

PRODUCT CUSTOMER DRAWING

DOCUMENT NUMBER	DOC TYPE	DOC PART	REVISION
747690501	PSD	ASY	N1

THIRD ANGLE PROJECTION	DRAWING	SERIES	MATERIAL NUMBER	CUSTOMER	SHEET NUMBER
	D-SIZE	74769	SHT 5, 6, & 7		2 OF 14

CAGE ASSEMBLY OPTIONS (CONT.)

SINGLE LIGHT PIPE

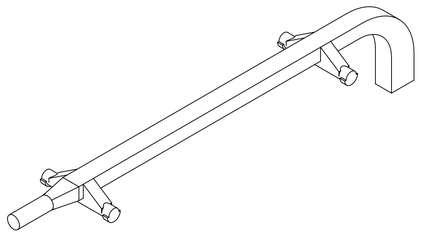

DUAL LIGHT PIPE

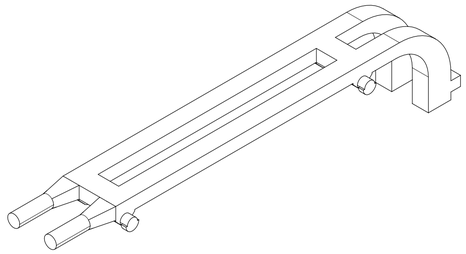

QUAD LIGHT PIPE
(ROUND)

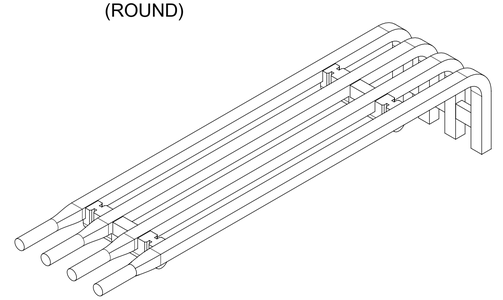

QUAD LIGHT PIPE
(RECTANGULAR)

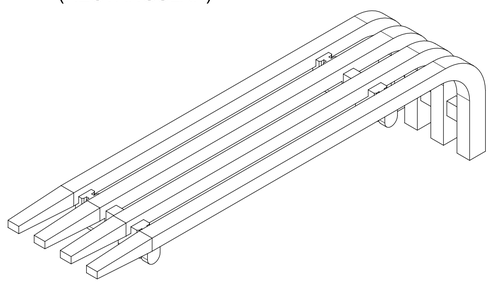

QUAD LIGHT PIPE
(SQUARE)

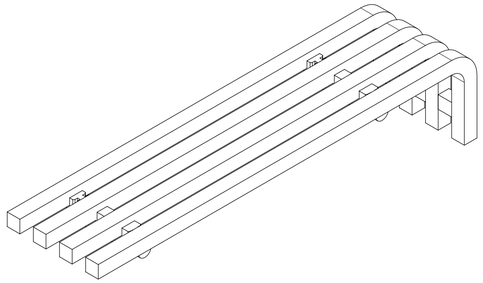

QUAD LIGHT PIPE
(FLARED)

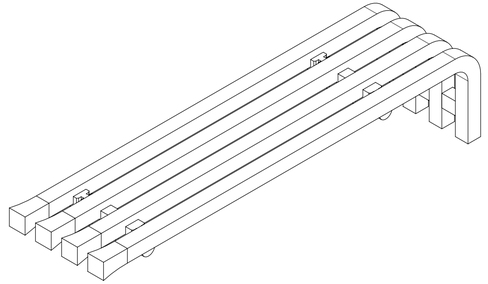

2 ROW QUAD LIGHT PIPE

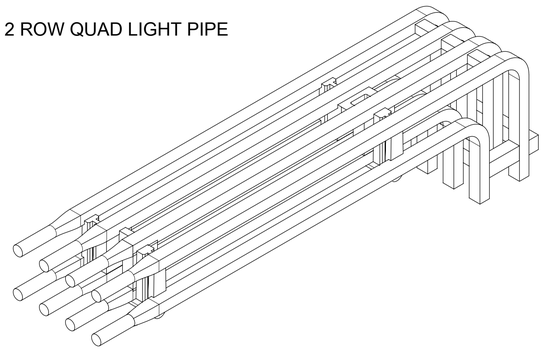

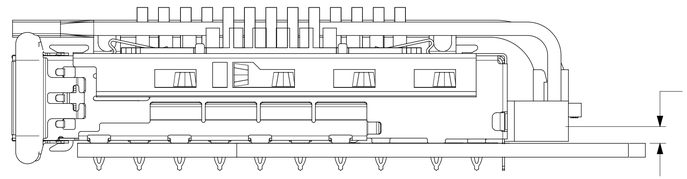

LIGHT PIPE	LED CLEARANCE (REF)
SINGLE	1.875
DUAL	1.875
QUAD (ROUND TIP)	1.875
QUAD (RECTANGLE TIP)	0.931
QUAD (SQUARE TIP)	1.875
QUAD (FLARED TIP)	1.725
QUAD (2 ROW)	1.875

NOTE:
1) FOR HEATSINK OPTIONS SEE SHEET 2.

DOCUMENT STATUS	P1	RELEASE DATE	2022/02/28	11:54:48

THIS DRAWING CONTAINS INFORMATION THAT IS PROPRIETARY TO MOLEX ELECTRONIC TECHNOLOGIES, LLC AND SHOULD NOT BE USED WITHOUT WRITTEN PERMISSION

DIMENSION UNITS: mm | SCALE: 3.5:1

GENERAL TOLERANCES (UNLESS SPECIFIED)

ANGULAR TOL	±	1.0 °
4 PLACES	±	
3 PLACES	±	
2 PLACES	±	0.15
1 PLACE	±	0.25
0 PLACES	±	

DRAFT WHERE APPLICABLE MUST REMAIN WITHIN DIMENSIONS

CURRENT REV DESC: OBSOLETED PART NUMBER AS PER PCN#509451

EC NO: 686785
DRWN: SUGEEB 2021/11/23
CHK'D: GGA 2022/02/28
APPR: GGA 2022/02/28

INITIAL REVISION:
DRWN: SJKG 2017/01/09
APPR: RCHEN08 2019/01/22

THIRD ANGLE PROJECTION | DRAWING: D-SIZE | SERIES: 74769 | MATERIAL NUMBER: SHT 5, 6, & 7 | CUSTOMER | SHEET NUMBER: 3 OF 14

molex

QSFP+ 1X4 GANGED CAGE
ASSEMBLIES WITH ELASTOMER GASKET

PRODUCT CUSTOMER DRAWING

DOCUMENT NUMBER	DOC TYPE	DOC PART	REVISION
747690501	PSD	ASY	N1

CAGE ASSEMBLY OPTIONS (CONT.)

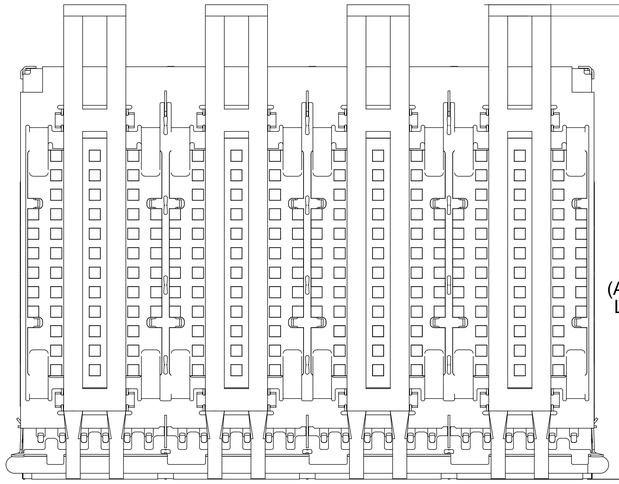

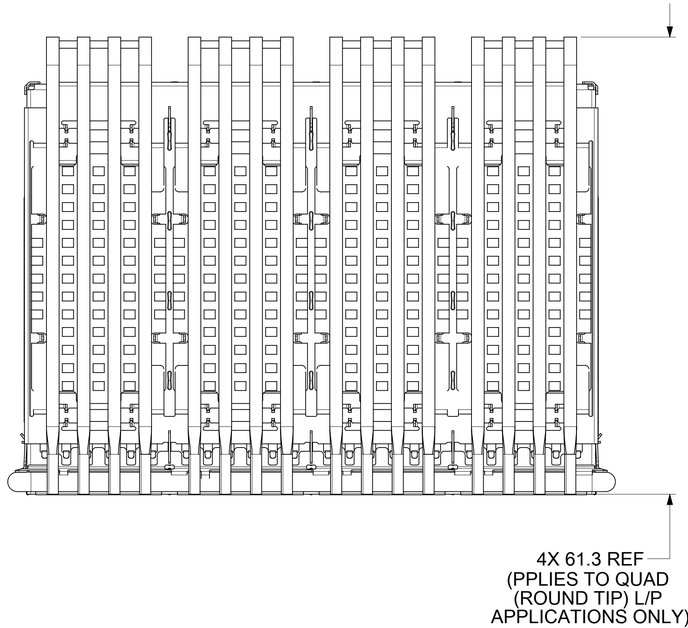

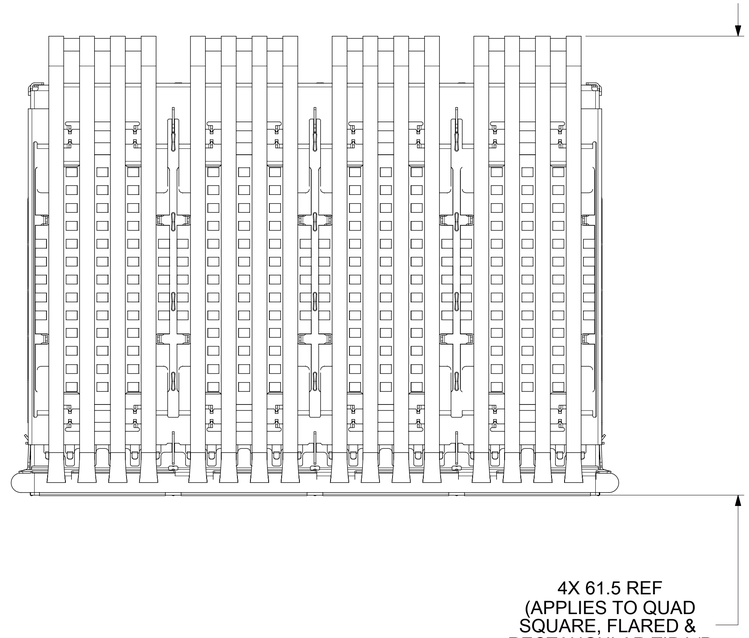

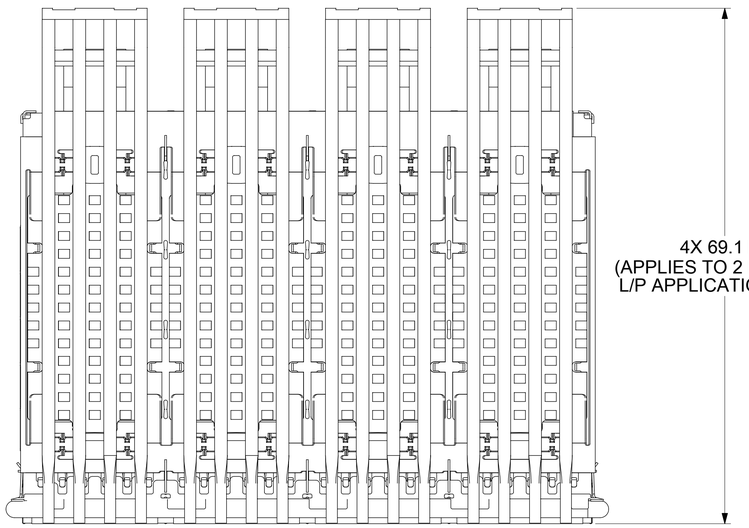

REAR LEG OPTIONS

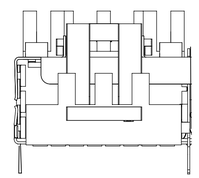

0 REAR LEGS

Partial2
SCALE 3:1

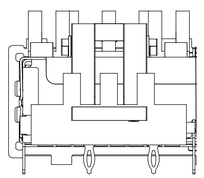

2 REAR LEGS

Partial1
SCALE 3:1

ELASTOMERIC GASKET OPTIONS

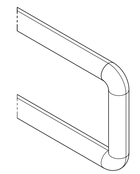

2.6 X 41.0 [0.103 X 1.62 INCH]
ROUND GASKET
Partial3
SCALE 3:1

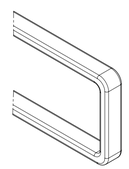

1.25 X 2.49 [0.049 X 0.098 INCH]
LOW PROFILE RECTANGULAR GASKET
Partial4
SCALE 3:1

THIS DRAWING CONTAINS INFORMATION THAT IS PROPRIETARY TO MOLEX ELECTRONIC TECHNOLOGIES, LLC AND SHOULD NOT BE USED WITHOUT WRITTEN PERMISSION

DIMENSION UNITS	mm
SCALE	3.5:1
GENERAL TOLERANCES (UNLESS SPECIFIED)	
ANGULAR TOL	± 1.0 °
4 PLACES	±
3 PLACES	±
2 PLACES	± 0.15
1 PLACE	± 0.25
0 PLACES	±
DRAFT WHERE APPLICABLE MUST REMAIN WITHIN DIMENSIONS	

CURRENT REV DESC: OBSOLETED PART NUMBER AS PER PCN#509451

EC NO: 686785
DRWN: SUGEEB 2021/11/23
CHK'D: GGA 2022/02/28
APPR: GGA 2022/02/28

INITIAL REVISION:
DRWN: SJKG 2017/01/09
APPR: RCHEN08 2019/01/22

molex

QSFP+ 1X4 GANGED CAGE
ASSEMBLIES WITH ELASTOMER GASKET

PRODUCT CUSTOMER DRAWING

DOCUMENT NUMBER	DOC TYPE	DOC PART	REVISION
747690501	PSD	ASY	N1

THIRD ANGLE PROJECTION	DRAWING	SERIES	MATERIAL NUMBER	CUSTOMER	SHEET NUMBER
	D-SIZE	74769	SHT 5, 6, & 7		4 OF 14

DOCUMENT STATUS	P1	RELEASE DATE	2022/02/28 11:54:48

PART NUMBER SELECTION

NO HEAT SINKS
NO LIGHT PIPE

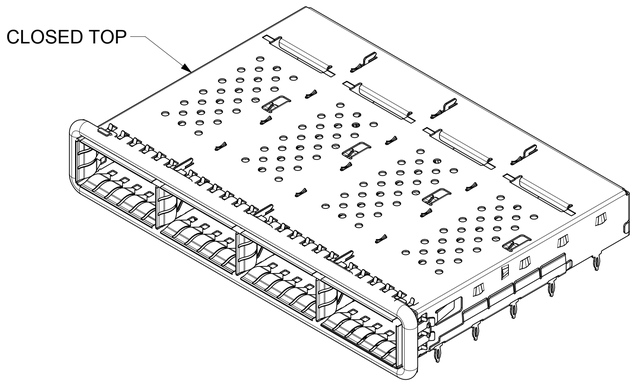

MOLEX P/N	# OF REAR LEGS PER PORT
747690223	2
747690226	0

NO HEAT SINKS
WITH SINGLE LIGHT PIPE

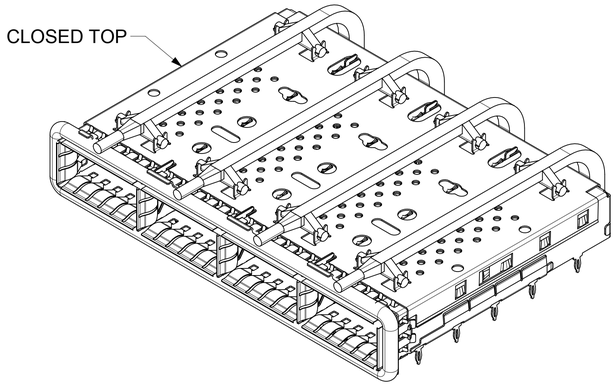

MOLEX P/N	GASKET STYLE	# OF REAR LEGS PER PORT
747690229	ROUND	2
747690230	ROUND	0

NO HEAT SINKS
NO LIGHT PIPE

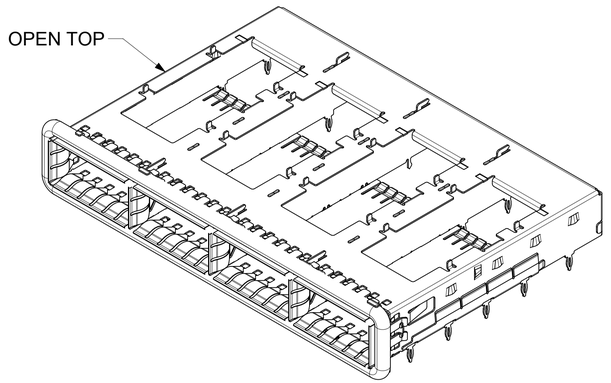

MOLEX P/N	GASKET STYLE	# OF REAR LEGS PER PORT
747690204	SQUARE	0
747690205	SQUARE	2
747690206	ROUND	0
747690207	ROUND	2
747690208	SQUARE	2
747690209	SQUARE	0
747690210	ROUND	0

WITH HEAT SINKS
NO LIGHT PIPE

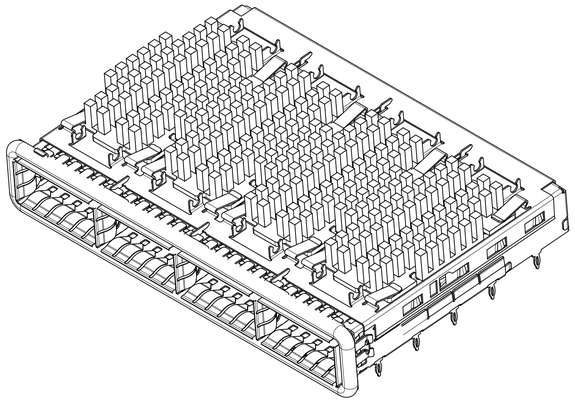

MOLEX P/N	GASKET STYLE	HS	# OF REAR LEGS PER PORT
747690507	ROUND	NET	2
747690516	SQUARE	PCI	2

THIS DRAWING CONTAINS INFORMATION THAT IS PROPRIETARY TO MOLEX ELECTRONIC TECHNOLOGIES, LLC AND SHOULD NOT BE USED WITHOUT WRITTEN PERMISSION

DIMENSION UNITS	SCALE
mm	3.5:1

GENERAL TOLERANCES (UNLESS SPECIFIED)	
ANGULAR TOL	± 1.0 °
4 PLACES	±
3 PLACES	±
2 PLACES	± 0.15
1 PLACE	± 0.25
0 PLACES	±

DRAFT WHERE APPLICABLE MUST REMAIN WITHIN DIMENSIONS

CURRENT REV DESC: OBSOLETED PART NUMBER AS PER PCN#509451

EC NO: 686785
DRWN: SUGEEB 2021/11/23
CHK'D: GGA 2022/02/28
APPR: GGA 2022/02/28

INITIAL REVISION:
DRWN: SJKG 2017/01/09
APPR: RCHEN08 2019/01/22

molex

QSFP+ 1X4 GANGED CAGE ASSEMBLIES WITH ELASTOMER GASKET

PRODUCT CUSTOMER DRAWING

DOCUMENT NUMBER	DOC TYPE	DOC PART	REVISION
747690501	PSD	ASY	N1

THIRD ANGLE PROJECTION	DRAWING	SERIES	MATERIAL NUMBER	CUSTOMER	SHEET NUMBER
	D-SIZE	74769	SHT 5, 6, & 7		5 OF 14

DOCUMENT STATUS	P1	RELEASE DATE	2022/02/28 11:54:48

PART NUMBER SELECTION (CONT.)

SINGLE LIGHT PIPE WITH HEAT SINKS

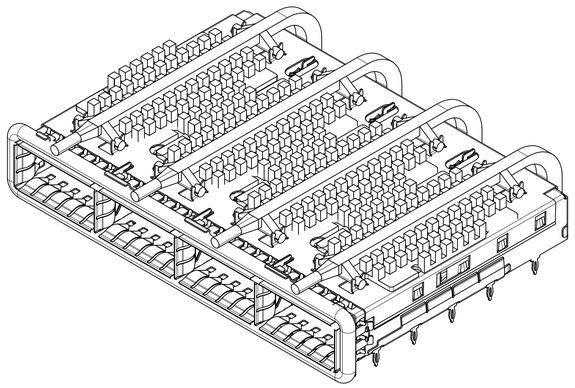

MOLEX P/N	LP	TIP STYLE	HS	# OF REAR LEGS PER PORT	DIM "B"
747690513	SINGLE	ROUND	PCI	2	60.25
747690612	SINGLE	ROUND	PCI	0	60.25

DUAL LIGHT PIPE WITH HEAT SINKS

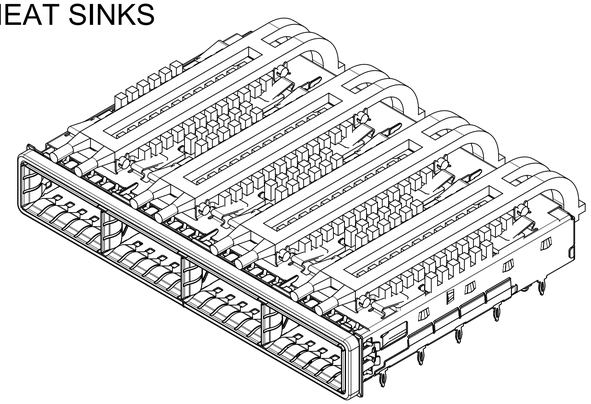

MOLEX P/N	LP	TIP STYLE	GASKET STYLE	HS	# OF REAR LEGS PER PORT	DIM "B"
747690503	DUAL	ROUND	ROUND	SAN	2	60.25
747690511	DUAL	ROUND	ROUND	PCI	2	60.25
747690551	DUAL	ROUND	SQUARE	PCI	2	58.63

QUAD LIGHT PIPE WITH HEAT SINKS

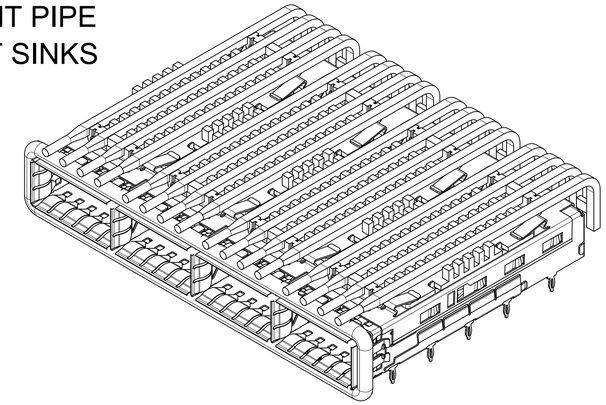

MOLEX P/N	LP	TIP STYLE	GASKET STYLE	HS	# OF REAR LEGS PER PORT	DIM "B"
747690517	QUAD	ROUND	ROUND	PCI	2	60.54
747690537	QUAD	ROUND	SQUARE	PCI	2	60.54
747690538	QUAD	ROUND	SQUARE	SAN	2	60.54
747690539	QUAD	ROUND	SQUARE	NET	2	60.54
747690540	QUAD	ROUND	SQUARE	PCI	0	60.54
747690541	QUAD	ROUND	SQUARE	SAN	0	60.54
747690542	QUAD	ROUND	SQUARE	NET	0	60.54

THIS DRAWING CONTAINS INFORMATION THAT IS PROPRIETARY TO MOLEX ELECTRONIC TECHNOLOGIES, LLC AND SHOULD NOT BE USED WITHOUT WRITTEN PERMISSION

DIMENSION UNITS	SCALE
mm	3.5:1

GENERAL TOLERANCES (UNLESS SPECIFIED)

ANGULAR TOL	±	1.0 °
4 PLACES	±	
3 PLACES	±	
2 PLACES	±	0.15
1 PLACE	±	0.25
0 PLACES	±	

DRAFT WHERE APPLICABLE MUST REMAIN WITHIN DIMENSIONS

CURRENT REV DESC: OBSOLETED PART NUMBER AS PER PCN#509451

EC NO: 686785

DRWN:	SUGEEB	2021/11/23
CHK'D:	GGA	2022/02/28
APPR:	GGA	2022/02/28

INITIAL REVISION:

DRWN:	SJKG	2017/01/09
APPR:	RCHEN08	2019/01/22

THIRD ANGLE PROJECTION | DRAWING: D-SIZE | SERIES: 74769

molex

QSFP+ 1X4 GANGED CAGE ASSEMBLIES WITH ELASTOMER GASKET

PRODUCT CUSTOMER DRAWING

DOCUMENT NUMBER	DOC TYPE	DOC PART	REVISION
747690501	PSD	ASY	N1

MATERIAL NUMBER	CUSTOMER	SHEET NUMBER
SHT 5, 6, & 7		6 OF 14

DOCUMENT STATUS	P1	RELEASE DATE	2022/02/28 11:54:48

PART NUMBER SELECTION (CONT.)

QUAD LIGHT PIPE WITH HEAT SINKS

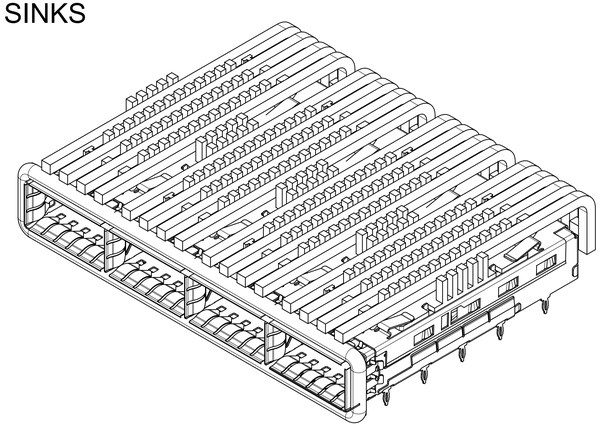

MOLEX P/N	LP	TIP STYLE	HS	# OF REAR LEGS PER PORT	DIM "B"
747690531	QUAD	SQUARE	PCI	2	60.54
747690532	QUAD	SQUARE	SAN	2	60.54
747690533	QUAD	SQUARE	NET	2	60.54
747690534	QUAD	SQUARE	PCI	0	60.54
747690535	QUAD	SQUARE	SAN	0	60.54
747690536	QUAD	SQUARE	NET	0	60.54

QUAD LIGHT PIPE WITH HEAT SINKS

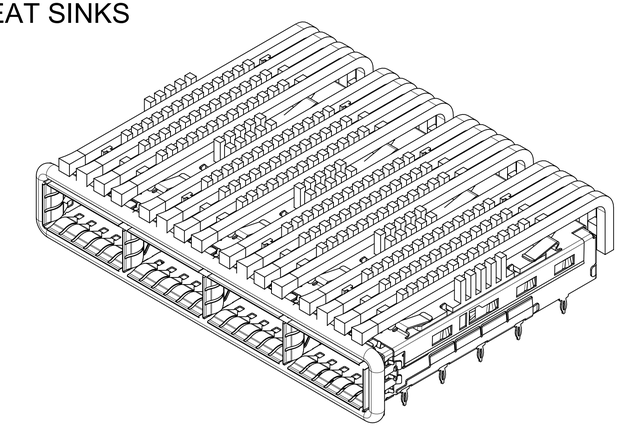

MOLEX P/N	LP	TIP STYLE	GASKET STYLE	HS	# OF REAR LEGS PER PORT	DIM "B"
747690523	QUAD	FLARED	ROUND	PCI	2	60.54
747690525	QUAD	FLARED	ROUND	NET	2	60.54
747690526	QUAD	FLARED	ROUND	PCI	0	60.54
747690527	QUAD	FLARED	ROUND	SAN	0	60.54
747690528	QUAD	FLARED	ROUND	NET	0	60.54
747690543	QUAD	FLARED	SQUARE	PCI	2	60.54
747690544	QUAD	FLARED	SQUARE	SAN	2	60.54
747690545	QUAD	FLARED	SQUARE	NET	2	60.54
747690546	QUAD	FLARED	SQUARE	PCI	0	60.54
747690547	QUAD	FLARED	SQUARE	SAN	0	60.54
747690548	QUAD	FLARED	SQUARE	NET	0	60.54

2 ROW QUAD LIGHT PIPE WITH HEAT SINKS

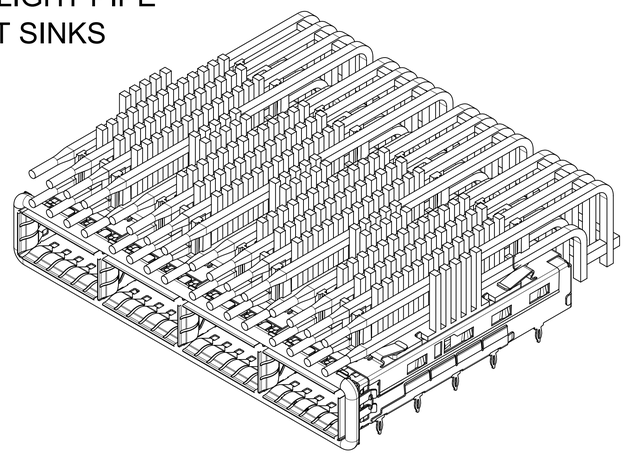

MOLEX P/N	LP	TIP STYLE	GASKET STYLE	HS	# OF REAR LEGS PER PORT	DIM "B"	DIM "C"
747690549	2 ROW QUAD	ROUND	SQUARE	NET	0	60.54	66.78

THIS DRAWING CONTAINS INFORMATION THAT IS PROPRIETARY TO MOLEX ELECTRONIC TECHNOLOGIES, LLC AND SHOULD NOT BE USED WITHOUT WRITTEN PERMISSION

DIMENSION UNITS	mm
SCALE	3.5:1
GENERAL TOLERANCES (UNLESS SPECIFIED)	
ANGULAR TOL	± 1.0 °
4 PLACES	±
3 PLACES	±
2 PLACES	± 0.15
1 PLACE	± 0.25
0 PLACES	±
DRAFT WHERE APPLICABLE MUST REMAIN WITHIN DIMENSIONS	

CURRENT REV DESC: OBSOLETED PART NUMBER AS PER PCN#509451

EC NO: 686785
DRWN: SUGEEB 2021/11/23
CHK'D: GGA 2022/02/28
APPR: GGA 2022/02/28

INITIAL REVISION:
DRWN: SJKG 2017/01/09
APPR: RCHEN08 2019/01/22

THIRD ANGLE PROJECTION | DRAWING: D-SIZE | SERIES: 74769

molex

QSFP+ 1X4 GANGED CAGE ASSEMBLIES WITH ELASTOMER GASKET

PRODUCT CUSTOMER DRAWING

DOCUMENT NUMBER	DOC TYPE	DOC PART	REVISION
747690501	PSD	ASY	N1

MATERIAL NUMBER: SHT 5, 6, & 7 | CUSTOMER | SHEET NUMBER: 7 OF 14

DOCUMENT STATUS	P1	RELEASE DATE	2022/02/28 11:54:48

PCB LAYOUT FOR SINGLE SIDED MOUNTING

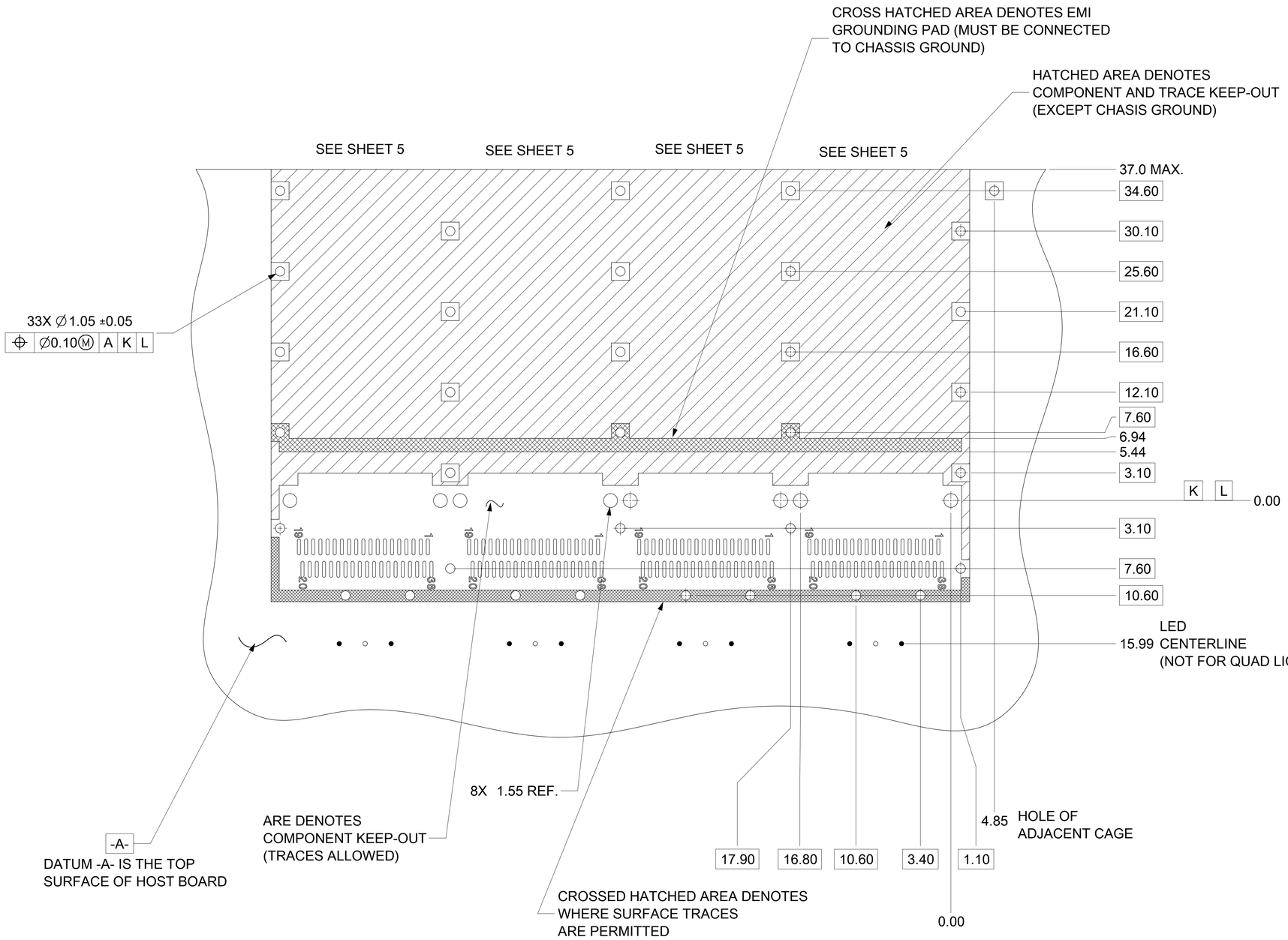

HOST CONNECTOR DETAIL

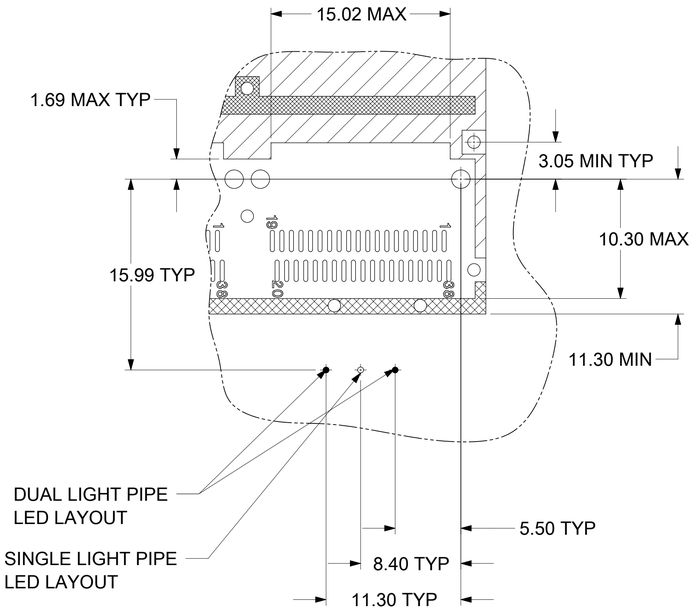

DETAIL 1
SCALE 4:1

NOTES:
1. PADS AND VIAS CONNECT TO CHASSIS GROUND (RECOMMEND PADS TO BE 2.00mm SQUARE)
2. RECOMMENDED THRU HOLE PLATING INCLUES HASL, OSP, OR IMMERSION (GOLD, SILVER, OR TIN).
3. CONNECTOR PAD LAYOUT PER QSFP MSA WILL ACCOMODATE MOLEX CONNECTOR 75586-0010 OR 75586-0011.
4. SINGLE SIDED BOARD THICKNESS:
   NONIMAL: 1.60
   MININUM: 1.44
5. SPACING BETWEEN PORTS IS 19.00.
6. LED SHOULD BE PLACED RELATIVE TO THE QSFP CONNECTOR POST HOLES

DOCUMENT STATUS	P1	RELEASE DATE	2022/02/28 11:54:48

THIS DRAWING CONTAINS INFORMATION THAT IS PROPRIETARY TO MOLEX ELECTRONIC TECHNOLOGIES, LLC AND SHOULD NOT BE USED WITHOUT WRITTEN PERMISSION

DIMENSION UNITS	SCALE
mm	3.5:1

GENERAL TOLERANCES (UNLESS SPECIFIED)

ANGULAR TOL	±	1.0 °
4 PLACES	±	
3 PLACES	±	
2 PLACES	±	0.15
1 PLACE	±	0.25
0 PLACES	±	

DRAFT WHERE APPLICABLE MUST REMAIN WITHIN DIMENSIONS

CURRENT REV DESC: OBSOLETED PART NUMBER AS PER PCN#509451

EC NO: 686785
DRWN: SUGEEB 2021/11/23
CHK'D: GGA 2022/02/28
APPR: GGA 2022/02/28

INITIAL REVISION:
DRWN: SJKG 2017/01/09
APPR: RCHEN08 2019/01/22

molex

QSFP+ 1X4 GANGED CAGE ASSEMBLIES WITH ELASTOMER GASKET

PRODUCT CUSTOMER DRAWING

DOCUMENT NUMBER	DOC TYPE	DOC PART	REVISION
747690501	PSD	ASY	N1

THIRD ANGLE PROJECTION	DRAWING	SERIES	MATERIAL NUMBER	CUSTOMER	SHEET NUMBER
	D-SIZE	74769	SHT 5, 6, & 7		8 OF 14

PCB LAYOUT FOR SINGLE SIDED MOUNTING (CON'T)

FOR QUAD & 2 ROW QUAD LIGHT PIPE ONLY

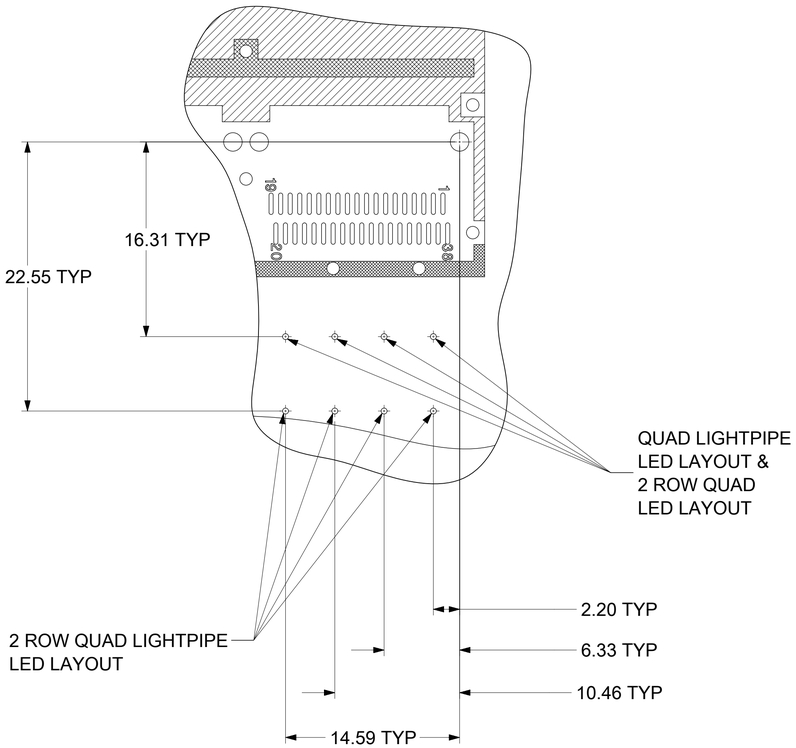

Partial6
SCALE 4:1

FOR QUAD 747500422 LIGHT PIPE ONLY

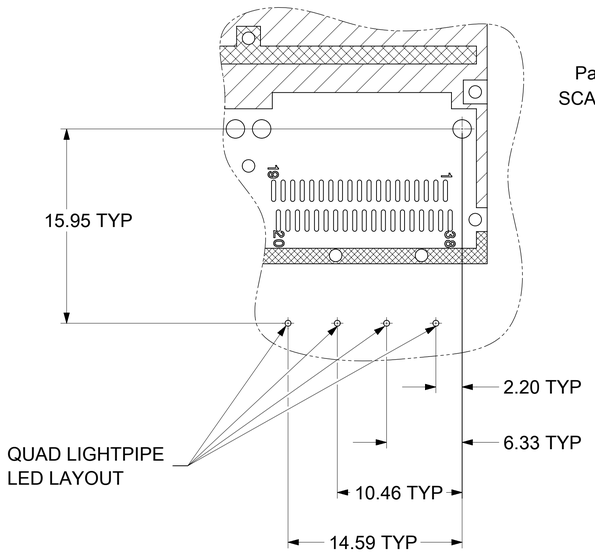

Partial5
SCALE 4:1

THIS DRAWING CONTAINS INFORMATION THAT IS PROPRIETARY TO MOLEX ELECTRONIC TECHNOLOGIES, LLC AND SHOULD NOT BE USED WITHOUT WRITTEN PERMISSION

DIMENSION UNITS	SCALE
mm	3.5:1

GENERAL TOLERANCES (UNLESS SPECIFIED)

ANGULAR TOL	±	1.0 °
4 PLACES	±	
3 PLACES	±	
2 PLACES	±	0.15
1 PLACE	±	0.25
0 PLACES	±	

DRAFT WHERE APPLICABLE MUST REMAIN WITHIN DIMENSIONS

CURRENT REV DESC: OBSOLETED PART NUMBER AS PER PCN#509451

EC NO: 686785
DRWN: SUGEEB 2021/11/23
CHK'D: GGA 2022/02/28
APPR: GGA 2022/02/28

INITIAL REVISION:
DRWN: SJKG 2017/01/09
APPR: RCHEN08 2019/01/22

molex

QSFP+ 1X4 GANGED CAGE
ASSEMBLIES WITH ELASTOMER GASKET

PRODUCT CUSTOMER DRAWING

DOCUMENT NUMBER	DOC TYPE	DOC PART	REVISION
747690501	PSD	ASY	N1

THIRD ANGLE PROJECTION	DRAWING	SERIES	MATERIAL NUMBER	CUSTOMER	SHEET NUMBER
	D-SIZE	74769	SHT 5, 6, & 7		9 OF 14

DOCUMENT STATUS	P1	RELEASE DATE	2022/02/28 11:54:48

PCB LAYOUT FOR BELLY TO BELLY MOUNTING

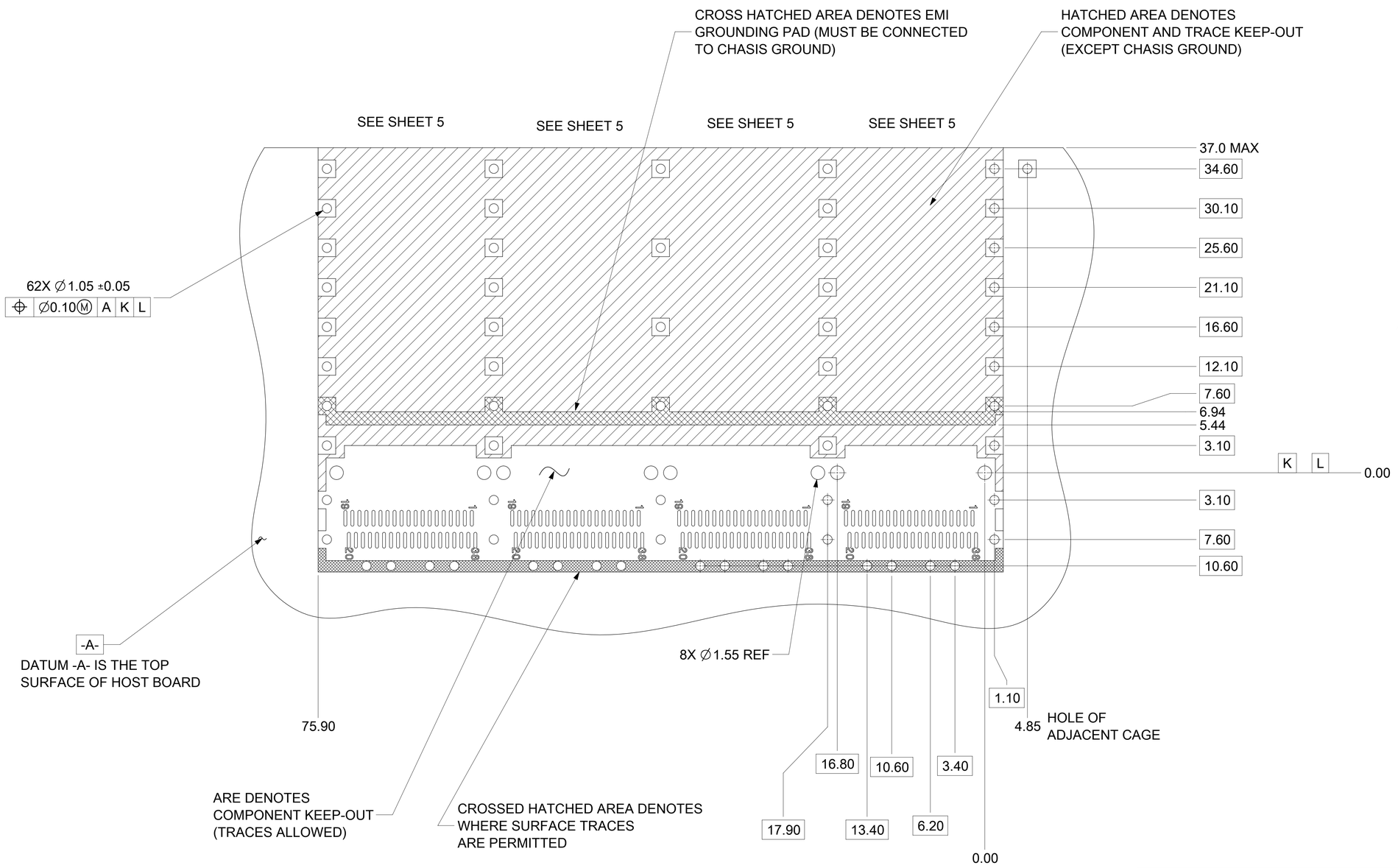

NOTE:
SEE SHEET 8 & 9 FOR HOST CONNECTOR DETAIL AND LED LOCATION DETAILS

NOTES:
1. PADS AND VIAS CONNECT TO CHASSIS GROUND (RECOMMEND PADS TO BE 2.00mm SQUARE)
2. RECOMMENDED THRU HOLE PLATING INCLUES HASL, OSP, OR IMMERSION (GOLD, SILVER, OR TIN).
3. CONNECTOR PAD LAYOUT PER QSFP MSA WILL ACCOMODATE MOLEX CONNECTOR 75586-0010 OR 75586-0011.
4. BELLY TO BELLY BOARD THICKNESS:
   NONIMAL: 2.90
   MININUM: 2.48
5. SPACING BETWEEN PORTS IS 19.00.

DOCUMENT STATUS	P1	RELEASE DATE	2022/02/28 11:54:48

THIS DRAWING CONTAINS INFORMATION THAT IS PROPRIETARY TO MOLEX ELECTRONIC TECHNOLOGIES, LLC AND SHOULD NOT BE USED WITHOUT WRITTEN PERMISSION

DIMENSION UNITS	SCALE
mm	3.5:1

GENERAL TOLERANCES (UNLESS SPECIFIED)

ANGULAR TOL	±	1.0 °
4 PLACES	±	
3 PLACES	±	
2 PLACES	±	0.15
1 PLACE	±	0.25
0 PLACES	±	

DRAFT WHERE APPLICABLE MUST REMAIN WITHIN DIMENSIONS

CURRENT REV DESC: OBSOLETED PART NUMBER AS PER PCN#509451

EC NO: 686785
DRWN: SUGEEB 2021/11/23
CHK'D: GGA 2022/02/28
APPR: GGA 2022/02/28

INITIAL REVISION:
DRWN: SJKG 2017/01/09
APPR: RCHEN08 2019/01/22

molex

QSFP+ 1X4 GANGED CAGE ASSEMBLIES WITH ELASTOMER GASKET

PRODUCT CUSTOMER DRAWING

DOCUMENT NUMBER	DOC TYPE	DOC PART	REVISION
747690501	PSD	ASY	N1

THIRD ANGLE PROJECTION	DRAWING	SERIES	MATERIAL NUMBER	CUSTOMER	SHEET NUMBER
	D-SIZE	74769	SHT 5, 6, & 7		10 OF 14

BOARD POSITION AND BEZEL DIMENSIONS FOR BELLY TO BELLY MOUNTING

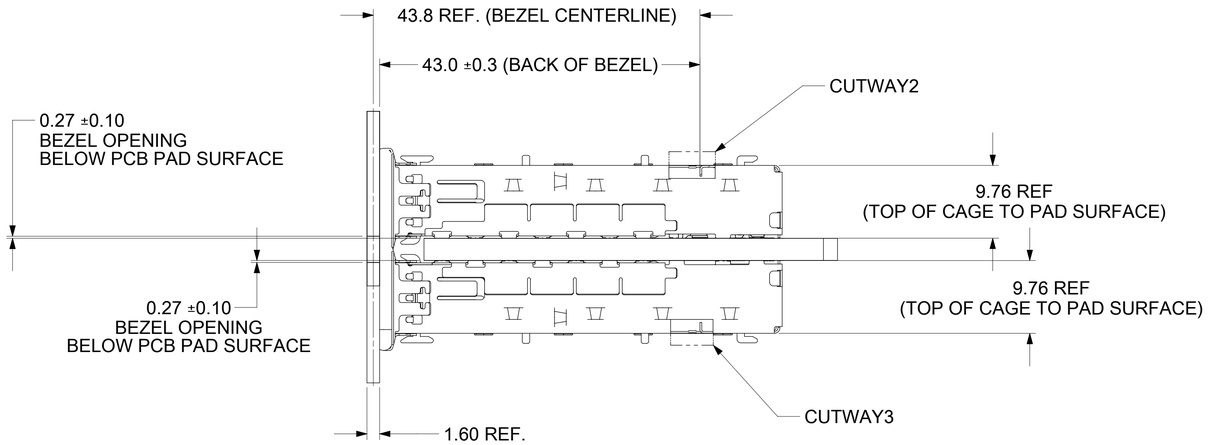

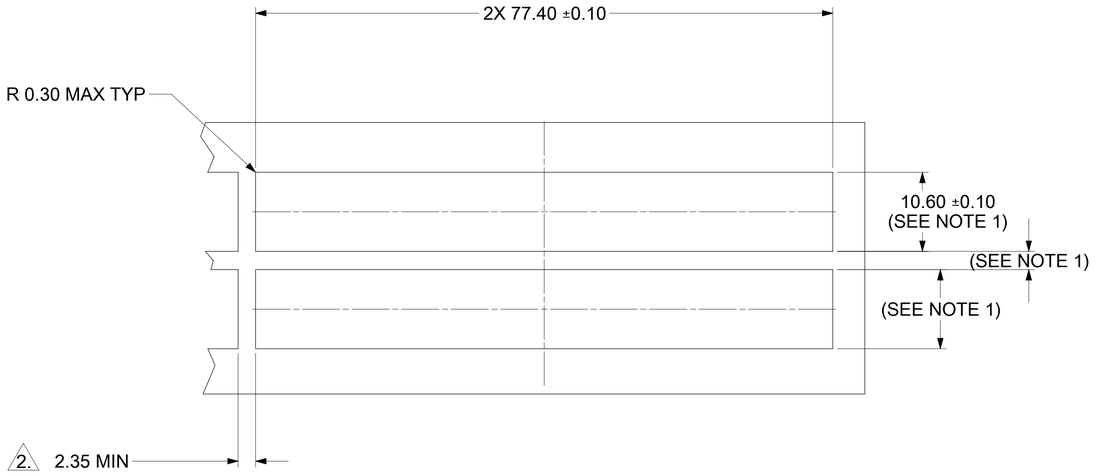

NOTES:
1. PCB THICKNESS VARIATION MUST BE CONSIDERED WHEN DETERMINING BEZEL OPENING, SIZE, AND LOCATION
2. DURING FINAL INSPECTION, CAGE LEG LOCATIONS AND STRAIGHTNESS MUST BE CHECKED USING APPROPRIATE GO - NO GO GAGE

DOCUMENT STATUS	P1	RELEASE DATE	2022/02/28	11:54:48

BOARD POSITION AND BEZEL DIMENSIONS FOR SINGLE SIDE MOUNTING

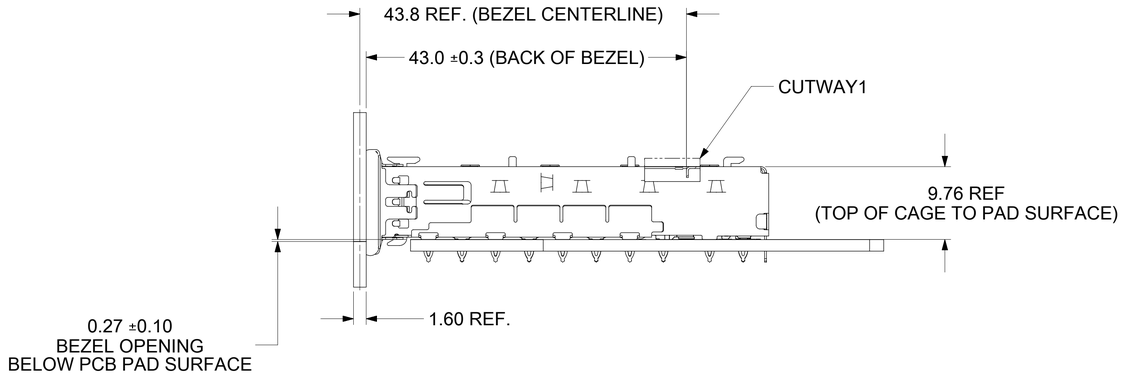

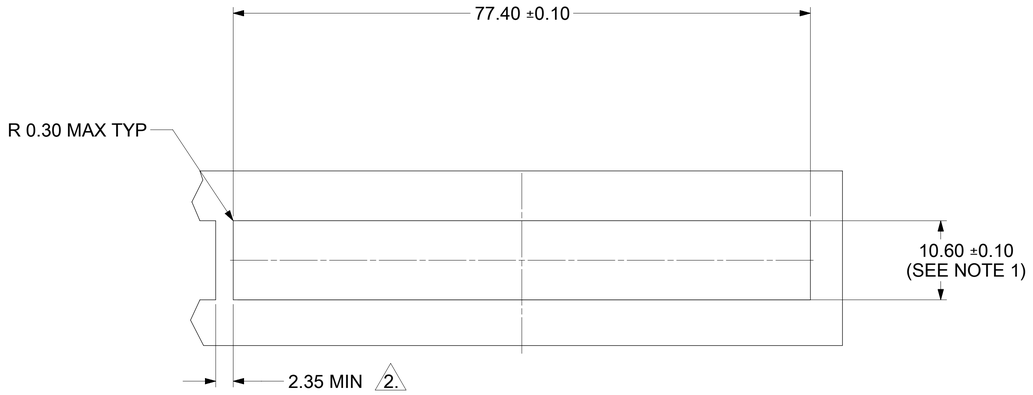

THIS DRAWING CONTAINS INFORMATION THAT IS PROPRIETARY TO MOLEX ELECTRONIC TECHNOLOGIES, LLC AND SHOULD NOT BE USED WITHOUT WRITTEN PERMISSION

DIMENSION UNITS	SCALE
mm	3.5:1

GENERAL TOLERANCES (UNLESS SPECIFIED)

ANGULAR TOL	±	1.0 °
4 PLACES	±	
3 PLACES	±	
2 PLACES	±	0.15
1 PLACE	±	0.25
0 PLACES	±	

DRAFT WHERE APPLICABLE MUST REMAIN WITHIN DIMENSIONS

CURRENT REV DESC: OBSOLETED PART NUMBER AS PER PCN#509451

EC NO:	686785	
DRWN:	SUGEEB	2021/11/23
CHK'D:	GGA	2022/02/28
APPR:	GGA	2022/02/28

INITIAL REVISION:

DRWN:	SJKG	2017/01/09
APPR:	RCHEN08	2019/01/22

molex

QSFP+ 1X4 GANGED CAGE ASSEMBLIES WITH ELASTOMER GASKET

PRODUCT CUSTOMER DRAWING

DOCUMENT NUMBER	DOC TYPE	DOC PART	REVISION
747690501	PSD	ASY	N1

THIRD ANGLE PROJECTION	DRAWING	SERIES	MATERIAL NUMBER	CUSTOMER	SHEET NUMBER
	D-SIZE	74769	SHT 5, 6, & 7		11 OF 14

LIGHTPIPE CUTOUT DIMENSIONS

SINGLE LIGHT PIPE

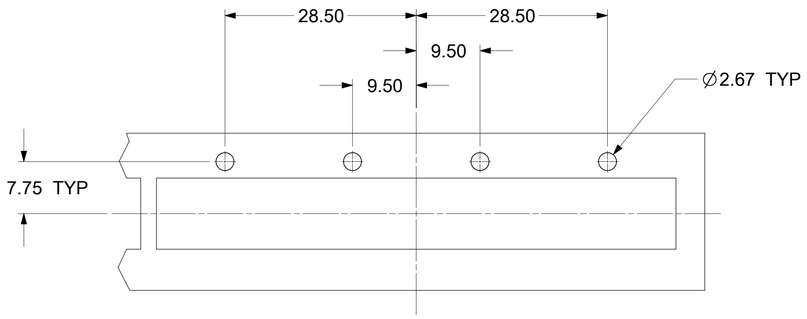

DUAL LIGHT PIPE

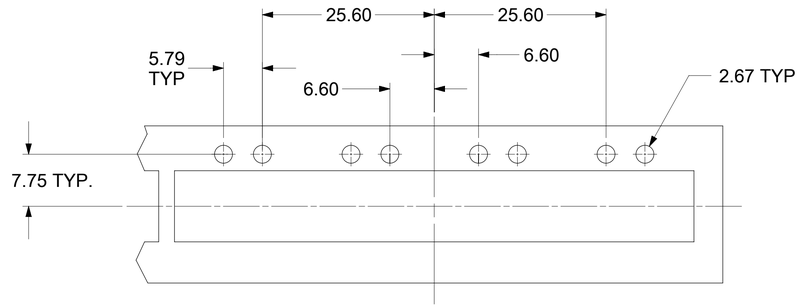

QUAD LIGHT PIPE (ROUND)

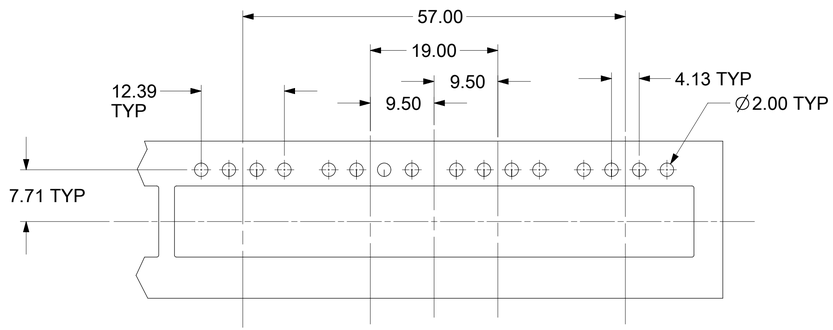

QUAD LIGHT PIPE (SQUARE)

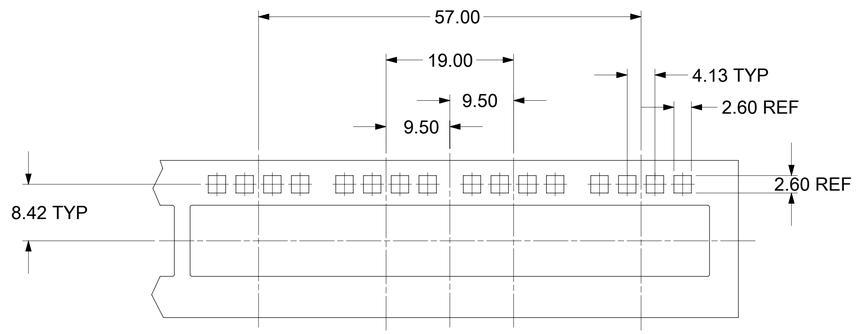

QUAD LIGHT PIPE (RECTANGULAR)

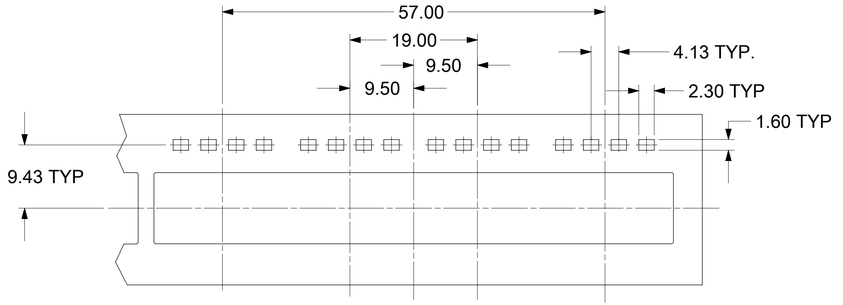

2 ROW QUAD LIGHT PIPE

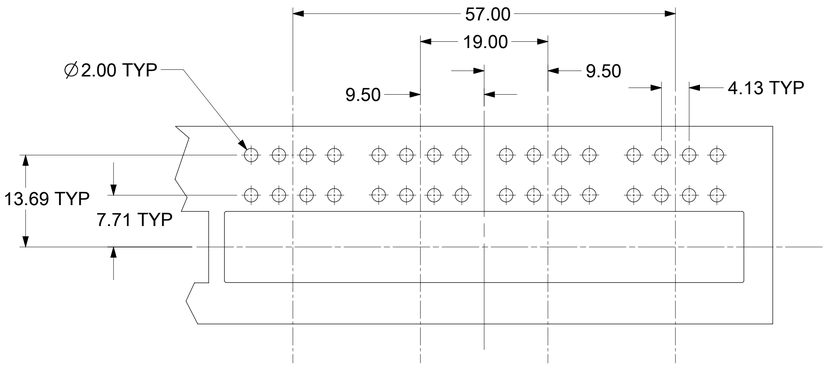

NOTES:
1. PCB THICKNESS VARIATION MUST BE CONSIDERED WHEN DETERMINING BEZEL OPENING, SIZE, AND LOCATION

DOCUMENT STATUS	P1	RELEASE DATE	2022/02/28	11:54:48

THIS DRAWING CONTAINS INFORMATION THAT IS PROPRIETARY TO MOLEX ELECTRONIC TECHNOLOGIES, LLC AND SHOULD NOT BE USED WITHOUT WRITTEN PERMISSION

DIMENSION UNITS	SCALE
mm	3.5:1

GENERAL TOLERANCES (UNLESS SPECIFIED)		
ANGULAR TOL	±	1.0 °
4 PLACES	±	
3 PLACES	±	
2 PLACES	±	0.15
1 PLACE	±	0.25
0 PLACES	±	

DRAFT WHERE APPLICABLE MUST REMAIN WITHIN DIMENSIONS

CURRENT REV DESC: OBSOLETED PART NUMBER AS PER PCN#509451

EC NO: 686785

DRWN:	SUGEEB	2021/11/23
CHK'D:	GGA	2022/02/28
APPR:	GGA	2022/02/28

INITIAL REVISION:

DRWN:	SJKG	2017/01/09
APPR:	RCHEN08	2019/01/22

THIRD ANGLE PROJECTION | DRAWING: D-SIZE | SERIES: 74769

molex

QSFP+ 1X4 GANGED CAGE ASSEMBLIES WITH ELASTOMER GASKET

PRODUCT CUSTOMER DRAWING

DOCUMENT NUMBER	DOC TYPE	DOC PART	REVISION
747690501	PSD	ASY	N1

MATERIAL NUMBER	CUSTOMER	SHEET NUMBER
SHT 5, 6, & 7		12 OF 14

DATE	REV	DESCRIPTION
2011/05/03	A	1) INITIAL RELEASE
2012/11/21	B	SHT1: ADDED P/N 747690514 AND 747690515 TO CHART. SHT1: ADDED DIM "B" IN.
2013/06/03	C	SHT1: CHANGED 5.39 TYP TO; 5.39 REF (TO CENTER OF LEG). SHT1: ADDED P/N'S 747690508, 747690509 AND 747690516 TO CHART. SHT2: MOVED DIM 15.99 FROM DETAIL 1 TO MAIN BOARD VIEW. SHT1: REARRANGED VIEWS AND MANAGED OUT PARTS TO ADD CAGES WITHOUT HEATSINKS AND LIGHT PIPES. MOVED LIGHT PIPE DIMENSIONS FROM FRONT VIEW TO SHT 3. ADDED ISO VIEW TO SHOW UNDERBELLY EMI FINGERS AND REAR LEGS. ADDED SHEET TITLE "CAGE DETAILS" WITH P/N SHOWN. MOVED P/N TABLE TO SHT 4. MOVED HEATSINK HEIGHT TABLE TO SHT 2. ADDED DIMS FOR GASKET FRAME. REMOVED NOTES 3, 4, AND 7. CHANGED NOTE 1 TO READ QSFP+ ASSEMBLES ALSO AVAILABLE AND 1X1 (74750 SERIES), 1X2 (74767 SERIES), 1X3 (74768 SERIES), AND 1X6 (74771 SERIES) CONFIGURATIONS. ADDED NICKEL TO CAGE MATERIAL NOTE. SHT2: MOVED ALL VIEWS AND NOTES TO SHT 5. ADDED RIGHT SIDE VIEW AND VIEWS OF SINGLE AND DUAL HEATSINKS. ADDED TOL TO TABLE. SHT3: MOVED SHT 3 TO NEW SHT 6. ADDED TOP VIEW AND VIEWS OF SINGLE AND DUAL LIGHT PIPES. ADDED BACK VIEWS TO SHOW REAR LEG OPTIONS. ADDED ISO VIEWS TO SHOW ELASTOMERIC OPTIONS. SHT4: MOVED SHT 3 TO NEW SHT 7. ADDED ISO VIEWS TO SHOW CAGE ASSEMBLY OPTIONS. CHANGED THE P/N TABLE TO INDIVIDUAL TABLES SHOWING OPTIONS FOR NO HEATSINK AND LIGHT PIPES, NO LIGHT PIPES, AND HEATSINKS AND LIGHT PIPES. SHT5: MOVED REV HISTORY TO NEW SHT 9. SHT7: ADDED THE WORD "PAD" TO NOTE "BELOW PCB SURFACE" @I18, J18, AND I8. REMOVED DIM 10.60 +/- 0.10 @E12. SHT8: ADDED SHT 8 WITH BEZEL LIGHTPIPE CUTOUT POSITIONS DIMENSIONS. REMOVED DIM 10.60 +/- 0.10 D12 AND I12.
2013/08/08	D	SHT1: CHANGED FIXED TEXT @F20 & E16 TO READ RECTANGULAR INSTEAD OF SQUARE. SHT3: CORRECTED DIMENSIONS LISTED FOR THE ELASTOMER GASKETS. SHT4: ADDED P/N 747690217 TO TABLE @H11. ADDED NOTE "USES LOW PROFILE RECTANGULAR GASKET" @H11 & C17. ALIGNED THE ISO VIEWS AND TABLES. SHT5: ALIGNED TEXT "HOLE OF ADJACENT CAGE" TO CORRESPONDING DIM 4.85. ADDED TEXT HOST CONNECTOR DETAIL @C3. SHT7: ADDED REF & "TOP OF CAGE TO PAD SURFACE TO DIMS 9.76 @J12, I12, & J2. SHT8: REMOVED MULTIPLIER FROM DIM 5.79 AND MADE IT TYP @F17.
2013/08/09	E	SHT4: REMOVED LIGHTPIPE OPTION FROM P/N'S 747690514 & 747690516. MOVED P/N'S TO TABLE WITH HEATSINK NO LIGHTPIPE.
2013/09/02	F	SHT1: CHANGED TITLE TO READ "BASE CAGE DETAILS" @M10. REMOVED P/N AND "SHOWN" FROM TITLE. REMOVED NOTE LIGHT PIPE REMOVED FOR CLARITY @F4. ADDED NOTE "INNER SPRING FINGERS HAVE BEEN REMOVED FOR CLARITY" @D16. SHT2: DIM 16.0 REF WAS BROUGHT OUT TO TWO DECIMAL PLACES AND IS NOW 15.99 REF @L15. SHT3: REMOVED P/N AND "SHOWN" FROM TITLE @L10. SHT4: HEATSINK AND LIGHT PIPE CLIP WERE MISSING FROM VIEWS @K4 & E4 AND WERE MANAGED INTO THE VIEWS. SHT5: CHANGED MULTIPLIER FOR DIAMETER DIM 1.05 +/-0.05 FROM X34 TO X33 @H20. SHT6: CHANGED MULTIPLIER FOR DIAMETER DIM 1.05 +/-0.05 FROM X68 TO X62 @I18.
2013/12/19	G	SHT2: ADDED PCI, SAN AND NET HEATINKS FOR QUAD LIGHT PIPES. SHT3: ADDED QUAD LIGHT PIPE. SHT4: ADDED ISO VIEW OF QUAD LIGHT PIPE ASSEMBLY AND P/N'S 747680517 THRU 0522 TO CHART. SHT5: ADDED VIEW OF QUAD LIGHT PIPE LED LAYOUT. SHT8: ADDED VIEWS FOR SINGLE AND BELLY TO BELLY BEZEL FOR QUAD LIGHT PIPES.
2014/02/11	H	SHT 1: CORRECTED GASKET DIMENSIONS FOR FRONT VIEW.SHT1: CORRECTED GASKET DIMENSIONS FOR FRONT VIEW. SHT2: CHANGED NOTE: 1) FOR LIGHT PIPE OPTIONS SEE SHEET 3 TO; 1) FOR LIGHT PIPE OPTIONS SEE SHEET 4. REMOVED DIMENSIONS DIM "B" (SEE SHEET 6) CHANGED DIMENSION 22.55 REF TO; 22.55 +/-0.25 AND 16.31 REF TO; 16.31 +/-0.25. REMOVED TOLERANCE COLUMN FROM HEATSINK HEIGHT OPTIONS CHART AND CHANGED DIM "A" TO; DIM "A" MAX. SHT3: ADDED QUAD LIGHT PIPE (WITH SQUARE TIPS), QUAD LIGHT PIPE (WITH FLARED TIPS) AND 2 ROW LIGHT PIPE (ROUND TIPS). MOVED ALL OTHER VIEWS, LEG OPTIONS AND GASKET OPTIONS AND NOTE: 1 TO SHEET 4. SHT7: REMOVED DIM "B" COLUMN FROM P/N'S 747690529 & 0530 AND ADDED P/N'S 747690429 & 0550. ADDED VIEWS AND PART NUMBERS FOR QUAD ASSEMBLIES WITH SQUARE, FLARED TIP OR 2 ROW QUAD LIGHT PIPES SHT8: CHANGED TEXT LED CENTERLINE TO, LED CENTERLINE (NOT FOR QUAD LIGHT PIPES). ADDED LED LOCATIONS FOR THE 2 ROW QUAD TO VIEW PARTIAL 6. ADDED NEW NOTE 4 AND CHANGED HOLE PATTERN NOTE FROM "HOLE PATTERN REPEATS FOR EACH PORT. SPACING BETWEEN PORTS IS 19.00 TO; SPACING BETWEEN PORTS IS 19.00. SHT9: ADDED NEW NOTE 4 AND CHANGED HOLE PATTERN NOTE FROM "HOLE PATTERN REPEATS FOR EACH PORT. SPACING BETWEEN PORTS IS 19.00 TO; SPACING BETWEEN PORTS IS 19.00. SHT10: REMOVED NOTE 2. SHT11: REMOVED NOTE 2 AND ALL BELLY TO BELLY BEZELS. ADDED SQUARE AND 2 ROW BEZELS.
2014/07/22	J	SHT3: UPDATED 2 ROW QUAD LIGHT PIPE VIEW. SHT4: UPDATED 2 ROW QUAD TOP VIEW AND ADDED CUTAWAY VIEW. SHT5: ADDED ISO OF CLOSED TOP WITH SINGLE LP AND ASSOCIATED PART NUMBERS. ADDED P/N'S 747680204, 0205, 0206 & 0207 TO NO HEATSINKS/ NO LIGHT PIPES CHART. SHT7: UPDATED 2 ROW QUAD LIGHT PIPE WITH HEATSINKS VIEW.

THIS DRAWING CONTAINS INFORMATION THAT IS PROPRIETARY TO MOLEX ELECTRONIC TECHNOLOGIES, LLC AND SHOULD NOT BE USED WITHOUT WRITTEN PERMISSION

DIMENSION UNITS	mm
SCALE	3.5:1
GENERAL TOLERANCES (UNLESS SPECIFIED)	
ANGULAR TOL	± 1.0 °
4 PLACES	±
3 PLACES	±
2 PLACES	± 0.15
1 PLACE	± 0.25
0 PLACES	±
DRAFT WHERE APPLICABLE MUST REMAIN WITHIN DIMENSIONS	

CURRENT REV DESC: OBSOLETED PART NUMBER AS PER PCN#509451

EC NO: 686785
DRWN: SUGEEB 2021/11/23
CHK'D: GGA 2022/02/28
APPR: GGA 2022/02/28

INITIAL REVISION:
DRWN: SJKG 2017/01/09
APPR: RCHEN08 2019/01/22

THIRD ANGLE PROJECTION | DRAWING: D-SIZE | SERIES: 74769 | MATERIAL NUMBER: SHT 5, 6, & 7 | CUSTOMER | SHEET NUMBER: 13 OF 14

molex

QSFP+ 1X4 GANGED CAGE ASSEMBLIES WITH ELASTOMER GASKET

PRODUCT CUSTOMER DRAWING

DOCUMENT NUMBER	DOC TYPE	DOC PART	REVISION
747690501	PSD	ASY	N1

DOCUMENT STATUS	P1	RELEASE DATE	2022/02/28 11:54:48

DATE	REV	DESCRIPTION
2014/09/10	J	SHT2: REVISED DIM "B"(SEE SHEET 6) TO: DIM "B"(SEE SHEET 5, 6 & 7) SHT3: ADDED ISO VIEW OF QUAD LIGHT PIPE WITH RECTANGULAR TIP. SHT4: UPDATED DIM 4X 62.9 REF (APPLIES TO SINGLE QUAD L/P APPLICATIONS ONLY) TO; 4X 62.9 REF (APPLIES TO SINGLE QUAD L/P APPLICATIONS ONLY) (EXCEPT 747690561). CORRECTED TEXT FROM 2.6 X 41.0 ROUND GASKET TO; 2.6 X 41.0 ROUND GASKET SHT7: ADDED ISO VIEW AND P/N WITH DESCRIPTION FOR 747690561. SHT9: MOVED DETAIL VIEW FOR QUAD & 2 ROW QUAD LIGHT PIPES FROM SHT 8 TO; SHT 9. ADDED DETAIL VIEW FOR PCB USING 747500422 LIGHT PIPE. SHT12: ADDED BEZEL VIEW FOR QUAD LIGHT PIPE WITH RECTANGULAR TIP LED HOLES.
2014/11/14	K	SHT2: ADDED VIEW FOR ASSEMBLY W/ SINGLE QUAD LIGHT PIPE. REVISED DIM "B" (SEE SHEET 5, 6 & 7) TO; DIM "B" (SEE SHEET 5 & 6) @M18. SHT3: ADDED VIEW AND CHART FOR LED CLEARANCE. SHT4: ADDED VIEWS FOR ASSEMBLIES USING ROUND TIP QUAD LIGHT PIPE AND SQUARE/ FLARED/ RECTANGULAR TIP LIGHT PIPES. SHT7: ADDED DIM "B" & "C" COLUMNS TO CHART FOR 2 ROW QUAD LIGHT PIPE WITH HEAT SINKS ASSEMBLIES. SHT10: CHANGED NOTE: SEE PREVIOUS SHEET FOR HOST CONNECTOR DETAIL AND LED LOCATION DETAILS TO; NOTE: SEE SHEET 8 & 9 FOR HOST CONNECTOR DETAIL AND LED LOCATION DETAILS
2014/12/18	L	SHT6: ADDED P/N 747690551 TO CHART.
2015/07/01	M	SHT6: ADDED GASKET STYLE COLUMN AND REVISED TIP STYLE COLUMN NOTE: "WAS" SQUARE. "NOW READS" ROUND @H11.
2019/01/19	N	REMASTERED FROM SD-74769-0501 REV_M TO 747690501 PSD ASY REV_N IN NX. SHEET 7:K16 : DELETED THE ISO VIEW OF 747690561 P/N.
2021/1/23	N1	SHT5,6 AND 7 :REMOVED OBSOLETED PART NUMBERS: 747690508,747690509,747690512,747690514,747690518,747690519,747690520,747690521,747690522,747690524,747690529,747690530,747690550,747690601,747690602,747690603,747690604,747690605,747690606,747690607,747690502,747690611

THIS DRAWING CONTAINS INFORMATION THAT IS PROPRIETARY TO MOLEX ELECTRONIC TECHNOLOGIES, LLC AND SHOULD NOT BE USED WITHOUT WRITTEN PERMISSION

DIMENSION UNITS	SCALE
mm	3.5:1

GENERAL TOLERANCES (UNLESS SPECIFIED)

ANGULAR TOL	±	1.0 °
4 PLACES	±	
3 PLACES	±	
2 PLACES	±	0.15
1 PLACE	±	0.25
0 PLACES	±	

DRAFT WHERE APPLICABLE MUST REMAIN WITHIN DIMENSIONS

CURRENT REV DESC: OBSOLETED PART NUMBER AS PER PCN#509451

EC NO: 686785

DRWN:	SUGEEB	2021/11/23
CHK'D:	GGA	2022/02/28
APPR:	GGA	2022/02/28

INITIAL REVISION:

DRWN:	SJKG	2017/01/09
APPR:	RCHEN08	2019/01/22

molex

QSFP+ 1X4 GANGED CAGE ASSEMBLIES WITH ELASTOMER GASKET

PRODUCT CUSTOMER DRAWING

DOCUMENT NUMBER	DOC TYPE	DOC PART	REVISION
747690501	PSD	ASY	N1

THIRD ANGLE PROJECTION	DRAWING	SERIES	MATERIAL NUMBER	CUSTOMER	SHEET NUMBER
	D-SIZE	74769	SHT 5, 6, & 7		14 OF 14

DOCUMENT STATUS	P1	RELEASE DATE	2022/02/28 11:54:48

MM 3D MODEL: EM-74769-0231

BASE CAGE DETAILS

LIGHTPIPE/HEATSINK/CLIP NOT SHOWN FOR CLARITY

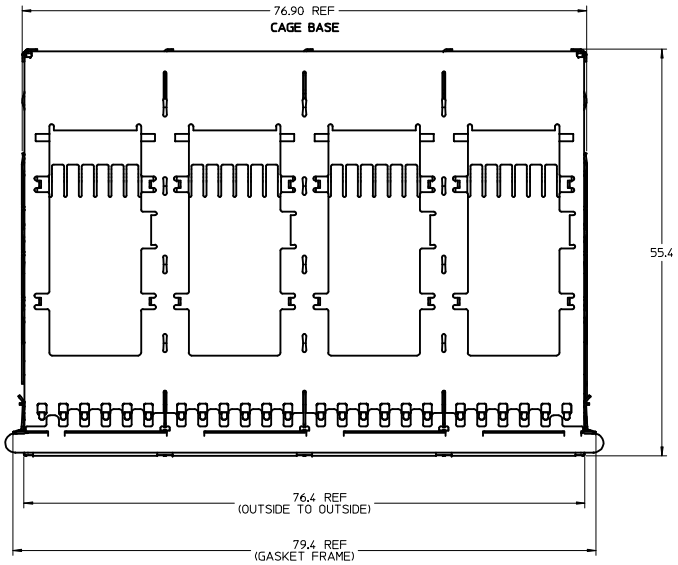

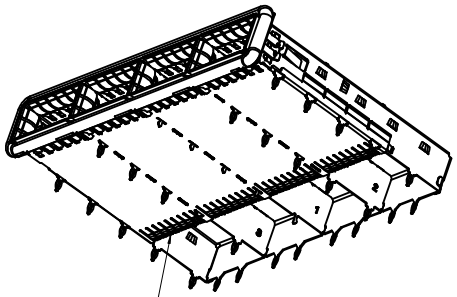

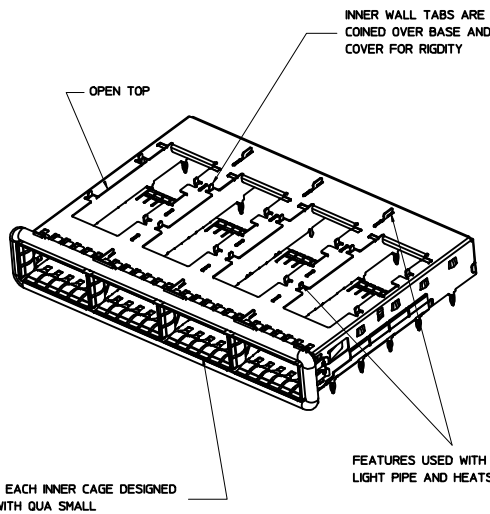

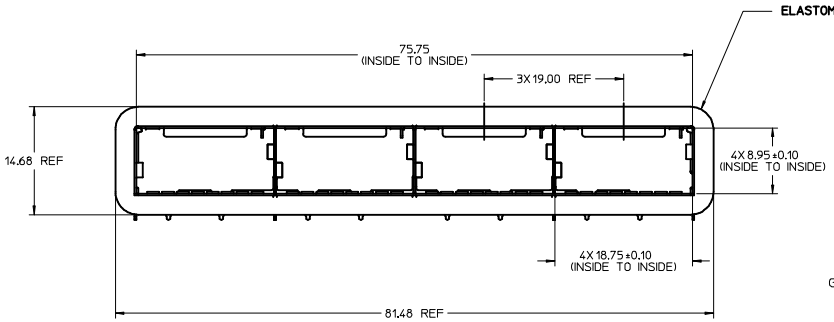

(INNER SPRING FINGERS NOT SHOWN FOR CLARITY)

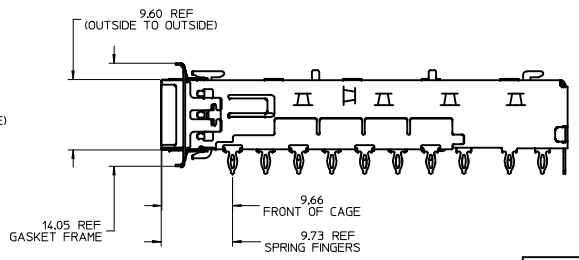

(ELASTOMER GASKET REMOVED FOR CLARITY)

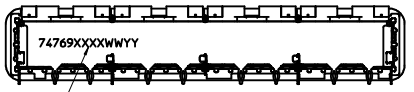

PART NO. AND WEEK/YEAR DATE CODE TO BE PRINTED ON BACK OF COMPLETED CAGE ASSEMBLY APPROXIMATELY AS SHOWN. SEE TABLE BELOW FOR DATE CODE INFORMATION.

WEEK/YEAR DATE CODE TABLE	
WW	01 THRU 52 OR 53 EXAMPLE: 01 = FIRST WEEK OF YEAR 52 = LAST WEEK OF YEAR
YY	15, 16, 17 ETC. EXAMPLE: YEAR 2015 = 15

NOTES:
1. MATERIAL:
   - LIGHT PIPE/HEATSINK CLIP: STAINLESS STEEL
   - LIGHT PIPES: POLYCARBONATE (94-V0 RATED)
   - HEAT SINKS: ANNODIZED ALUMINUM
   - CAGE: NICKEL COPPER ALLOY
2. NO RoHS EXEMPTIONS
3. CUSTOM HEATSINKS AVAILABLE UPON REQUEST

SEE REV HISTORY
EC NO: CPG2016-1437 2015/10/07
DRWN:DSUN15 2015/10/07
CHKD:RCHEN08 2015/10/22
APPR:RCHEN08 DESCRIPTION
B REV

QUALITY SYMBOLS
▽=0
▽=0
▽=0

GENERAL TOLERANCES (UNLESS SPECIFIED)

	mm	INCH
4 PLACES	± ---	± ---
3 PLACES	± ---	± ---
2 PLACES	± 0.15	± ---
1 PLACE	± 0.25	± ---
0 PLACE	± ---	± ---

ANGULAR ± 1 °

DRAFT WHERE APPLICABLE MUST REMAIN WITHIN DIMENSIONS

DIMENSION STYLE: MM ONLY
SCALE: 2:1
DESIGN UNITS: METRIC
THIRD ANGLE PROJECTION

		DATE
DRAWN BY	DSUN15	2015/05/05
CHECKED BY	RCHEN08	2015/05/05
APPROVED BY	RCHEN08	2015/05/27

TITLE: QSFP+ 1X4 GANGED CAGE ASSEMBLIES WITH ELASTOMER GASKET

molex

MATERIAL NO. 747690231
DOCUMENT NO. RSD-74769-0231
SHEET NO. 1 OF 5
SIZE D

THIS DRAWING CONTAINS INFORMATION THAT IS PROPRIETARY TO MOLEX INCORPORATED AND SHOULD NOT BE USED WITHOUT WRITTEN PERMISSION

CAGE ASSEMBLY W/ HETA SINK AND LIGHT PIPE

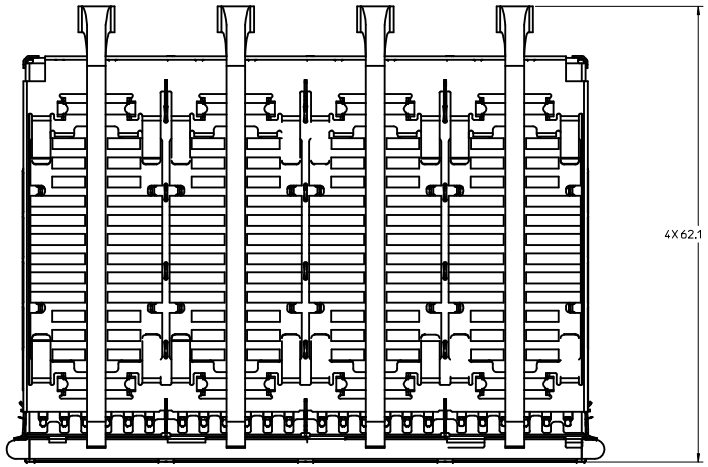

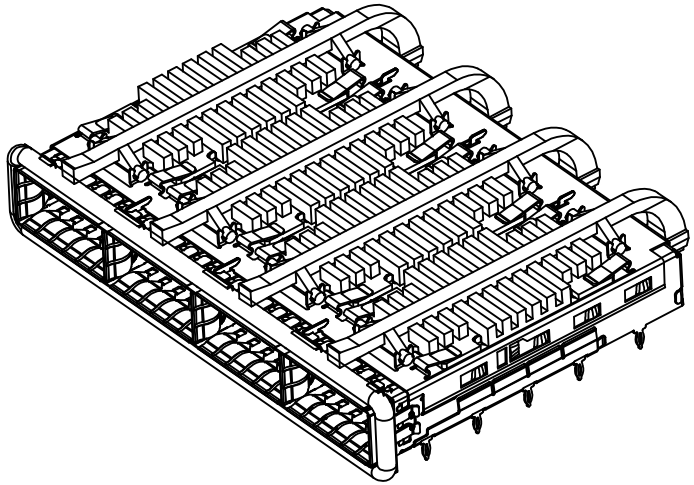

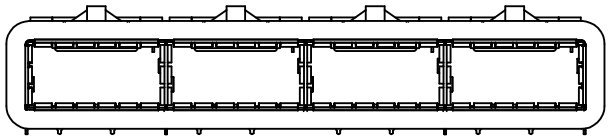

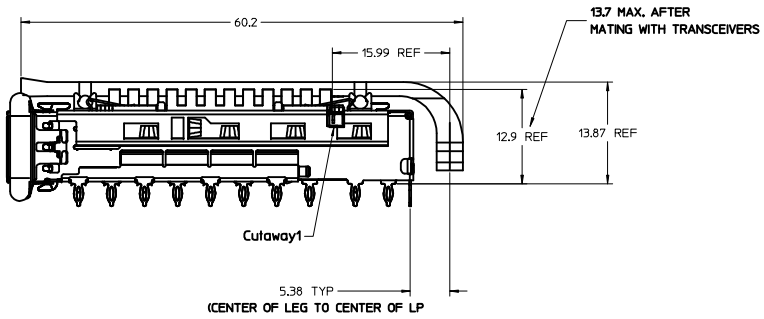

SEE REV HISTORY			
EC NO: CPG2016-1437			
DRWN:DSUN15	2015/10/07		
CHKD:RCHEN08	2015/10/07		
APPR:RCHEN08	2015/10/22		
REV	DESCRIPTION		
B			

QUALITY SYMBOLS	GENERAL TOLERANCES (UNLESS SPECIFIED)		
		mm	INCH
▽=0	4 PLACES	± ---	± ---
▽=0	3 PLACES	± ---	± ---
▽=0	2 PLACES	± 0.15	± ---
▽=0	1 PLACE	± 0.25	± ---
▽=0	0 PLACE	± ---	± ---
	ANGULAR ± 1 °		
	DRAFT WHERE APPLICABLE MUST REMAIN WITHIN DIMENSIONS		

DIMENSION STYLE	SCALE	DESIGN UNITS	
MM ONLY	2.5:1	METRIC	◎ THIRD ANGLE PROJECTION

DRAWN BY	DSUN15	DATE 2015/05/05
CHECKED BY	RCHEN08	DATE 2015/05/05
APPROVED BY	RCHEN08	DATE 2015/05/27
MATERIAL NO.	747690231	

TITLE: QSFP+ 1X4 GANGED CAGE ASSEMBLIES WITH ELASTOMER GASKET

molex

DOCUMENT NO.: RSD-74769-0231 | SHEET NO.: 2 OF 5

SIZE: D

THIS DRAWING CONTAINS INFORMATION THAT IS PROPRIETARY TO MOLEX INCORPORATED AND SHOULD NOT BE USED WITHOUT WRITTEN PERMISSION

PCB LAYOUT FOR SINGLE SIDED MOUNTING

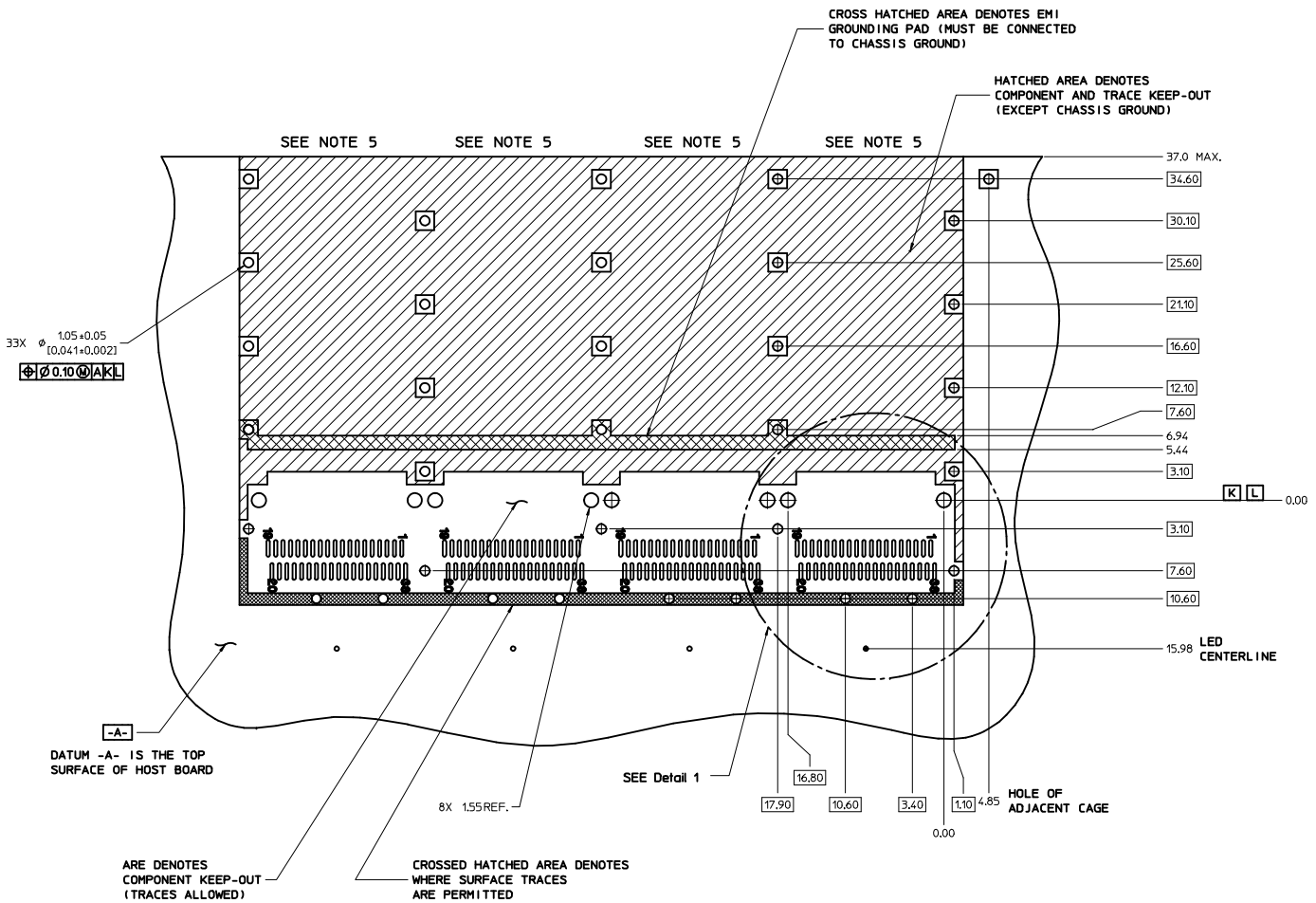

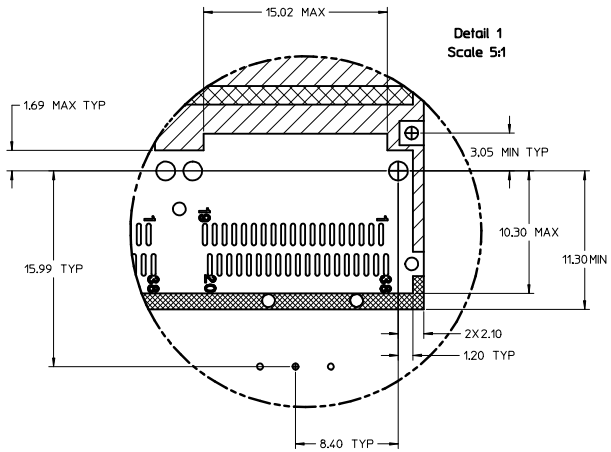

NOTES:
1. PADS AND VIAS CONNECT TO CHASSIS GROUND (RECOMMEND PADS TO BE 2.00mm SQUARE)
2. RECOMMENDED THRU HOLE PLATING INCLUES HASL, OSP, OR IMMERSION (GOLD, SILVER, OR TIN).
3. CONNECTOR PAD LAYOUT PER QSFP MSA WILL ACCOMODATE MOLEX CONNECTOR 75586-0010 OR 75586-0011.
4. SINGLE SIDED BOARD THICKNESS:
   NONIMAL: 1.60
   MININUM: 1.44
5. SPACING BETWEEN PORTS IS 19.00
6. LED SHOULD BE PLACED RELATIVE TO THE QSFP CONNECTOR POST HOLES

SEE REV HISTORY
EC NO: CPG2016-1437 2015/10/07
DRWN:DSUN15 2015/10/07
CHKD:RCHEN08 2015/10/22
APPR:RCHEN08 DESCRIPTION
B REV

QUALITY SYMBOLS
▽=0
▽=0
▽=0

GENERAL TOLERANCES (UNLESS SPECIFIED)

	mm	INCH
4 PLACES	± ---	± ---
3 PLACES	± ---	± ---
2 PLACES	± 0.15	± ---
1 PLACE	± 0.25	± ---
0 PLACE	± ---	± ---

ANGULAR ± 1 °
DRAFT WHERE APPLICABLE MUST REMAIN WITHIN DIMENSIONS

DIMENSION STYLE: MM ONLY
SCALE: 4:1
DESIGN UNITS: METRIC
THIRD ANGLE PROJECTION

		DATE
DRAWN BY	DSUN15	2015/05/05
CHECKED BY	RCHEN08	2015/05/05
APPROVED BY	RCHEN08	2015/05/27

TITLE: QSFP+ 1X4 GANGED CAGE ASSEMBLIES WITH ELASTOMER GASKET
molex
MATERIAL NO. 747690231
DOCUMENT NO. RSD-74769-0231
SHEET NO. 3 OF 5
SIZE D

THIS DRAWING CONTAINS INFORMATION THAT IS PROPRIETARY TO MOLEX INCORPORATED AND SHOULD NOT BE USED WITHOUT WRITTEN PERMISSION

LIGHTPIPE CLEARANCE

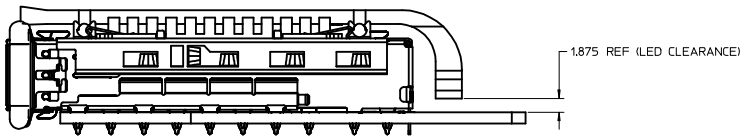

BOARD POSITION

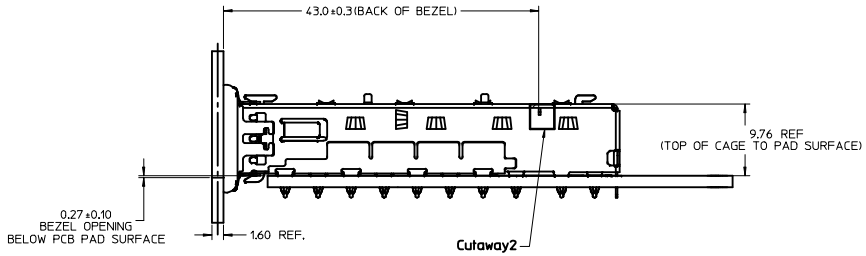

LIGHTPIPE CUTOUT AND BEZEL DIMENSIONS

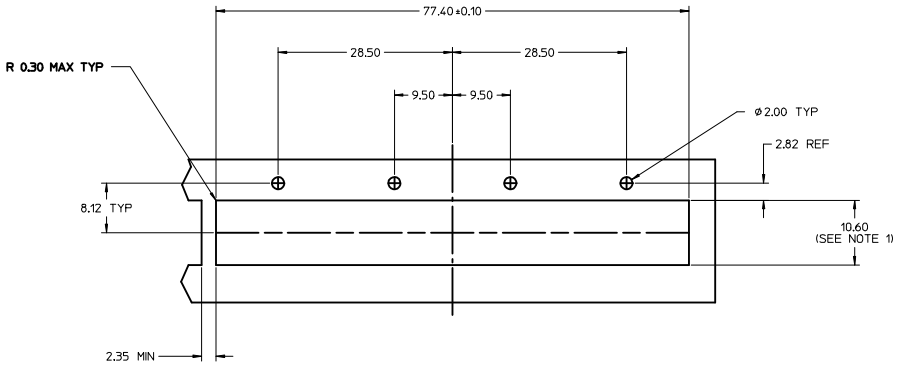

NOTES:
1. PCB THICKNESS VARIATION MUST BE CONSIDERED WHEN DETERMINING BEZEL OPENING, SIZE, AND LOCATION

SEE REV HISTORY			
EC NO: CPG2016-1437	DESCRIPTION	REV	
DRWN:DSUN15 2015/10/07			
CHKD:RCHEN08 2015/10/07			
APPR:RCHEN08 2015/10/22			
	B		

QUALITY SYMBOLS	GENERAL TOLERANCES (UNLESS SPECIFIED)	mm	INCH
▽=0	4 PLACES	± ---	± ---
▽=0	3 PLACES	± ---	± ---
▽=0	2 PLACES	± 0.15	± ---
▽=0	1 PLACE	± 0.25	± ---
	0 PLACE	± ---	± ---
	ANGULAR ± 1 °		
	DRAFT WHERE APPLICABLE MUST REMAIN WITHIN DIMENSIONS		

DIMENSION STYLE	MM ONLY
SCALE	2.5:1
DESIGN UNITS	METRIC
	THIRD ANGLE PROJECTION
DRAWN BY / DATE	DSUN15 2015/05/05
CHECKED BY / DATE	RCHEN08 2015/05/05
APPROVED BY / DATE	RCHEN08 2015/05/27
MATERIAL NO.	747690231
TITLE	QSFP+ 1X4 GANGED CAGE ASSEMBLIES WITH ELASTOMER GASKET
DOCUMENT NO.	RSD-74769-0231
SHEET NO.	4 OF 5
SIZE	D

THIS DRAWING CONTAINS INFORMATION THAT IS PROPRIETARY TO MOLEX INCORPORATED AND SHOULD NOT BE USED WITHOUT WRITTEN PERMISSION

DATE	REV	DESCRIPTION
2015/05/05	A	INITIAL RELEASE
2015/10/07	B	SHEET 1 M11: CHANGED 'LIGHTPIPE/HEATSINK/CLIP/LIGHT SHIELD NOT SHOWN FOR CLARITY' TO 'LIGHTPIPE/HEATSINK/CLIP NOT SHOWN FOR CLARITY' SHEET 2: REMOVED LIGHT SHIELD AND UPDATED VIEWS SHEET 3: REMOVED LIGHT SHIELD AND UPDATED VIEWS I20: REMOVED [0.041 +/- 0.002]

SEE REV HISTORY
EC NO: CPG2016-1437

REV	DESCRIPTION	DRWN	CHKD	APPR	
B		DSUN15	RCHEN08	RCHEN08	2015/10/22
A		DSUN15	RCHEN08	RCHEN08	2015/10/07

QUALITY SYMBOLS
▽=0
▽=0
▽=0

GENERAL TOLERANCES (UNLESS SPECIFIED)

	mm	INCH
4 PLACES	± ---	± ---
3 PLACES	± ---	± ---
2 PLACES	± 0.15	± ---
1 PLACE	± 0.25	± ---
0 PLACE	± ---	± ---

ANGULAR ± 1 °

DRAFT WHERE APPLICABLE MUST REMAIN WITHIN DIMENSIONS

DIMENSION STYLE: MM ONLY
SCALE: 3:1
DESIGN UNITS: METRIC
THIRD ANGLE PROJECTION

DRAWN BY: DSUN15 DATE: 2015/05/05
CHECKED BY: RCHEN08 DATE: 2015/05/05
APPROVED BY: RCHEN08 DATE: 2015/05/27

TITLE: QSFP+ 1X4 GANGED CAGE ASSEMBLIES WITH ELASTOMER GASKET

molex

MATERIAL NO.: 747690231
DOCUMENT NO.: RSD-74769-0231
SHEET NO.: 5 OF 5
SIZE: D

THIS DRAWING CONTAINS INFORMATION THAT IS PROPRIETARY TO MOLEX INCORPORATED AND SHOULD NOT BE USED WITHOUT WRITTEN PERMISSION

BASE CAGE DETAILS

(APPLIES TO ALL CAGES IN THIS DRAWING)

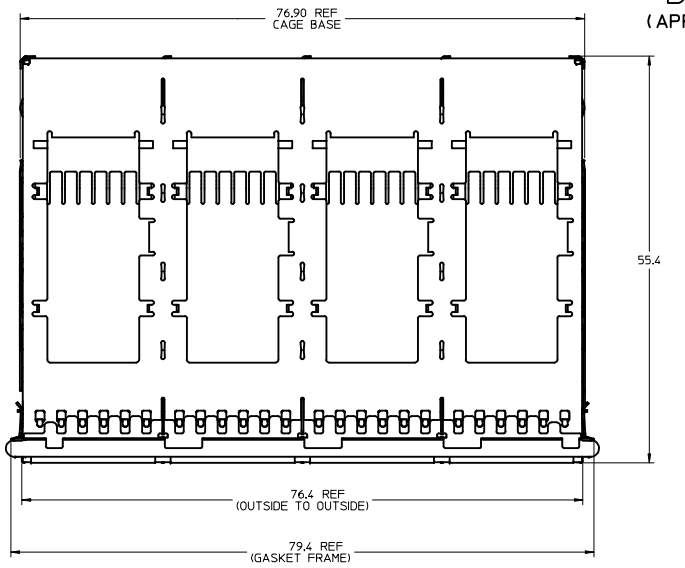

747690212

SHOWN

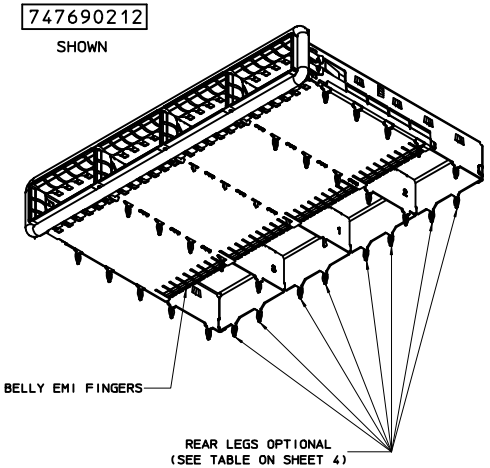

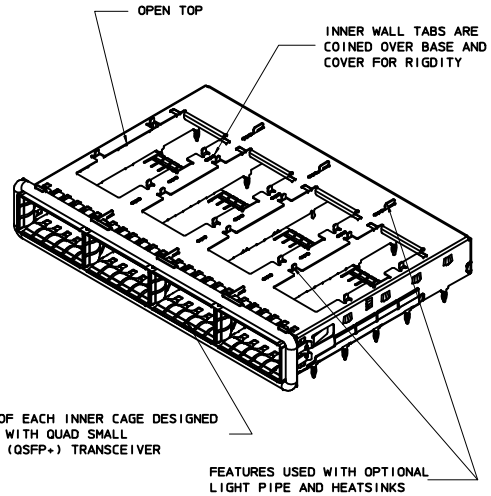

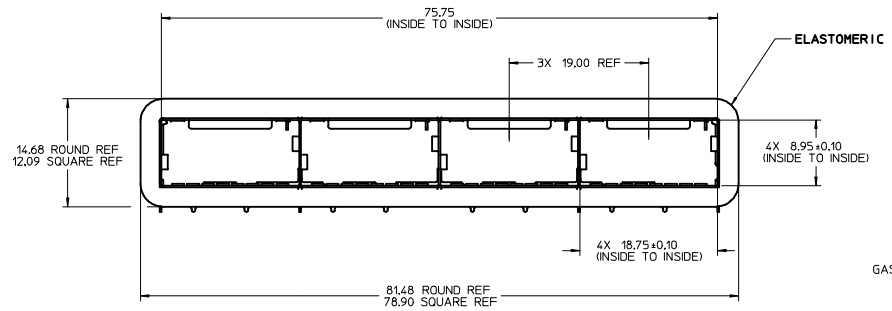

NOTE:
INNER SPRING FINGERS HAVE BEEN REMOVED FOR CLARITY

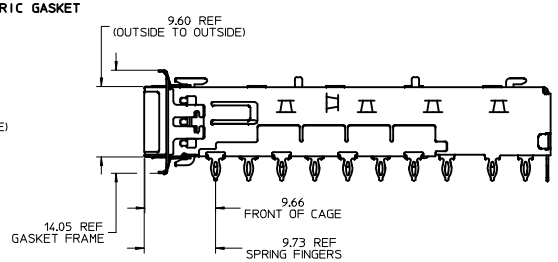

NOTE:
ELASTOMER GASKET REMOVED FOR CLARITY.

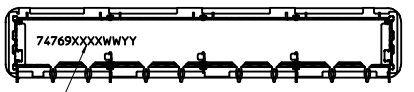

PART NO. AND WEEK/YEAR DATE CODE TO BE PRINTED ON
BACK OF COMPLETED CAGE ASSEMBLY APPROXIMATELY AS SHOWN.
SEE TABLE BELOW FOR DATE CODE INFORMATION.

WEEK/YEAR DATE CODE TABLE	
WW	01 THRU 52 OR 53 EXAMPLE: 01 = FIRST WEEK OF YEAR 52 = LAST WEEK OF YEAR
YY	12, 13, 14 ETC. EXAMPLE: YEAR 2014 = 14

NOTES:
1. QSFP+ ASSEMBLES ALSO AVAILABLE AND 1X1 (74750 SERIES), 1X2 (74767 SERIES), 1X3 (74768 SERIES), AND 1X6 (74771 SERIES) CONFIGURATIONS.
2. MATERIAL:
   LIGHT PIPE/HEATSINK CLIP: STAINLESS STEEL
   LIGHT PIPES: POLYCARBONATE (94-V0 RATED)
   HEAT SINKS: ANNODIZED ALUMINUM
   CAGE: NICKEL COPPER ALLOY
3. NO RoHS EXEMPTIONS
4. CUSTOM HEATSINKS AVAILABLE UPON REQUEST

SEE REV HISTORY
EC NO: CPG2015-0311 2015/03/04
DRWN: JWALLACE01 2015/07/01
CHKD: JERWIN 2015/07/01
APPR: KLLOYD 2015/07/01
DESCRIPTION
REV: M

QUALITY SYMBOLS
▽=0
▽=0
▽=0

GENERAL TOLERANCES (UNLESS SPECIFIED)

	mm	INCH
4 PLACES	± ---	± ---
3 PLACES	± ---	± ---
2 PLACES	± 0.15	± ---
1 PLACE	± 0.25	± ---
0 PLACE	± ---	± ---

ANGULAR ± 1 °

DRAFT WHERE APPLICABLE MUST REMAIN WITHIN DIMENSIONS

DIMENSION STYLE: MM ONLY
SCALE: 2:1
DESIGN UNITS: METRIC
THIRD ANGLE PROJECTION

		DATE
DRAWN BY	JERWIN	2011/05/03
CHECKED BY	CHIRSCHY	2011/05/03
APPROVED BY	RMAHMOOD	2011/06/10
MATERIAL NO.	SHT 5, 6, & 7	

TITLE: QSFP+ 1X4 GANGED CAGE ASSEMBLIES WITH ELASTOMER GASKET

molex

DOCUMENT NO.: SD-74769-0501
SHEET NO.: 1 OF 14
SIZE: D

THIS DRAWING CONTAINS INFORMATION THAT IS PROPRIETARY TO MOLEX INCORPORATED AND SHOULD NOT BE USED WITHOUT WRITTEN PERMISSION

CAGE ASSEMBLY OPTIONS

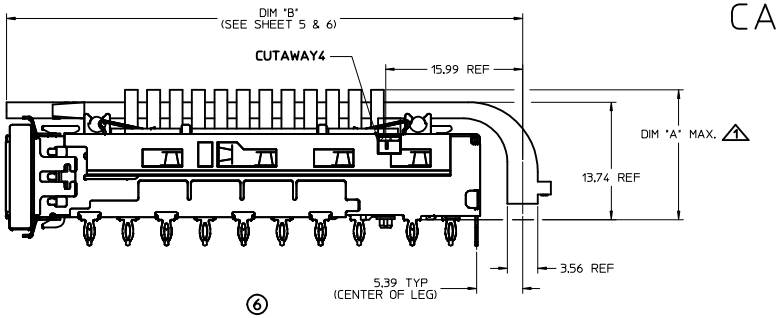

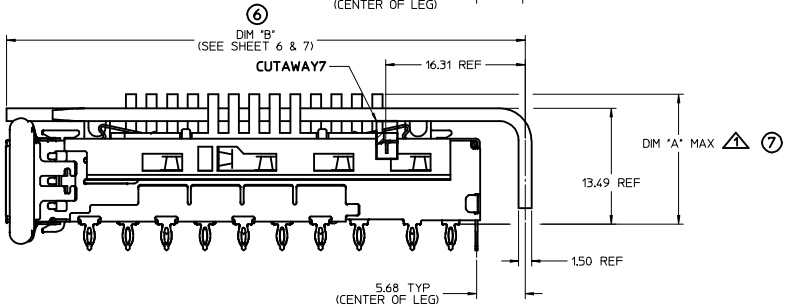

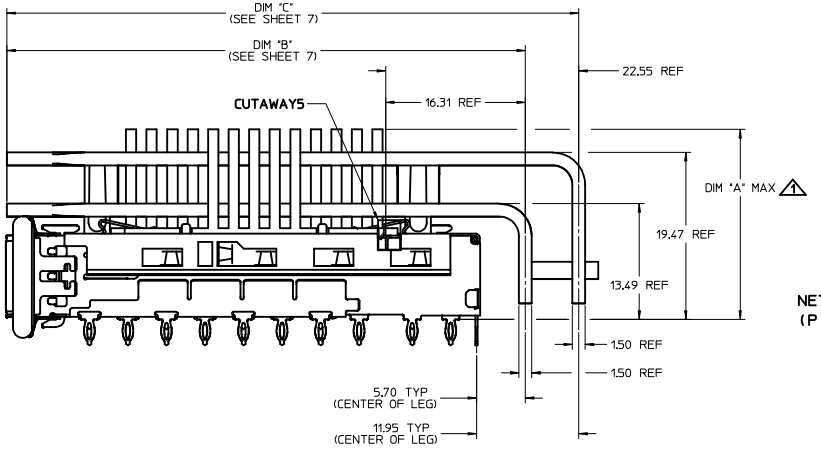

	SINGLE LIGHT PIPE	DUAL LIGHT PIPE	QUAD LIGHT PIPE
PCI HEATSINK (PIN STYLE)	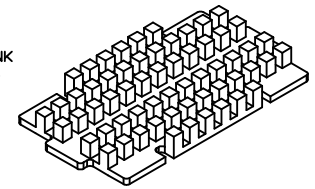	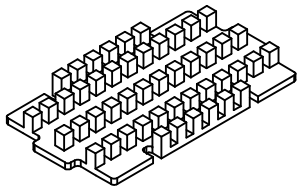	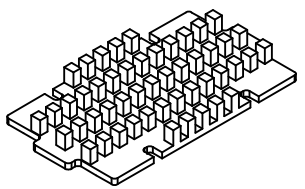
SAN HEATSINK (PIN STYLE)	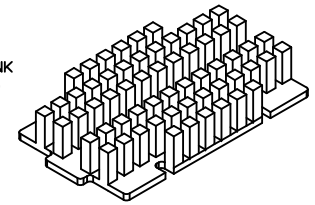	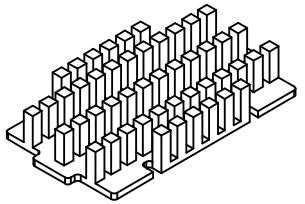	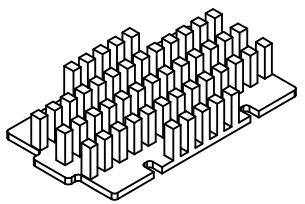
NET HEATSINK (PIN STYLE)	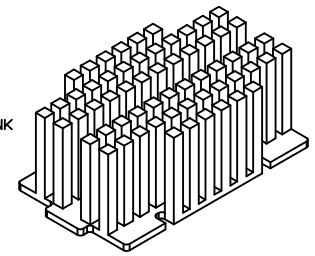	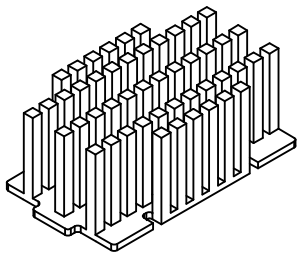	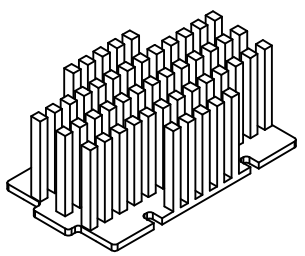

HEATSINK HEIGHT OPTIONS

OVERALL HEATSINK HEIGHT	DIM 'A'
PCI	13.7
SAN	16.0
NET	23.0

NOTE:
1) FOR LIGHT PIPE OPTIONS SEE SHEET 3.

1 HEIGHT OF HEATSINK WITH MODULE INSERTED. DIMENSION MAY BE LESS DUE TO MODULE AND HEATSINK VARIATIONS.

SEE REV HISTORY
EC NO: CPG2015-0311 2015/03/04
DRWN: JWALLACE01 2015/07/01
CHKD: JERWIN 2015/07/01
APPR: KLLOYD 2015/07/01
DESCRIPTION
REV
M

QUALITY SYMBOLS
=0
=0
=0

GENERAL TOLERANCES (UNLESS SPECIFIED)

	mm	INCH
4 PLACES	± ---	± ---
3 PLACES	± ---	± ---
2 PLACES	± 0.15	± ---
1 PLACE	± 0.25	± ---
0 PLACE	± ---	± ---
ANGULAR ± 1 °		

DRAFT WHERE APPLICABLE MUST REMAIN WITHIN DIMENSIONS

DIMENSION STYLE: MM ONLY
SCALE: 3.5:1
DESIGN UNITS: METRIC
THIRD ANGLE PROJECTION

DRAWN BY	JERWIN
DATE	2011/05/03
CHECKED BY	CHIRSCHY
DATE	2011/05/03
APPROVED BY	RMAHMOOD
DATE	2011/06/10
MATERIAL NO.	SHT 5, 6, & 7
SIZE	D

TITLE: QSFP+ 1X4 GANGED CAGE ASSEMBLIES WITH ELASTOMER GASKET

molex

DOCUMENT NO. SD-74769-0501
SHEET NO. 2 OF 14

THIS DRAWING CONTAINS INFORMATION THAT IS PROPRIETARY TO MOLEX INCORPORATED AND SHOULD NOT BE USED WITHOUT WRITTEN PERMISSION

CAGE ASSEMBLY OPTIONS (CONT.)

SINGLE LIGHT PIPE

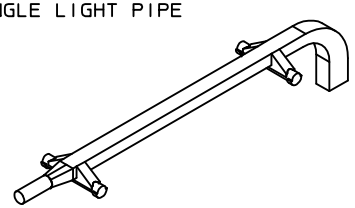

DUAL LIGHT PIPE

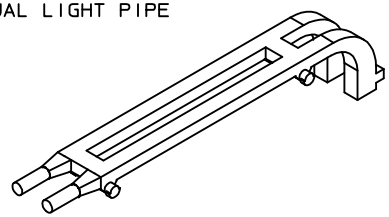

QUAD LIGHT PIPE
(ROUND)

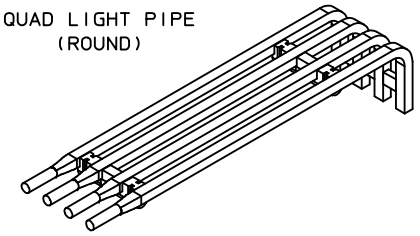

QUAD LIGHT PIPE
(RECTANGULAR)

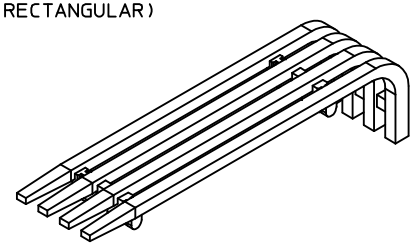

QUAD LIGHT PIPE
(SQUARE)

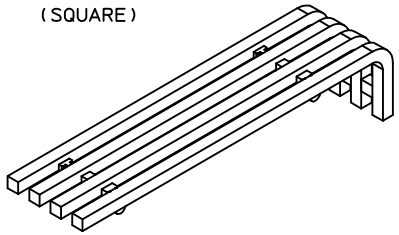

QUAD LIGHT PIPE
(FLARED)

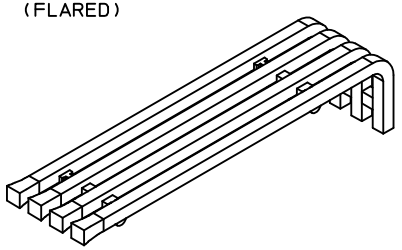

2 ROW QUAD LIGHT PIPE

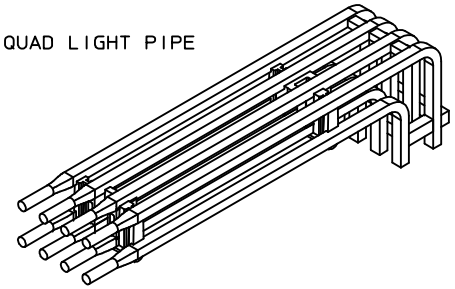

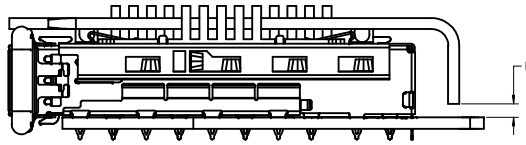

NOTE:
1) FOR HEATSINK OPTIONS SEE SHEET 2.

LIGHT PIPE	LED CLEARANCE (REF)
SINGLE	1.875
DUAL	1.875
QUAD (ROUND TIP)	1.875
QUAD (RECTANGLE TIP)	0.931
QUAD (SQUARE TIP)	1.875
QUAD (FLARED TIP)	1.725
QUAD (2 ROW)	1.875

SEE REV HISTORY
EC NO: CPG2015-0311 2015/03/04
DRWN: JWALLACE01 2015/07/01
CHKD: JERWIN 2015/07/01
APPR: KLLOYD 2015/07/01
DESCRIPTION
REV
M

QUALITY SYMBOLS
=0
=0
=0

GENERAL TOLERANCES (UNLESS SPECIFIED)

	mm	INCH
4 PLACES	± ---	± ---
3 PLACES	± ---	± ---
2 PLACES	± 0.15	± ---
1 PLACE	± 0.25	± ---
0 PLACE	± ---	± ---

ANGULAR ± 1 °

DRAFT WHERE APPLICABLE MUST REMAIN WITHIN DIMENSIONS

DIMENSION STYLE: MM ONLY
SCALE: 3:1
DESIGN UNITS: METRIC
THIRD ANGLE PROJECTION

DRAWN BY: JERWIN DATE: 2011/05/03
CHECKED BY: CHIRSCHY DATE: 2011/05/03
APPROVED BY: RMAHMOOD DATE: 2011/06/10
MATERIAL NO.: SHT 5, 6, & 7

TITLE: QSFP+ 1X4 GANGED CAGE ASSEMBLIES WITH ELASTOMER GASKET

molex

DOCUMENT NO.: SD-74769-0501
SHEET NO.: 3 OF 14
SIZE: D

THIS DRAWING CONTAINS INFORMATION THAT IS PROPRIETARY TO MOLEX INCORPORATED AND SHOULD NOT BE USED WITHOUT WRITTEN PERMISSION

CAGE ASSEMBLY OPTIONS (CONT.)

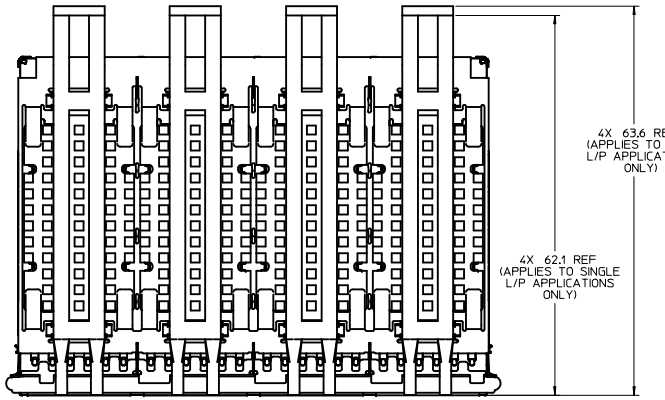

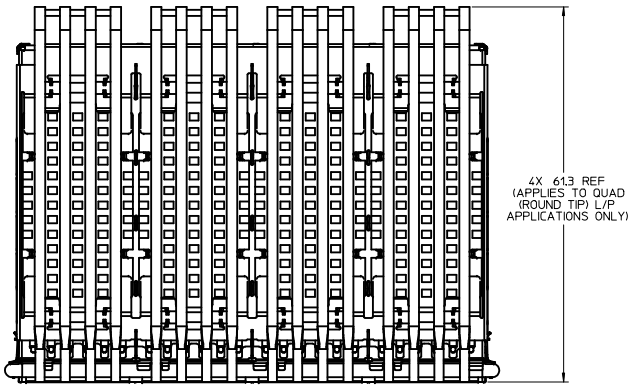

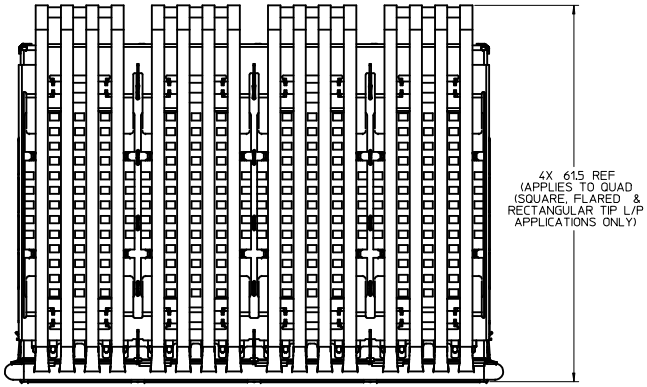

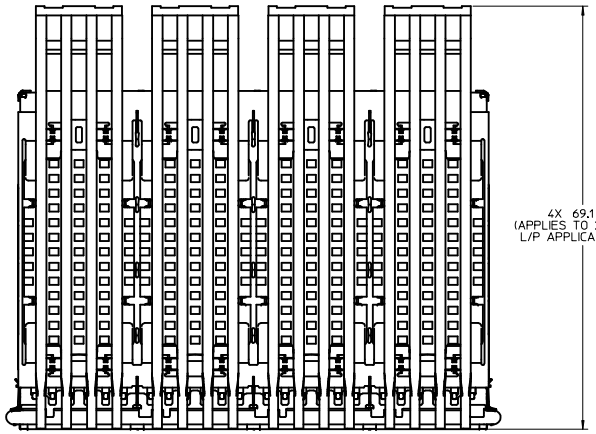

REAR LEG OPTIONS

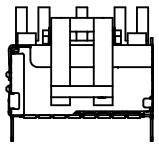

0 REAR LEGS

Partial2
SCALE 3:1

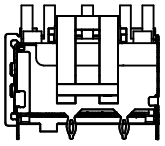

2 REAR LEGS

Partial1
SCALE 3:1

ELASTOMERIC GASKET OPTIONS

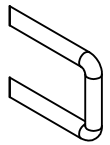

2.6 X 41.0 [0.103 X 1.62 INCH]
ROUND GASKET

Partial3
SCALE 3:1

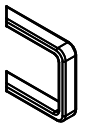

1.25 X 2.49 [0.049 X 0.098 INCH]
LOW PROFILE RECTANGULAR GASKET

Partial4
SCALE 3:1

SEE REV HISTORY
EC NO: CPG2015-0311 2015/03/04
DRWN: JWALLACE01 2015/07/01
CHKD: JERWIN 2015/07/01
APPR: KLLOYD 2015/07/01
DESCRIPTION
REV
M

QUALITY SYMBOLS
▽=0
▽=0
▽=0

GENERAL TOLERANCES (UNLESS SPECIFIED)

	mm	INCH
4 PLACES	± ---	± ---
3 PLACES	± ---	± ---
2 PLACES	± 0.15	± ---
1 PLACE	± 0.25	± ---
0 PLACE	± ---	± ---

ANGULAR ± 1 °

DRAFT WHERE APPLICABLE MUST REMAIN WITHIN DIMENSIONS

DIMENSION STYLE: MM ONLY
SCALE: 3:1
DESIGN UNITS: METRIC
THIRD ANGLE PROJECTION

		DATE
DRAWN BY	JERWIN	2011/05/03
CHECKED BY	CHIRSCHY	2011/05/03
APPROVED BY	RMAHMOOD	2011/06/10
MATERIAL NO.	SHT 5, 6, & 7	

TITLE: QSFP+ 1X4 GANGED CAGE ASSEMBLIES WITH ELASTOMER GASKET

molex

DOCUMENT NO.: SD-74769-0501
SHEET NO.: 4 OF 14
SIZE: D

THIS DRAWING CONTAINS INFORMATION THAT IS PROPRIETARY TO MOLEX INCORPORATED AND SHOULD NOT BE USED WITHOUT WRITTEN PERMISSION

PART NUMBER SELECTION

NO HEATSINKS
NO LIGHT PIPES

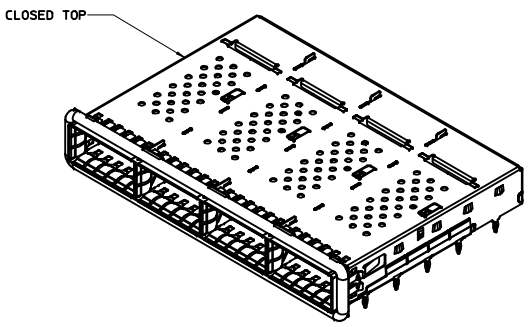

MOLEX P/N	# OF REAR LEGS PER PORT
747690223	2
747690226	0

NO HEATSINKS
WITH SINGLE LIGHT PIPES

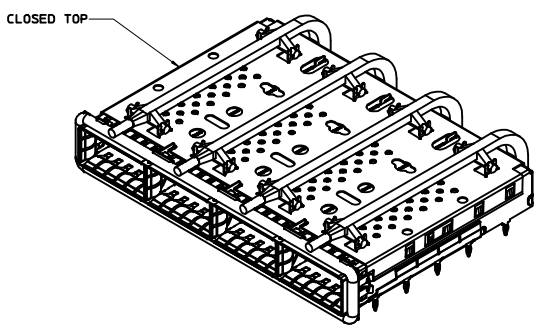

MOLEX P/N	GASKET STYLE	# OF REAR LEGS PER PORT
747690229	ROUND	2
747690230	ROUND	0

NO HEATSINKS
NO LIGHT PIPES

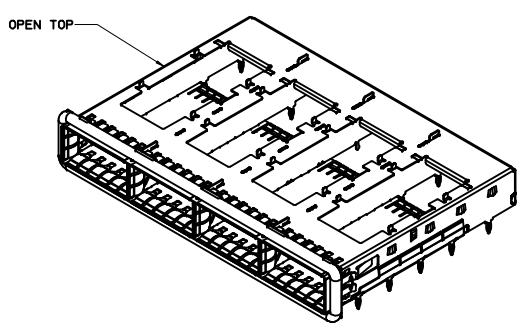

MOLEX P/N	GASKET STYLE	# OF REAR LEGS PER PORT
747690204	SQUARE	0
747690205	SQUARE	2
747690206	ROUND	0
747690207	ROUND	2
747690208	SQUARE	2
747690209	SQUARE	0
747690210	ROUND	0
747690212	ROUND	2
747690217	SQUARE	2

WITH HEATSINKS
NO LIGHT PIPES

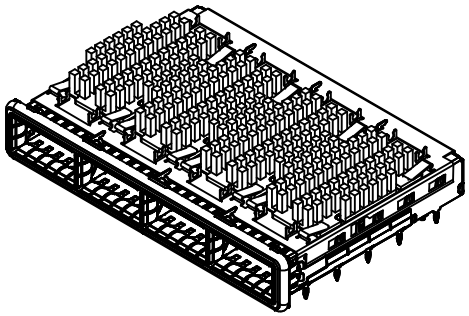

MOLEX P/N	GASKET STYLE	HS	# OF REAR LEGS PER PORT
747690505	ROUND	PCI	2
747690506	ROUND	SAN	2
747690507	ROUND	NET	2
747690508*	ROUND	PCI	2
747690509*	ROUND	NET	2
747690514	ROUND	PCI	2
747690516	SQUARE	PCI	2
747690605	ROUND	PCI	0
747690606	ROUND	SAN	0
747690607	ROUND	NET	0

* EMI GASKET SEAM PLACED ON LEFT SIDE VIEWING INTO PORT

SEE REV HISTORY
EC NO: CPG2015-0311 2015/03/04
DRWN: JWALLACE01 2015/07/01
CHKD: JERWIN 2015/07/01
APPR: KLLOYD 2015/07/01
DESCRIPTION
REV
M

QUALITY SYMBOLS
▽=0
▽=0
▽=0

GENERAL TOLERANCES (UNLESS SPECIFIED)

	mm	INCH
4 PLACES	± ---	± ---
3 PLACES	± ---	± ---
2 PLACES	± 0.15	± ---
1 PLACE	± 0.25	± ---
0 PLACE	± ---	± ---

ANGULAR ± 1 °
DRAFT WHERE APPLICABLE MUST REMAIN WITHIN DIMENSIONS

DIMENSION STYLE: MM ONLY
SCALE: 2:1
DESIGN UNITS: METRIC
THIRD ANGLE PROJECTION

DRAWN BY: JERWIN DATE: 2011/05/03
CHECKED BY: CHIRSCHY DATE: 2011/05/03
APPROVED BY: RMAHMOOD DATE: 2011/06/10
MATERIAL NO.: SEE TABLE

TITLE: QSFP+ 1X4 GANGED CAGE ASSEMBLIES WITH ELASTOMER GASKET

molex

DOCUMENT NO.: SD-74769-0501
SHEET NO.: 5 OF 14
SIZE: D

THIS DRAWING CONTAINS INFORMATION THAT IS PROPRIETARY TO MOLEX INCORPORATED AND SHOULD NOT BE USED WITHOUT WRITTEN PERMISSION

PART NUMBER SELECTION (CONT.)

SINGLE LIGHT PIPE
WITH HEAT SINKS

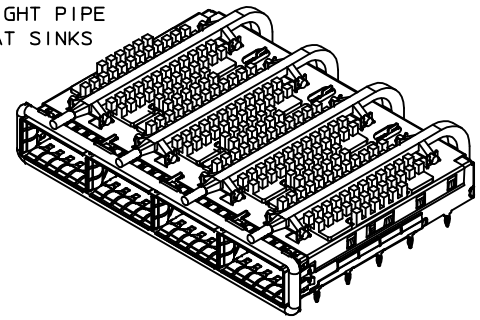

MOLEX P/N	LP	TIP STYLE	HS	# OF REAR LEGS PER PORT	DIM 'B'
747690501	SINGLE	ROUND	SAN	2	60.25
747690502	SINGLE	ROUND	NET	2	60.25
747690513	SINGLE	ROUND	PCI	2	60.25
747690601	SINGLE	ROUND	SAN	0	60.25
747690602	SINGLE	ROUND	NET	0	60.25
747690612	SINGLE	ROUND	PCI	0	60.25

DUAL LIGHT PIPE
WITH HEAT SINKS

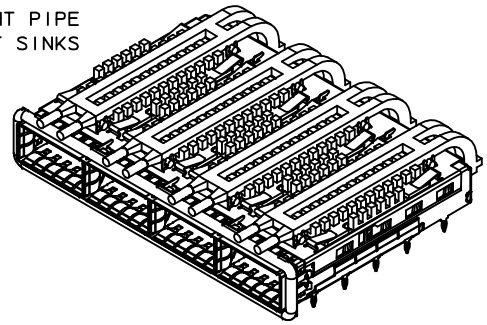

MOLEX P/N	LP	TIP STYLE	GASKET STYLE	HS	# OF REAR LEGS PER PORT	DIM 'B'
747690503	DUAL	ROUND	ROUND	SAN	2	60.25
747690504	DUAL	ROUND	ROUND	NET	2	60.25
747690511	DUAL	ROUND	ROUND	PCI	2	60.25
747690512	DUAL	ROUND	ROUND	NET	2	60.25
747690551	DUAL	ROUND	SQUARE	PCI	2	58.63
747690603	DUAL	ROUND	ROUND	SAN	0	60.25
747690604	DUAL	ROUND	ROUND	NET	0	60.25
747690611	DUAL	ROUND	ROUND	PCI	0	60.25

QUAD LIGHT PIPE
WITH HEAT SINKS

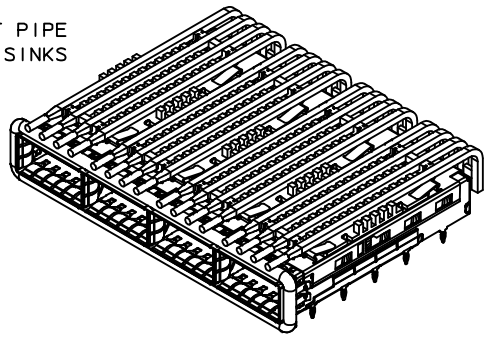

MOLEX P/N	LP	TIP STYLE	GASKET STYLE	HS	# OF REAR LEGS PER PORT	DIM 'B'
747690517	QUAD	ROUND	ROUND	PCI	2	60.54
747690518	QUAD	ROUND	ROUND	SAN	2	60.54
747690519	QUAD	ROUND	ROUND	NET	2	60.54
747690520	QUAD	ROUND	ROUND	PCI	0	60.54
747690521	QUAD	ROUND	ROUND	SAN	0	60.54
747690522	QUAD	ROUND	ROUND	NET	0	60.54
747690537	QUAD	ROUND	SQUARE	PCI	2	60.54
747690538	QUAD	ROUND	SQUARE	SAN	2	60.54
747690539	QUAD	ROUND	SQUARE	NET	2	60.54
747690540	QUAD	ROUND	SQUARE	PCI	0	60.54
747690541	QUAD	ROUND	SQUARE	SAN	0	60.54
747690542	QUAD	ROUND	SQUARE	NET	0	60.54

SEE REV HISTORY
EC NO: CPG2015-0311 2015/03/04
DRWN: JWALLACE01 2015/07/01
CHKD: JERWIN 2015/07/01
APPR: KLLOYD 2015/07/01
DESCRIPTION
REV
M

QUALITY SYMBOLS
=0
=0
=0

GENERAL TOLERANCES (UNLESS SPECIFIED)

	mm	INCH
4 PLACES	± ---	± ---
3 PLACES	± ---	± ---
2 PLACES	± 0.15	± ---
1 PLACE	± 0.25	± ---
0 PLACE	± ---	± ---

ANGULAR ± 1 °
DRAFT WHERE APPLICABLE MUST REMAIN WITHIN DIMENSIONS

DIMENSION STYLE: MM ONLY
SCALE: 2:1
DESIGN UNITS: METRIC
THIRD ANGLE PROJECTION

DRAWN BY: JERWIN DATE: 2011/05/03
CHECKED BY: CHIRSCHY DATE: 2011/05/03
APPROVED BY: RMAHMOOD DATE: 2011/06/10
MATERIAL NO.: SEE TABLE

TITLE: QSFP+ 1X4 GANGED CAGE ASSEMBLIES WITH ELASTOMER GASKET

molex

DOCUMENT NO.: SD-74769-0501
SHEET NO.: 6 OF 14
SIZE: D

THIS DRAWING CONTAINS INFORMATION THAT IS PROPRIETARY TO MOLEX INCORPORATED AND SHOULD NOT BE USED WITHOUT WRITTEN PERMISSION

PART NUMBER SELECTION (CONT.)

QUAD LIGHT PIPE
WITH HEAT SINKS

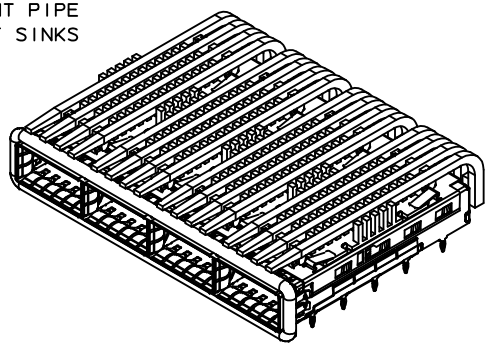

MOLEX P/N	LP	TIP STYLE	HS	# OF REAR LEGS PER PORT	DIM 'B'
747690561	QUAD	RECTANGULAR	SAN	0	59.96

QUAD LIGHT PIPE
WITH HEAT SINKS

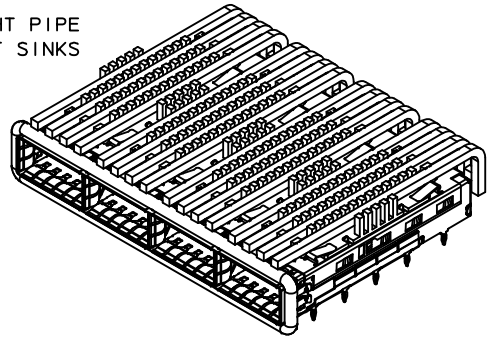

MOLEX P/N	LP	TIP STYLE	HS	# OF REAR LEGS PER PORT	DIM 'B'
747690531	QUAD	SQUARE	PCI	2	60.54
747690532	QUAD	SQUARE	SAN	2	60.54
747690533	QUAD	SQUARE	NET	2	60.54
747690534	QUAD	SQUARE	PCI	0	60.54
747690535	QUAD	SQUARE	SAN	0	60.54
747690536	QUAD	SQUARE	NET	0	60.54

QUAD LIGHT PIPE
WITH HEAT SINKS

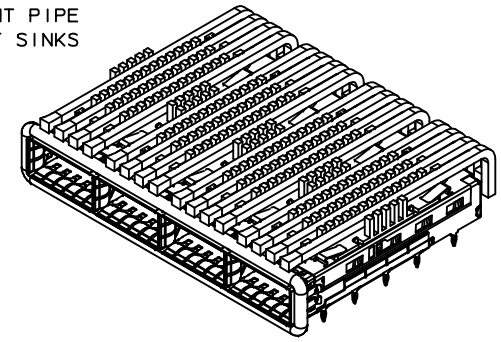

MOLEX P/N	LP	TIP STYLE	GASKET STYLE	HS	# OF REAR LEGS PER PORT	DIM 'B'
747690523	QUAD	FLARED	ROUND	PCI	2	60.54
747690524	QUAD	FLARED	ROUND	SAN	2	60.54
747690525	QUAD	FLARED	ROUND	NET	2	60.54
747690526	QUAD	FLARED	ROUND	PCI	0	60.54
747690527	QUAD	FLARED	ROUND	SAN	0	60.54
747690528	QUAD	FLARED	ROUND	NET	0	60.54
747690543	QUAD	FLARED	SQUARE	PCI	2	60.54
747690544	QUAD	FLARED	SQUARE	SAN	2	60.54
747690545	QUAD	FLARED	SQUARE	NET	2	60.54
747690546	QUAD	FLARED	SQUARE	PCI	0	60.54
747690547	QUAD	FLARED	SQUARE	SAN	0	60.54
747690548	QUAD	FLARED	SQUARE	NET	0	60.54

2 ROW QUAD LIGHT PIPE
WITH HEAT SINKS

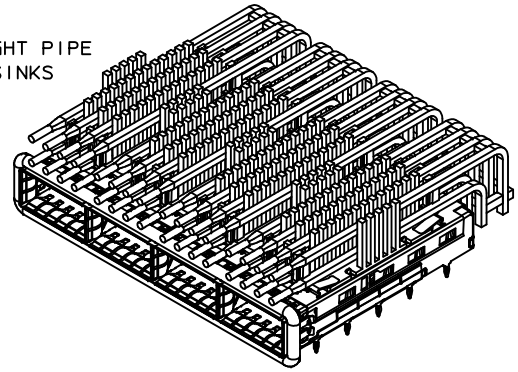

MOLEX P/N	LP	TIP STYLE	GASKET STYLE	HS	# OF REAR LEGS PER PORT	DIM 'B'	DIM 'C'
747690529	2 ROW QUAD	ROUND	ROUND	NET	0	60.54	66.78
747690530	2 ROW QUAD	ROUND	ROUND	NET	2	60.54	66.78
747690549	2 ROW QUAD	ROUND	SQUARE	NET	0	60.54	66.78
747690550	2 ROW QUAD	ROUND	SQUARE	NET	2	60.54	66.78

SEE REV HISTORY
EC NO: CPG2015-0311 2015/03/04
DRWN: JWALLACE01 2015/07/01
CHKD: JERWIN 2015/07/01
APPR: KLLOYD 2015/07/01
DESCRIPTION
REV
M

QUALITY SYMBOLS
=0
=0
=0

GENERAL TOLERANCES (UNLESS SPECIFIED)

	mm	INCH
4 PLACES	± ---	± ---
3 PLACES	± ---	± ---
2 PLACES	± 0.15	± ---
1 PLACE	± 0.25	± ---
0 PLACE	± ---	± ---

ANGULAR ± 1 °
DRAFT WHERE APPLICABLE MUST REMAIN WITHIN DIMENSIONS

DIMENSION STYLE: MM ONLY
SCALE: 2:1
DESIGN UNITS: METRIC
THIRD ANGLE PROJECTION

		DATE
DRAWN BY	JERWIN	2011/05/03
CHECKED BY	CHIRSCHY	2011/05/03
APPROVED BY	RMAHMOOD	2011/06/10
MATERIAL NO.	SEE TABLE	

TITLE: QSFP+ 1X4 GANGED CAGE ASSEMBLIES WITH ELASTOMER GASKET

molex

DOCUMENT NO.: SD-74769-0501
SHEET NO.: 7 OF 14
SIZE: D

THIS DRAWING CONTAINS INFORMATION THAT IS PROPRIETARY TO MOLEX INCORPORATED AND SHOULD NOT BE USED WITHOUT WRITTEN PERMISSION

PCB LAYOUT FOR SINGLE SIDED MOUNTING

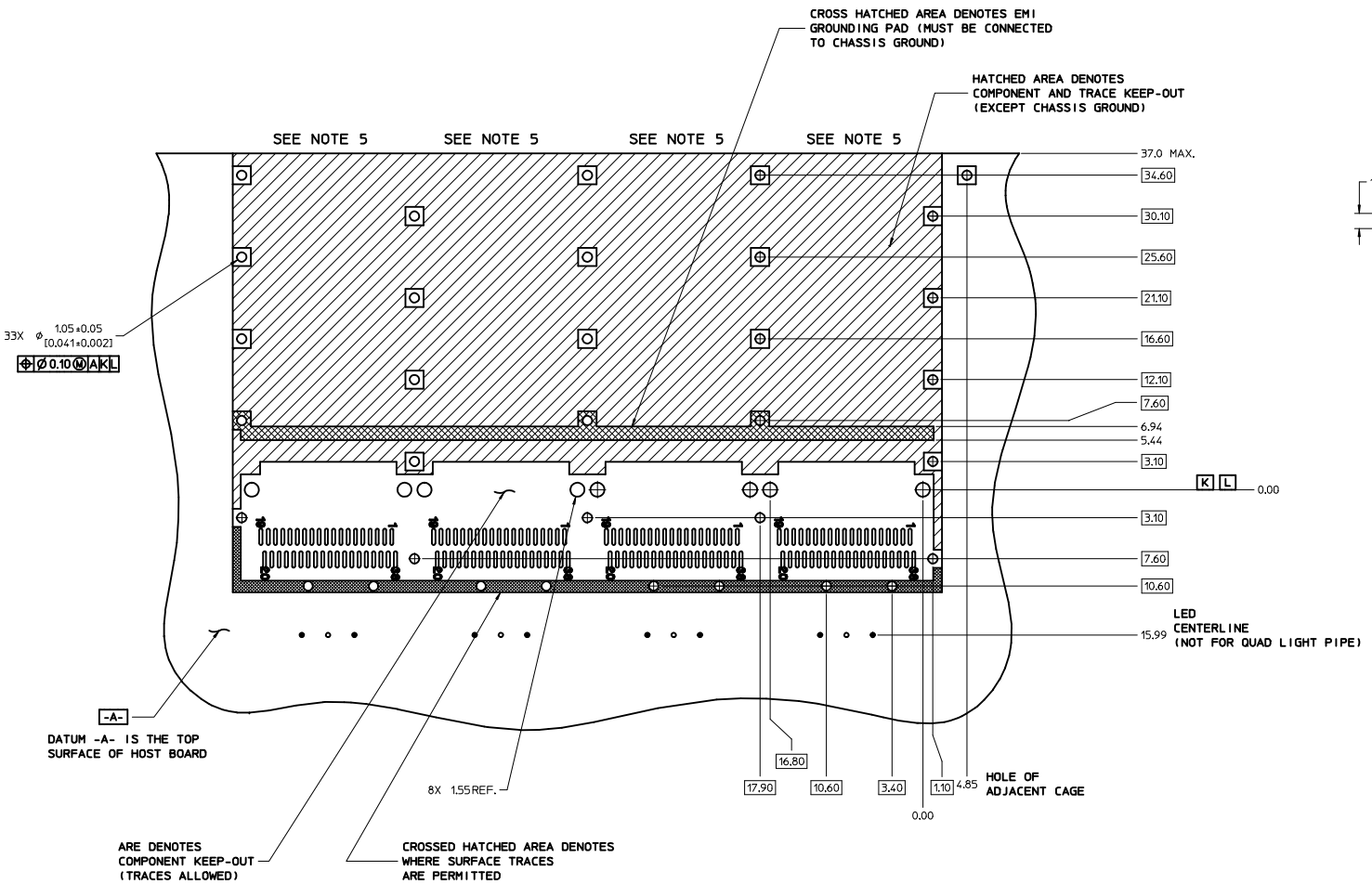

HOST CONNECTOR DETAIL

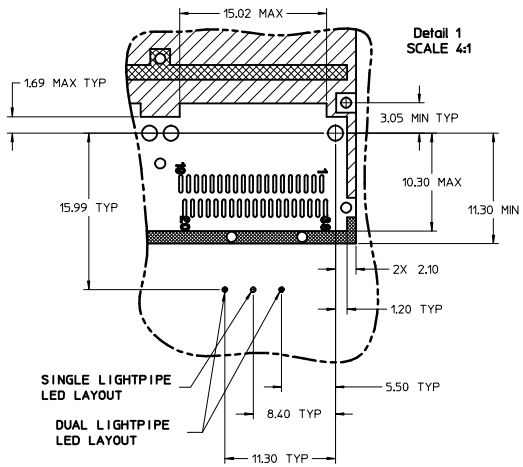

NOTES:
1. PADS AND VIAS CONNECT TO CHASSIS GROUND (RECOMMEND PADS TO BE 2.00mm SQUARE)
2. RECOMMENDED THRU HOLE PLATING INCLUES HASL, OSP, OR IMMERSION (GOLD, SILVER, OR TIN).
3. CONNECTOR PAD LAYOUT PER QSFP MSA WILL ACCOMODATE MOLEX CONNECTOR 75586-0010 OR 75586-0011.
4. SINGLE SIDED BOARD THICKNESS:
   NONIMAL: 1.60 [0.062"]
   MININUM: 1.44 [0.057"]
5. SPACING BETWEEN PORTS IS 19.00 [0.748"].
6. LED SHOULD BE PLACED RELATIVE TO THE QSFP CONNECTOR POST HOLES

SEE REV HISTORY	EC NO:	DESCRIPTION	REV
	CPG2015-0311	2015/03/04	
DRWN: JWALLACE01		2015/07/01	
CHKD: JERWIN		2015/07/01	
APPR: KLLOYD		2015/07/01	
M			

QUALITY SYMBOLS	GENERAL TOLERANCES (UNLESS SPECIFIED)	mm	INCH
=0	4 PLACES	± ---	± ---
=0	3 PLACES	± ---	± ---
=0	2 PLACES	± 0.15	± ---
=0	1 PLACE	± 0.25	± ---
	0 PLACE	± ---	± ---
	ANGULAR ± 1 °		

DRAFT WHERE APPLICABLE MUST REMAIN WITHIN DIMENSIONS

DIMENSION STYLE	MM ONLY
SCALE	4:1
DESIGN UNITS	METRIC
	THIRD ANGLE PROJECTION
DRAWN BY	JERWIN
DATE	2011/05/03
CHECKED BY	CHIRSCHY
DATE	2011/05/03
APPROVED BY	RMAHMOOD
DATE	2011/06/10
MATERIAL NO.	SHT 5, 6, & 7
TITLE	QSFP+ 1X4 GANGED CAGE ASSEMBLIES WITH ELASTOMER GASKET
DOCUMENT NO.	SD-74769-0501
SHEET NO.	8 OF 14
SIZE	D

THIS DRAWING CONTAINS INFORMATION THAT IS PROPRIETARY TO MOLEX INCORPORATED AND SHOULD NOT BE USED WITHOUT WRITTEN PERMISSION

PCB LAYOUT FOR SINGLE SIDED MOUNTING (CON'T)

FOR QUAD & 2 ROW QUAD LIGHT PIPE ONLY

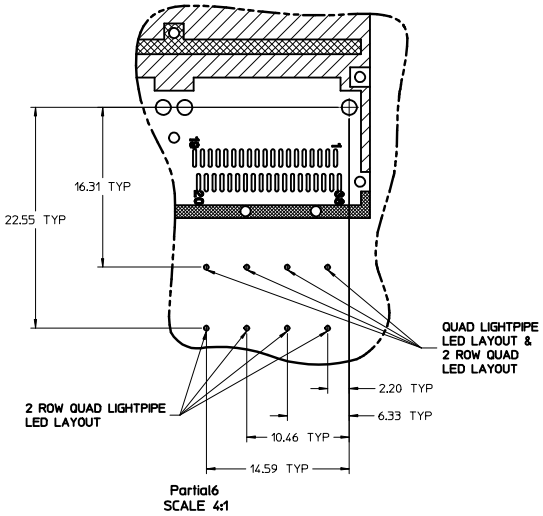

FOR QUAD 747500422 LIGHT PIPE ONLY

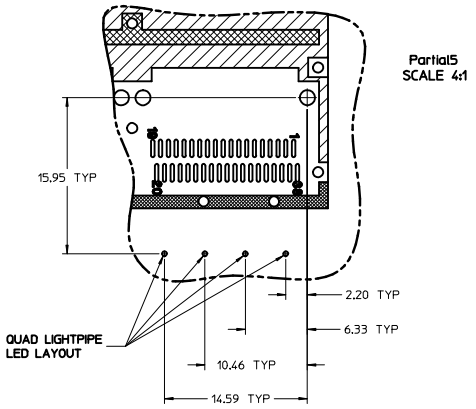

SEE REV HISTORY
EC NO: CPG2015-0311 2015/03/04
DRWN: JWALLACE01 2015/07/01
CHKD: JERWIN 2015/07/01
APPR: KLLOYD 2015/07/01
DESCRIPTION
REV
M

QUALITY SYMBOLS
=0
=0
=0

GENERAL TOLERANCES (UNLESS SPECIFIED)

	mm	INCH
4 PLACES	± ---	± ---
3 PLACES	± ---	± ---
2 PLACES	± 0.15	± ---
1 PLACE	± 0.25	± ---
0 PLACE	± ---	± ---

ANGULAR ± 1 °

DRAFT WHERE APPLICABLE MUST REMAIN WITHIN DIMENSIONS

DIMENSION STYLE: MM ONLY
SCALE: 3:1
DESIGN UNITS: METRIC
THIRD ANGLE PROJECTION

DRAWN BY: JERWIN DATE: 2011/05/03
CHECKED BY: CHIRSCHY DATE: 2011/05/03
APPROVED BY: RMAHMOOD DATE: 2011/06/10
MATERIAL NO.: SHT 5, 6 & 7

TITLE: QSFP+ 1X4 GANGED CAGE ASSEMBLIES WITH ELASTOMER GASKET

molex

DOCUMENT NO.: SD-74769-0501
SHEET NO.: 9 OF 14
SIZE: D

THIS DRAWING CONTAINS INFORMATION THAT IS PROPRIETARY TO MOLEX INCORPORATED AND SHOULD NOT BE USED WITHOUT WRITTEN PERMISSION

PCB LAYOUT FOR BELLY TO BELLY MOUNTING

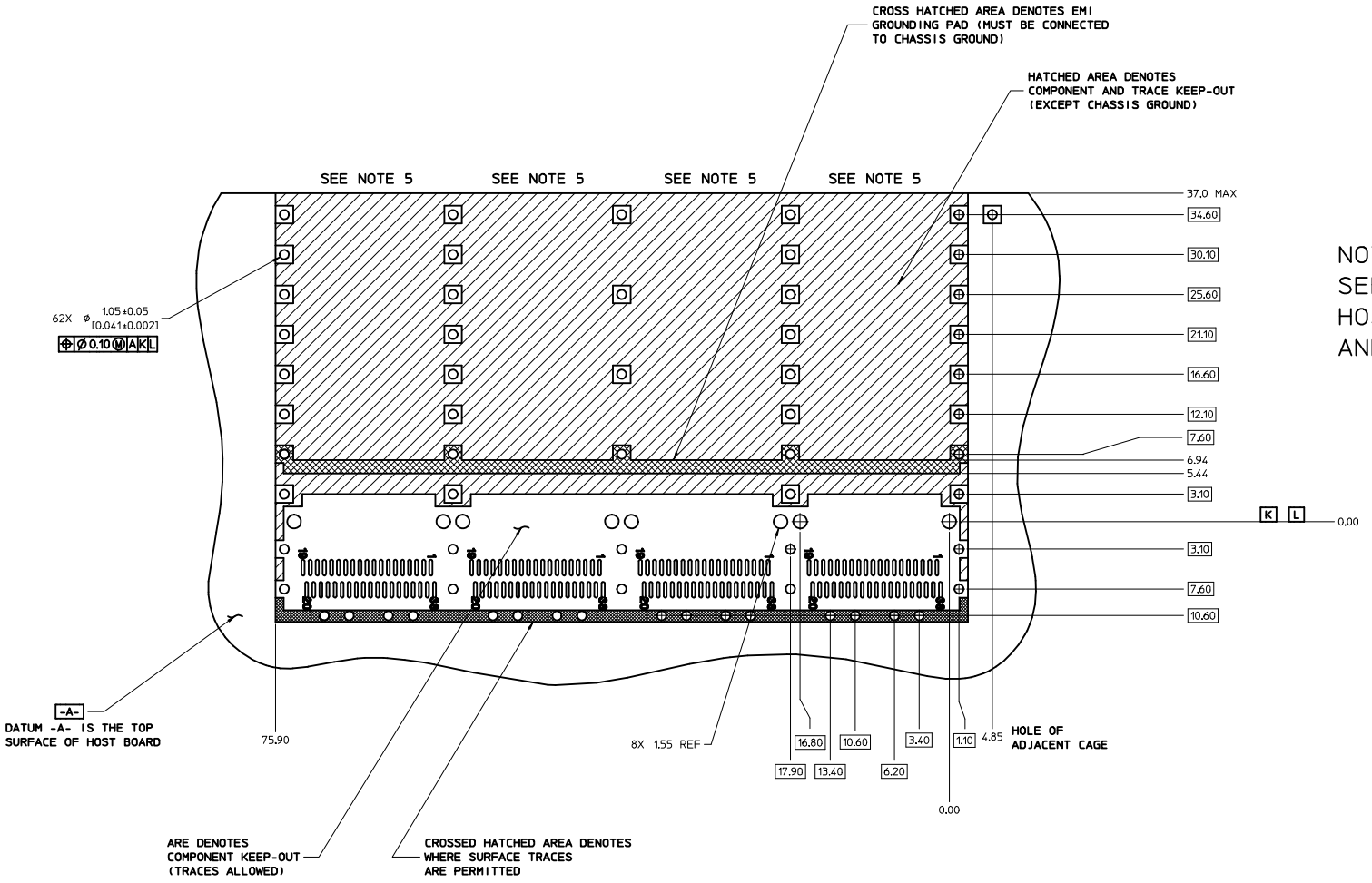

NOTE:
SEE SHEET 8 & 9 FOR HOST CONNECTOR DETAIL AND LED LOCATION DETAILS

NOTES:
1. PADS AND VIAS CONNECT TO CHASSIS GROUND (RECOMMEND PADS TO BE 2.00mm SQUARE)
2. RECOMMENDED THRU HOLE PLATING INCLUES HASL, OSP, OR IMMERSION (GOLD, SILVER, OR TIN).
3. CONNECTOR PAD LAYOUT PER QSFP MSA WILL ACCOMODATE MOLEX CONNECTOR 75586-0010 OR 75586-0011.
4. BELLY TO BELLY BOARD THICKNESS:
   NONIMAL: 2.90 [0.114"]
   MININUM: 2.48 [0.098"].
5. SPACING BETWEEN PORTS IS 19.00 [0.748"].

SEE REV HISTORY
EC NO: CPG2015-0311 2015/03/04
DRWN: WALLACE01 2015/07/01
CHKD: JERWIN 2015/07/01
APPR: KLLOYD 2015/07/01
DESCRIPTION
REV
M

QUALITY SYMBOLS
=0
=0
=0

GENERAL TOLERANCES (UNLESS SPECIFIED)

	mm	INCH
4 PLACES	± ---	± ---
3 PLACES	± ---	± ---
2 PLACES	± 0.15	± ---
1 PLACE	± 0.25	± ---
0 PLACE	± ---	± ---

ANGULAR ± 1 °
DRAFT WHERE APPLICABLE MUST REMAIN WITHIN DIMENSIONS

DIMENSION STYLE: MM ONLY
SCALE: 4:1
DESIGN UNITS: METRIC
THIRD ANGLE PROJECTION

		DATE
DRAWN BY	JERWIN	2011/05/03
CHECKED BY	CHIRSCHY	2011/05/03
APPROVED BY	RMAHMOOD	2011/06/10
MATERIAL NO.	SHT 5, 6, & 7	

TITLE: QSFP+ 1X4 GANGED CAGE ASSEMBLIES WITH ELASTOMER GASKET
molex
DOCUMENT NO.: SD-74769-0501
SHEET NO.: 10 OF 14
SIZE: D

THIS DRAWING CONTAINS INFORMATION THAT IS PROPRIETARY TO MOLEX INCORPORATED AND SHOULD NOT BE USED WITHOUT WRITTEN PERMISSION

BOARD POSITION AND BEZEL DIMENSIONS FOR BELLY TO BELLY MOUNTING

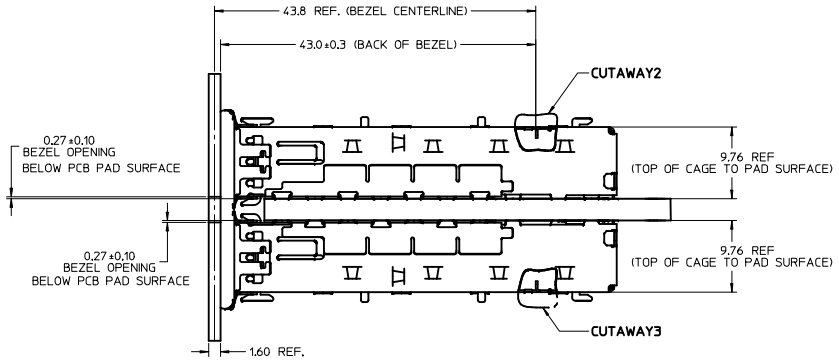

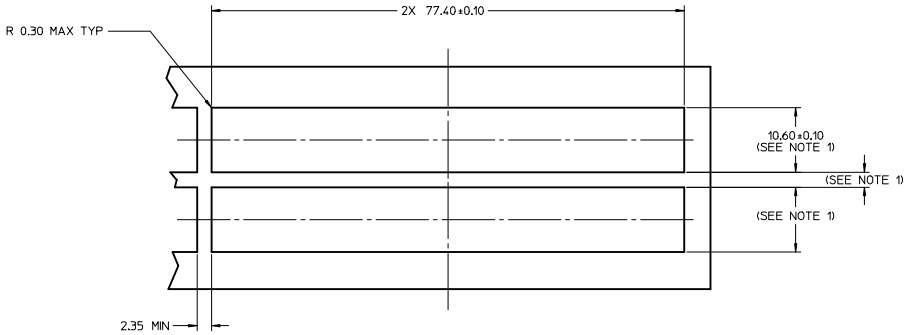

NOTES:
1. PCB THICKNESS VARIATION MUST BE CONSIDERED WHEN DETERMINING BEZEL OPENING, SIZE, AND LOCATION

BOARD POSITION AND BEZEL DIMENSIONS FOR SINGLE SIDE MOUNTING

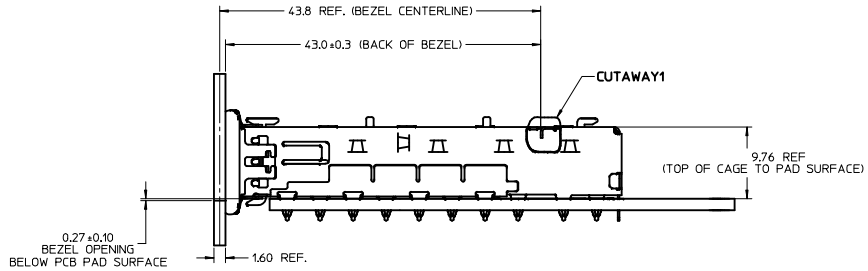

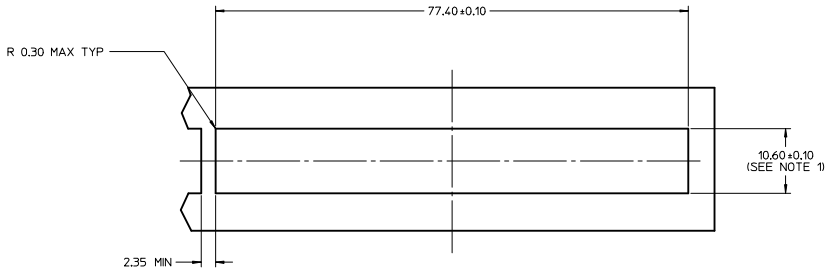

SEE REV HISTORY
EC NO: CPG2015-0311 2015/03/04
DRWN: JWALLACE01 2015/07/01
CHKD: JERWIN 2015/07/01
APPR: KLLOYD 2015/07/01
DESCRIPTION
REV
M

QUALITY SYMBOLS
▽=0
▽=0
▽=0

GENERAL TOLERANCES (UNLESS SPECIFIED)

	mm	INCH
4 PLACES	± ---	± ---
3 PLACES	± ---	± ---
2 PLACES	± 0.15	± ---
1 PLACE	± 0.25	± ---
0 PLACE	± ---	± ---

ANGULAR ± 1 °
DRAFT WHERE APPLICABLE MUST REMAIN WITHIN DIMENSIONS

DIMENSION STYLE: MM ONLY
SCALE: 2.5:1
DESIGN UNITS: METRIC
THIRD ANGLE PROJECTION

DRAWN BY: JERWIN DATE: 2011/05/03
CHECKED BY: CHIRSCHY DATE: 2011/05/03
APPROVED BY: RMAHMOOD DATE: 2011/06/10
MATERIAL NO.: SHT 5, 6, & 7

TITLE: QSFP+ 1X4 GANGED CAGE ASSEMBLIES WITH ELASTOMER GASKET

molex

DOCUMENT NO.: SD-74769-0501
SHEET NO.: 11 OF 14
SIZE: D

THIS DRAWING CONTAINS INFORMATION THAT IS PROPRIETARY TO MOLEX INCORPORATED AND SHOULD NOT BE USED WITHOUT WRITTEN PERMISSION

LIGHTPIPE CUTOUT DIMENSIONS

SINGLE LIGHT PIPE

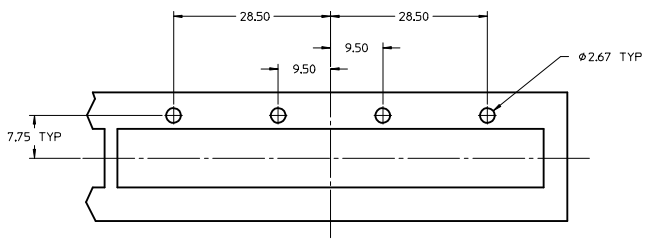

DUAL LIGHT PIPE

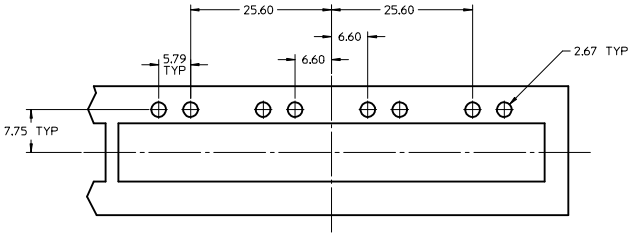

QUAD LIGHT PIPE (ROUND)

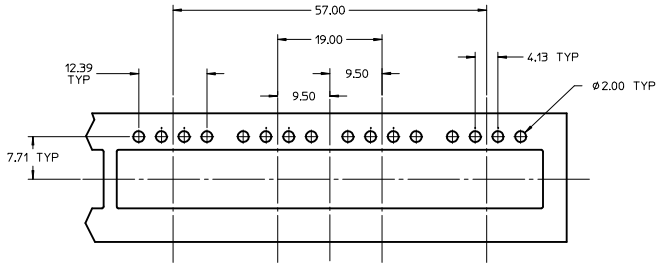

QUAD LIGHT PIPE (SQUARE)

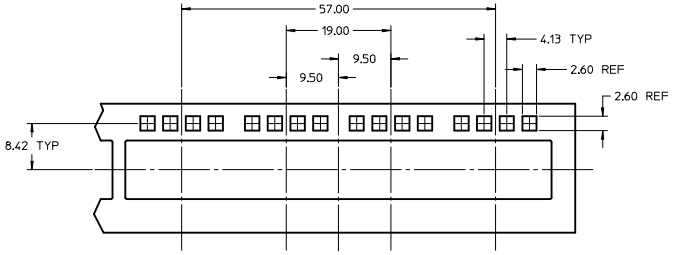

QUAD LIGHT PIPE (RECTANGULAR)

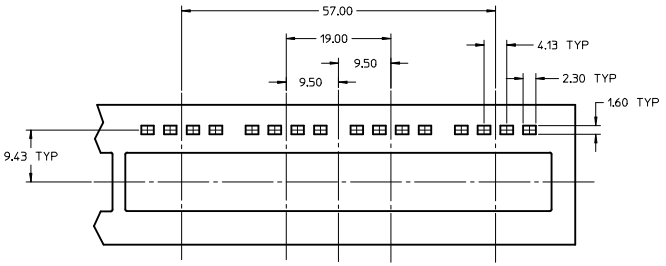

2 ROW QUAD LIGHT PIPE

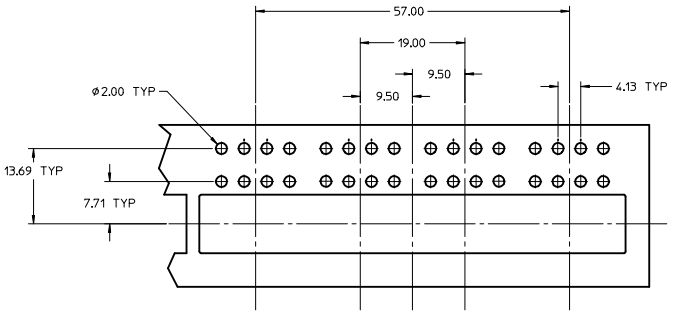

NOTES:
1. PCB THICKNESS VARIATION MUST BE CONSIDERED WHEN DETERMINING BEZEL OPENING, SIZE, AND LOCATION

SEE REV HISTORY
EC NO: CPG2015-0311 2015/03/04
DRWN: JWALLACE01 2015/07/01
CH'KD: JERWIN 2015/07/01
APPR: KLLOYD 2015/07/01
DESCRIPTION
REV
M

QUALITY SYMBOLS
=0
=0
=0

GENERAL TOLERANCES (UNLESS SPECIFIED)

	mm	INCH
4 PLACES	± ---	± ---
3 PLACES	± ---	± ---
2 PLACES	± 0.15	± ---
1 PLACE	± 0.25	± ---
0 PLACE	± ---	± ---

ANGULAR ± 1 °

DRAFT WHERE APPLICABLE MUST REMAIN WITHIN DIMENSIONS

DIMENSION STYLE: MM ONLY
SCALE: 2.25:1
DESIGN UNITS: METRIC
THIRD ANGLE PROJECTION

DRAWN BY: JERWIN DATE: 2011/05/03
CHECKED BY: CHIRSCHY DATE: 2011/05/03
APPROVED BY: RMAHMOOD DATE: 2011/06/10
MATERIAL NO.: SHT 5, 6, & 7

TITLE: QSFP+ 1X4 GANGED CAGE ASSEMBLIES WITH ELASTOMER GASKET

molex

DOCUMENT NO.: SD-74769-0501
SHEET NO.: 12 OF 14
SIZE: D

THIS DRAWING CONTAINS INFORMATION THAT IS PROPRIETARY TO MOLEX INCORPORATED AND SHOULD NOT BE USED WITHOUT WRITTEN PERMISSION

DATE	REV	DESCRIPTION
2011/05/03	A	1) INITIAL RELEASE
2012/11/21	B	SHT1: ADDED P/N 747690514 AND 747690515 TO CHART. SHT1: ADDED DIM "B" IN.
2013/06/03	C	SHT1: CHANGED 5.39 TYP TO, 5.39 REF (TO CENTER OF LEG). SHT1: ADDED P/N'S 747690508, 747690509 AND 747690516 TO CHART. SHT2: MOVED DIM 15.99 FROM DETAIL 1 TO MAIN BOARD VIEW. SHT1: REARRANGED VIEWS AND MANAGED OUT PARTS TO ADD CAGES WITHOUT HEATSINKS AND LIGHT PIPES. MOVED LIGHT PIPE DIMENSIONS FROM FRONT VIEW TO SHT 3. ADDED ISO VIEW TO SHOW UNDERBELLY EMI FINGERS AND REAR LEGS. ADDED SHEET TITLE "CAGE DETAILS" WITH P/N SHOWN. MOVED P/N TABLE TO SHT 4. MOVED HEATSINK HEIGHT TABLE TO SHT 2. ADDED DIMS FOR GASKET FRAME. REMOVED NOTES 3, 4, AND 7. CHANGED NOTE 1 TO READ QSFP+ ASSEMBLES ALSO AVAILABLE AND 1X1 (74750 SERIES), 1X2 (74767 SERIES), 1X3 (74768 SERIES), AND 1X6 (74771 SERIES) CONFIGURATIONS. ADDED NICKEL TO CAGE MATERIAL NOTE. SHT2: MOVED ALL VIEWS AND NOTES TO SHT 5. ADDED RIGHT SIDE VIEW AND VIEWS OF SINGLE AND DUAL HEATSINKS. ADDED TOL TO TABLE. SHT3: MOVED SHT 3 TO NEW SHT 6. ADDED TOP VIEW AND VIEWS OF SINGLE AND DUAL LIGHT PIPES. ADDED BACK VIEWS TO SHOW REAR LEG OPTIONS. ADDED ISO VIEWS TO SHOW ELASTOMERIC OPTIONS. SHT4: MOVED SHT 3 TO NEW SHT 7. ADDED ISO VIEWS TO SHOW CAGE ASSEMBLY OPTIONS. CHANGED THE P/N TABLE TO INDIVIDUAL TABLES SHOWING OPTIONS FOR NO HEATSINK AND LIGHT PIPES, NO LIGHT PIPES, AND HEATSINKS AND LIGHT PIPES. SHT5: MOVED REV HISTORY TO NEW SHT 9. SHT7: ADDED THE WORD "PAD" TO NOTE "BELOW PCB SURFACE" @I18, J18, AND I8. REMOVED DIM 10.60 +/- 0.10 @E12. SHT8: ADDED SHT 8 WITH BEZEL LIGHTPIPE CUTOUT POSITIONS DIMENSIONS. REMOVED DIM 10.60 +/- 0.10 D12 AND I12.
2013/08/08	D	SHT1: CHANGED FIXED TEXT @F20 & E16 TO READ RECTANGULAR INSTEAD OF SQUARE. SHT3: CORRECTED DIMENSIONS LISTED FOR THE ELASTOMER GASKETS. SHT4: ADDED P/N 747690217 TO TABLE @H11. ADDED NOTE "USES LOW PROFILE RECTANGULAR GASKET" @H11 & C17. ALIGNED THE ISO VIEWS AND TABLES. SHT5: ALIGNED TEXT "HOLE OF ADJACENT CAGE" TO CORRESPONDING DIM 4.85. ADDED TEXT HOST CONNECTOR DETAIL @C3. SHT7: ADDED REF & "TOP OF CAGE TO PAD SURFACE TO DIMS 9.76 @J12, I12, & J2. SHT8: REMOVED MULTIPLIER FROM DIM 5.79 AND MADE IT TYP @F17.
2013/08/09	E	SHT4: REMOVED LIGHTPIPE OPTION FROM P/N'S 747690514 & 747690516. MOVED P/N'S TO TABLE WITH HEATSINK NO LIGHTPIPE.
2013/09/02	F	SHT1: CHANGED TITLE TO READ "BASE CAGE DETAILS" @M10. REMOVED P/N AND "SHOWN" FROM TITLE. REMOVED NOTE LIGHT PIPE REMOVED FOR CLARITY @F4. ADDED NOTE "INNER SPRING FINGERS HAVE BEEN REMOVED FOR CLARITY" @D16. SHT2: DIM 16.0 REF WAS BROUGHT OUT TO TWO DECIMAL PLACES AND IS NOW 15.99 REF @L15. SHT3: REMOVED P/N AND "SHOWN" FROM TITLE @L10. SHT4: HEATSINK AND LIGHT PIPE CLIP WERE MISSING FROM VIEWS @K4 & E4 AND WERE MANAGED INTO THE VIEWS. SHT5: CHANGED MULTIPLIER FOR DIAMETER DIM 1.05 +/-0.05 FROM X34 TO X33 @H20. SHT6: CHANGED MULTIPLIER FOR DIAMETER DIM 1.05 +/-0.05 FROM X68 TO X62 @I18.
2013/12/19	G	SHT2: ADDED PCI, SAN AND NET HEATINKS FOR QUAD LIGHT PIPES. SHT3: ADDED QUAD LIGHT PIPE. SHT4: ADDED ISO VIEW OF QUAD LIGHT PIPE ASSEMBLY AND P/N'S 747680517 THRU 0522 TO CHART. SHT5: ADDED VIEW OF QUAD LIGHT PIPE LED LAYOUT. SHT8: ADDED VIEWS FOR SINGLE AND BELLY TO BELLY BEZEL FOR QUAD LIGHT PIPES.
2014/02/11	H	SHT1: CORRECTED GASKET DIMENSIONS FOR FRONT VIEW. SHT2: CHANGED NOTE: 1) FOR LIGHT PIPE OPTIONS SEE SHEET 3 TO, 1) FOR LIGHT PIPE OPTIONS SEE SHEET 4. REMOVED DIMENSIONS DIM "B" (SEE SHEET 6) CHANGED DIMENSION 22.55 REF TO, 22.55 +/-0.25 AND 16.31 REF TO, 16.31 +/-0.25. REMOVED TOLERANCE COLUMN FROM HEATSINK HEIGHT OPTIONS CHART AND CHANGED DIM "A" TO, DIM "A" MAX. SHT3: ADDED QUAD LIGHT PIPE (WITH SQUARE TIPS), QUAD LIGHT PIPE (WITH FLARED TIPS) AND 2 ROW LIGHT PIPE (ROUND TIPS). MOVED ALL OTHER VIEWS, LEG OPTIONS AND GASKET OPTIONS AND NOTE: 1 TO SHEET 4. SHT7: REMOVED DIM "B" COLUMN FROM P/N'S 747690529 & 0530 AND ADDED P/N'S 747690429 & 0550. ADDED VIEWS AND PART NUMBERS FOR QUAD ASSEMBLIES WITH SQUARE, FLARED TIP OR 2 ROW QUAD LIGHT PIPES SHT8: CHANGED TEXT LED CENTERLINE TO, LED CENTERLINE (NOT FOR QUAD LIGHT PIPES). ADDED LED LOCATIONS FOR THE 2 ROW QUAD TO VIEW PARTIAL 6. ADDED NEW NOTE 4 AND CHANGED HOLE PATTERN NOTE FROM "HOLE PATTERN REPEATS FOR EACH PORT. SPACING BETWEEN PORTS IS 19.00 [0.748] TO, SPACING BETWEEN PORTS IS 19.00 [0.748]. SHT9: ADDED NEW NOTE 4 AND CHANGED HOLE PATTERN NOTE FROM "HOLE PATTERN REPEATS FOR EACH PORT. SPACING BETWEEN PORTS IS 19.00 [0.748] TO, SPACING BETWEEN PORTS IS 19.00 [0.748]. SHT10: REMOVED NOTE 2. SHT11: REMOVED NOTE 2 AND ALL BELLY TO BELLY BEZELS. ADDED SQUARE AND 2 ROW BEZELS.
2014/07/22	I	SHT3: UPDATED 2 ROW QUAD LIGHT PIPE VIEW. SHT4: UPDATED 2 ROW QUAD TOP VIEW AND ADDED CUTAWAY VIEW. SHT5: ADDED ISO OF CLOSED TOP WITH SINGLE LP AND ASSOCIATED PART NUMBERS. ADDED P/N'S 747680204, 0205, 0206 & 0207 TO NO HEATSINKS/ NO LIGHT PIPES CHART. SHT7: UPDATED 2 ROW QUAD LIGHT PIPE WITH HEATSINKS VIEW.
2014/09/10	J	SHT2: REVISED DIM "B"(SEE SHEET 6) TO: DIM "B"(SEE SHEET 5, 6 & 7) SHT3: ADDED ISO VIEW OF QUAD LIGHT PIPE WITH RECTANGULAR TIP. SHT4: UPDATED DIM 4X 62.9 REF (APPLIES TO SINGLE QUAD L/P APPLICATIONS ONLY) TO, 4X 62.9 REF (APPLIES TO SINGLE QUAD L/P APPLICATIONS ONLY) (EXCEPT 747690561). CORRECTED TEXT FROM 2.6 X 41.0 [.0103 X 1.62 INCH] ROUND GASKET TO, 2.6 X 41.0 [0.103 X 1.62 INCH] ROUND GASKET SHT7: ADDED ISO VIEW AND P/N WITH DESCRIPTION FOR 747690561. SHT9: MOVED DETAIL VIEW FOR QUAD & 2 ROW QUAD LIGHT PIPES FROM SHT 8 TO, SHT 9. ADDED DETAIL VIEW FOR PCB USING 747500422 LIGHT PIPE. SHT12: ADDED BEZEL VIEW FOR QUAD LIGHT PIPE WITH RECTANGULAR TIP LED HOLES.

SEE REV HISTORY
EC NO: CPG2015-0311 2015/03/04
DRWN: WALLACE01 2015/07/01
CHKD: JERWIN 2015/07/01
APPR: KLLOYD 2015/07/01
DESCRIPTION
REV: M

QUALITY SYMBOLS
▽F=0
▽F=0
▽F=0

GENERAL TOLERANCES (UNLESS SPECIFIED)

	mm	INCH
4 PLACES	± ---	± ---
3 PLACES	± ---	± ---
2 PLACES	± 0.15	± ---
1 PLACE	± 0.25	± ---
0 PLACE	± ---	± ---

ANGULAR ± 1 °
DRAFT WHERE APPLICABLE MUST REMAIN WITHIN DIMENSIONS

DIMENSION STYLE: MM ONLY
SCALE: 1:1
DESIGN UNITS: METRIC
THIRD ANGLE PROJECTION

		DATE
DRAWN BY	JERWIN	2011/05/03
CHECKED BY	CHIRSCHY	2011/05/03
APPROVED BY	RMAHMOOD	2011/06/10

TITLE: QSFP+ 1X4 GANGED CAGE ASSEMBLIES WITH ELASTOMER GASKET
molex
MATERIAL NO.: SHT 5, 6, & 7
DOCUMENT NO.: SD-74769-0501
SHEET NO.: 13 OF 14
SIZE: D

THIS DRAWING CONTAINS INFORMATION THAT IS PROPRIETARY TO MOLEX INCORPORATED AND SHOULD NOT BE USED WITHOUT WRITTEN PERMISSION

DATE	REV	DESCRIPTION
2014/11/14	K	SHT2: ADDED VIEW FOR ASSEMBLY W/ SINGLE QUAD LIGHT PIPE. REVISED DIM 'B' (SEE SHEET 5, 6 & 7) TO, DIM 'B' (SEE SHEET 5 & 6) Ø M18. SHT3: ADDED VIEW AND CHART FOR LED CLEARANCE. SHT4: ADDED VIEWS FOR ASSEMBLIES USING ROUND TIP QUAD LIGHT PIPE AND SQUARE/ FLARED/ RECTANGULAR TIP LIGHT PIPES. SHT7: ADDED DIM 'B' & 'C' COLUMNS TO CHART FOR 2 ROW QUAD LIGHT PIPE WITH HEAT SINKS ASSEMBLIES. SHT10: CHANGED NOTE: SEE PREVIOUS SHEET FOR HOST CONNECTOR DETAIL AND LED LOCATION DETAILS TO, NOTE: SEE SHEET 8 & 9 FOR HOST CONNECTOR DETAIL AND LED LOCATION DETAILS
2014/12/18	L	SHT6: ADDED P/N 747690551 TO CHART.
2015/07/01	M	SHT6: ADDED GASKET STYLE COLUMN AND REVISED TIP STYLE COLUMN NOTE: 'WAS' SQUARE. 'NOW READS' ROUND Ø H11.

SEE REV HISTORY
EC NO: CPG2015-0311 2015/03/04
DRWN: JWALLACE01 2015/07/01
CHKD: JERWIN 2015/07/01
APPR: KLLOYD 2015/07/01
DESCRIPTION
REV
M

QUALITY SYMBOLS
▽=0
▽=0
▽=0

GENERAL TOLERANCES (UNLESS SPECIFIED)

	mm	INCH
4 PLACES	± ---	± ---
3 PLACES	± ---	± ---
2 PLACES	± 0.15	± ---
1 PLACE	± 0.25	± ---
0 PLACE	± ---	± ---

ANGULAR ± 1 °
DRAFT WHERE APPLICABLE MUST REMAIN WITHIN DIMENSIONS

DIMENSION STYLE: MM ONLY
SCALE: 3:1
DESIGN UNITS: METRIC
THIRD ANGLE PROJECTION

DRAWN BY: JERWIN DATE: 2011/05/03
CHECKED BY: CHIRSCHY DATE: 2011/05/03
APPROVED BY: RMAHMOOD DATE: 2011/06/10
MATERIAL NO.: SHT 5, 6 & 7
SIZE: D

TITLE: QSFP+ 1X4 GANGED CAGE ASSEMBLIES WITH ELASTOMER GASKET

molex

DOCUMENT NO.: SD-74769-0501
SHEET NO.: 14 OF 14

THIS DRAWING CONTAINS INFORMATION THAT IS PROPRIETARY TO MOLEX INCORPORATED AND SHOULD NOT BE USED WITHOUT WRITTEN PERMISSION