Part Number : 936010539
Product Description : GWconnect Frame for Size 6B «44x27» Hoods, Die-cast Zinc
Series Number : 93601
Status : Active
Product Category : Heavy-Duty Accessories
Engineering Number : 7706.3515.0

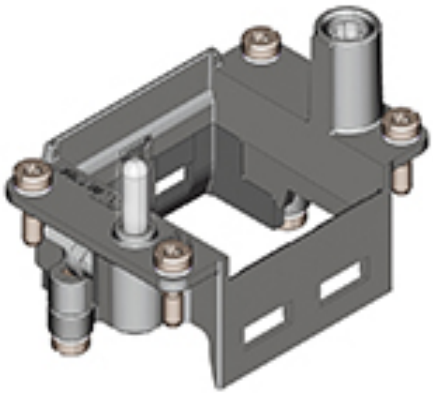

## Product Environment Compliance

### Compliance

| | |
|---|---|
| GADSL/IMDS | Not Relevant |
| China RoHS | |
| EU ELV | Not Relevant |
| Low-Halogen Status | Low-Halogen per IEC 61249-2-21 |
| REACH SVHC | Not Contained per D(2024)4144-DC (27 June 2024) |
| EU RoHS | Compliant per EU 2015/863 |

Multiple Part Product Compliance Statements

- Eu RoHS
- REACH SVHC
- Low-Halogen

Multiple Part Industry Compliance Documents

- IPC 1752A Class C
- IPC 1752A Class D
- Molex Product Compliance Declaration
- IEC-62474
- chemSHERPA (xml)

EU RoHS Certificate of Compliance

## Part Details

### General

| | |
|---|---|
| Status | Active |

| | |
|---|---|
| Category | Heavy-Duty Accessories |
| Series | 93601 |
| Description | GWconnect Frame for Size 6B «44x27» Hoods, Die-cast Zinc |
| Product Name | GWconnect |
| Type | EMC, HE, HP-HE, STD |
| UPC | 887191831329 |

## Physical

| | |
|---|---|
| Accessory Type | Frame |
| Material - Frame | Die-cast Zinc |
| Net Weight | 59.000/g |
| Packaging Type | Bag |

## Use with Part(s)

| Description | Part Number |
|---|---|
| Use With | Size 6B «44x27» Hoods and 2 Modules |