This document was generated on 09/16/2019

PLEASE CHECK WWW.MOLEX.COM FOR LATEST PART INFORMATION

Part Number: 0901700030
Status: Active
Overview: QF-50™
Description: 2.54mm Pitch QF-50 Strain Relief, DIN 41651, Standard Low Profile, 30 Circuits

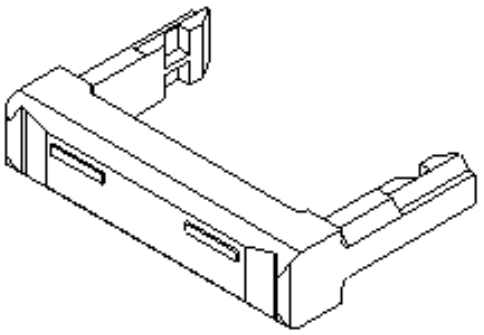

Series image - Reference only

Documents:

3D Model
Drawing (PDF)
Product Specification PS-99020-0015-001 (PDF)
Packaging Specification PK-90170-001-001 (PDF)
RoHS Certificate of Compliance (PDF)

General

Product Family	Ribbon Cable / Wire Trap Connectors
Series	90170
Component Type	Strain Relief
Glow-Wire Capable	No
Overview	QF-50™
Product Name	QF-50
UPC	800753533431

Physical

Circuits (Loaded)	N/A
Circuits (maximum)	30
Color - Resin	Black
Entry Angle	N/A
Lock to Mating Part	Yes
Material - Plating Mating	N/A
Material - Resin	Polyester
Net Weight	0.838/g
Number of Rows	2
PCB Locator	No
PCB Retention	None
Packaging Type	Bag
Pitch - Mating Interface	1.27mm
Polarized to Mating Part	No
Stackable	No
Temperature Range - Operating	-25° to +85°C
Wire Insulation Diameter	N/A
Wire Size AWG	N/A
Wire/Cable Type	Ribbon Cable

Electrical

Current - Maximum per Contact	1.0A
Voltage - Maximum	250V AC/DC

Material Info

Reference - Drawing Numbers

Packaging Specification	PK-90170-001-001
Product Specification	PS-99020-0015-001
Sales Drawing	SD-90170

EU ELV
Not Relevant

EU RoHS
Compliant

China RoHS

REACH SVHC
Not Contained Per - ED/71/2019 (16 July 2019)

Halogen-Free Status
Not Low-Halogen

For more information, please visit Contact US

China ROHS	Green Image
ELV	Not Relevant
RoHS Phthalates	Not Contained

Search Parts in this Series
90170 Series

Use With
5320 , 90635

This document was generated on 09/16/2019

PLEASE CHECK WWW.MOLEX.COM FOR LATEST PART INFORMATION