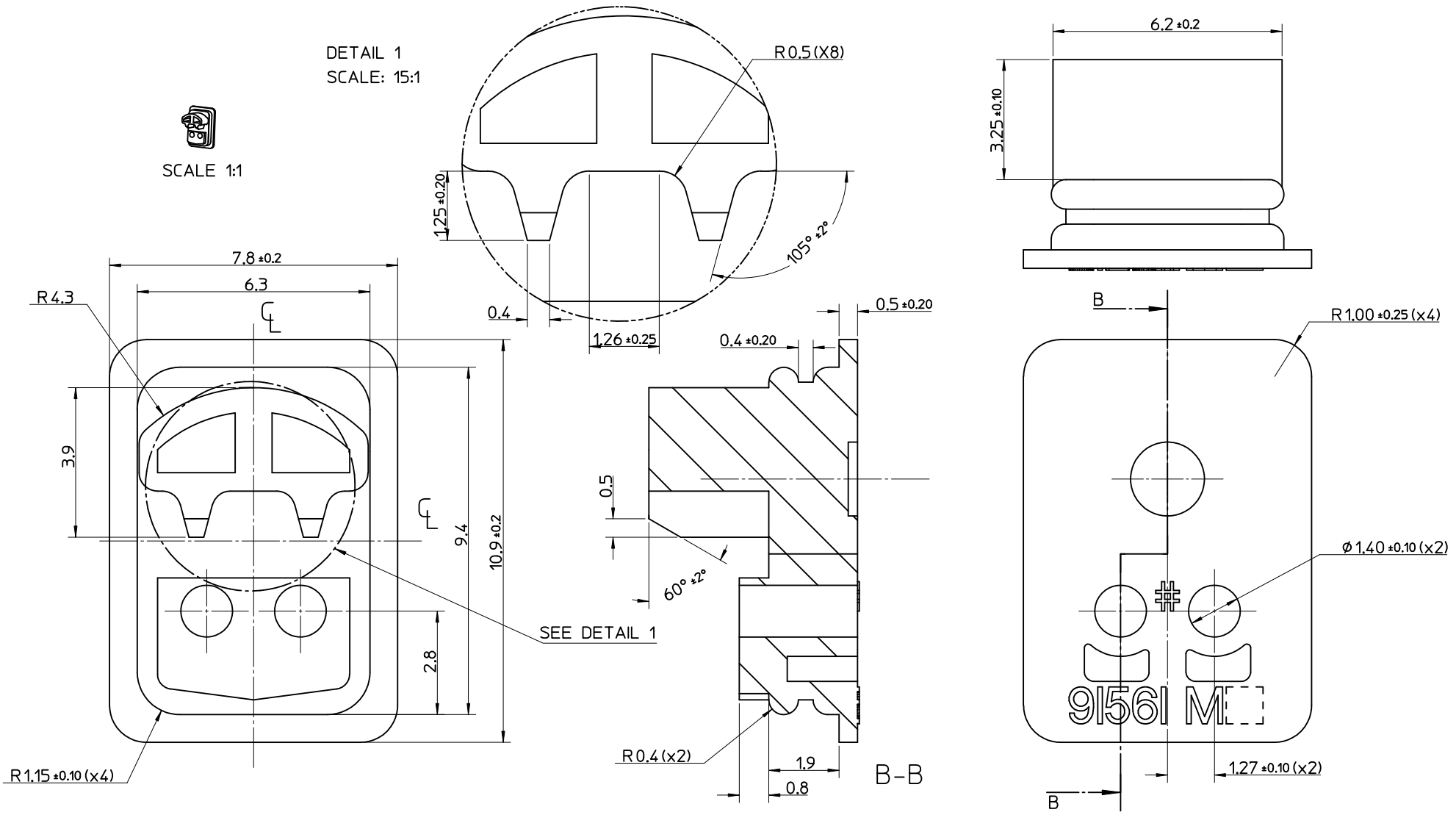

NOTES:
1. MATERIAL: TPE 80A SHORE HARDNESS.
   COLOUR: BLACK.
2. FINISH: N/A.
3. FOR PRODUCT SPECIFICATION SEE PS-91560-003
4. PACKAGING: SEE PACKAGING SPECIFICATION PK-91561-003
5. THIS PART CONFORMS TO CLASS B REQUIREMENTS OF COSMETIC SPECIFICATION PS-45499-002.

REVISED NOTES
EC NO: UCP2010-1407 DRWN:MKIPPER 2009/12/14 CH'KD: JBELL 2009/12/16 APPR: FSMITH 2009/12/17
D1

REV	DESCRIPTION

QUALITY SYMBOLS
▼ - 0
▽ (C) - 0

GENERAL TOLERANCES (UNLESS SPECIFIED)

	mm	INCH
4 PLACES	± ---	± ---
3 PLACES	± ---	± ---
2 PLACES	± 0.05	± ---
1 PLACE	± 0.1	± ---
ANGULAR ± 2 °		

DRAFT WHERE APPLICABLE MUST REMAIN WITHIN DIMENSIONS

SCALE	10:1
DESIGN UNITS	METRIC
	THIRD ANGLE PROJECTION
	REVISE ON CAD ONLY
DIMENSION STYLE	MM ONLY
TITLE	2.54MM KK CRP SEAL
DRAWN BY / DATE	LKIERNAN 13/07/01
CHECKED BY / DATE	BMAGUIRE 3/10/01
APPROVED BY / DATE	MWILHITE 3/10/01
	molex MOLEX INCORPORATED
MATERIAL NO.	91561-0001
DOCUMENT NO.	SD-91561-001
SHEET NO.	1 OF 1

THIS DRAWING CONTAINS INFORMATION THAT IS PROPRIETARY TO MOLEX INCORPORATED AND SHOULD NOT BE USED WITHOUT WRITTEN PERMISSION

A3