EJT1

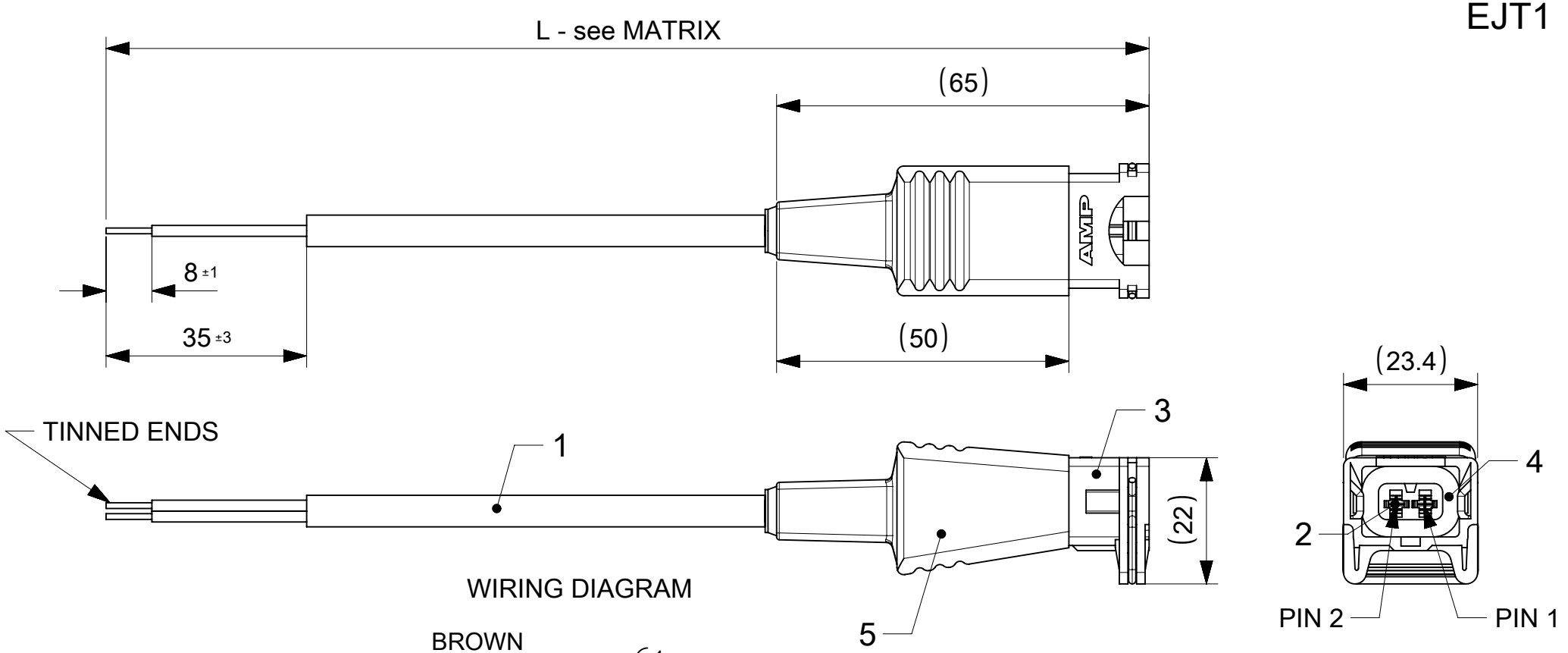

WIRING DIAGRAM



NOTE:
1. MATRIX AND PART LIST ON SHEET 2
2. DRAWING REPLACES SD-121046-002
3. VOLTAGE RATING: 24V

BILL OF MATERIALS

ITEM	QTY.	DESCRIPTION	MATERIAL	FINISH/COLOR
1	-	CABLE	SEE MATRIX	-
2	2	CONTACT FEMALE	PH. BRONZE	-
3	1	HOUSING 2P	PA6.6	BLACK
4	1	GASKET	SILICONE	WHITE
5	-	MOULDING MATERIAL	PP	BLACK

DOCUMENT STATUS	P1	RELEASE DATE	2021/10/19 12:55:13

THIS DRAWING CONTAINS INFORMATION THAT IS PROPRIETARY TO MOLEX ELECTRONIC TECHNOLOGIES, LLC AND SHOULD NOT BE USED WITHOUT WRITTEN PERMISSION

FUNCTIONAL SYMBOLS
FA = 0
FC = 0
FD = 0
DIVISIONAL SYMBOLS

DIMENSION UNITS: mm
SCALE: 1:1
GENERAL TOLERANCES (UNLESS SPECIFIED)
ANGULAR TOL ± °
4 PLACES ±
3 PLACES ±
2 PLACES ±
1 PLACE ±
0 PLACES ±
DRAFT WHERE APPLICABLE MUST REMAIN WITHIN DIMENSIONS

CURRENT REV DESC:
EC NO: 681912
DRWN: APAWLAK01 2021/10/12
CHK'D: RSILLER 2021/10/19
APPR: RSILLER 2021/10/19
INITIAL REVISION:
DRWN: APAWLAK01 2021/10/12
APPR: RSILLER 2021/10/19

THIRD ANGLE PROJECTION
DRAWING: A4-SIZE
SERIES: 121046

molex

JUNIOR TIMER 2P FE STR EJT1XXXXXX

PRODUCT CUSTOMER DRAWING

DOCUMENT NUMBER	DOC TYPE	DOC PART	REVISION
1210460005	PSD	000	A

MATERIAL NUMBER	CUSTOMER	SHEET NUMBER
SEE SHEET 2	GENERAL MARKET	1 OF 2

PART No MATRIX

E	J	T	1	X	X	X	X	X	X

JUNIOR CONNECTORS

CONNECTOR TYPE:
1 - 2 WIRES, STRAIGHT

CABLE TYPE:
B3 - PUR BLACK 2x18AWG
N2 - PVC BLACK 2x0.5mm²
N3 - PVC BLACK 2x0.75mm²
P2 - PUR BLACK 2x0.5mm²
P3 - PUR BLACK 2x0.75mm²

HEAD COLOR:
N - BLACK
A - UL BLACK

CABLE LENGTH [cm]
050 = 50cm
300 = 300cm
10K = 1000cm

PART LIST

MOLEX PN	ENGINEERING NO	L±TOL. [mm]
1210460005	EJT1P3N200	2000±30
1210460006	EJT1P3N500	5000±40
1210460008	EJT1P3N300	3000±30
1210460009	EJT1P2N100	1000±20
1210460011	EJT1P3N100	1000±20
1210460012	EJT1P3N800	8000±50
1210460013	EJT1N3N150	1500±30
1210460014	EJT1P2N300	3000±30
1210460015	EJT1P3N150	1500±30
1210460024	EJT1P2N400	4000±40
1210460025	EJT1N3N100	1000±20
1210460026	EJT1P2N600	6000±50
1210460027	EJT1P3N10K	10000±50
1210460028	EJT1N3N200	2000±30
1210460034	EJT1P2N10K	10000±50
1210560056	EJT1N2N300	3000±30
1210560201	EJT1N2N100	1000±20
1210560249	EJT1B3A500	5000±40

TABLE OF LENGHT TOLERANCES		
OVER	UP TO AND INCLUDING	TOLERANCE
0	1000	±20
1000	3000	±30
3000	5000	±40
5000	10000	±50
10000	15000	±100
15000	20000	±150
20000		±L/100

THIS DRAWING CONTAINS INFORMATION THAT IS PROPRIETARY TO MOLEX ELECTRONIC TECHNOLOGIES, LLC AND SHOULD NOT BE USED WITHOUT WRITTEN PERMISSION

FUNCTIONAL SYMBOLS
FA = 0
FC = 0
FD = 0
DIVISIONAL SYMBOLS

DIMENSION UNITS: mm
SCALE: 1:1

GENERAL TOLERANCES (UNLESS SPECIFIED)

ANGULAR TOL	± °
4 PLACES	±
3 PLACES	±
2 PLACES	±
1 PLACE	±
0 PLACES	±

DRAFT WHERE APPLICABLE MUST REMAIN WITHIN DIMENSIONS

CURRENT REV DESC:

EC NO: 681912
DRWN: APAWLAK01 2021/10/12
CHK'D: RSILLER 2021/10/19
APPR: RSILLER 2021/10/19

INITIAL REVISION:
DRWN: APAWLAK01 2021/10/12
APPR: RSILLER 2021/10/19

molex

JUNIOR TIMER 2P FE STR EJT1XXXXXX

PRODUCT CUSTOMER DRAWING

DOCUMENT NUMBER	DOC TYPE	DOC PART	REVISION
1210460005	PSD	000	A

THIRD ANGLE PROJECTION	DRAWING	SERIES	MATERIAL NUMBER	CUSTOMER	SHEET NUMBER
	A4-SIZE	121046	SEE PART LIST	GENERAL MARKET	2 OF 2

DOCUMENT STATUS	P1	RELEASE DATE	2021/10/19 12:55:13

PN KEY

E J T 1 X X X X X X

JUNIOR CONNECTORS

CONNECTOR TYPE:
1 - 2 WIRES, STRAIGHT

CABLE TYPE, SEE SHEET 2, CHART 1 AND CHART 2

HEAD COLOR:
G=GRAY; N=BLACK; T=TRANSPARENT; A=CSA-UL BLACK; B=CSA-UL GRAY

CABLE LENGHT IN CENTIMETRES:
EXAMPLE: 050=50 CM, 300=300 CM.

Table of lenght tolerances [mm]		
Over	Up to and including	Tolerance
0	1000	±20
1000	3000	±30
3000	5000	±40
5000	10000	±50
10000	15000	±100
15000	20000	±150
20000		±L/100

TABLE 1

MOLEX PN	Engineering No.	L [mm]
1210460005	EJT1P3N200	2000
1210460006	EJT1P3N500	5000
1210460008	EJT1P3N300	3000
1210460009	EJT1P2N100	1000
1210460011	EJT1P3N100	1000
1210460012	EJT1P3N800	8000
1210460013	EJT1N3N150	1500
1210460014	EJT1P2N300	3000
1210460015	EJT1P3N150	1500
1210460024	EJT1P2N400	4000
1210460025	EJT1N3N100	1000
1210460026	EJT1P2N600	6000
1210460027	EJT1P3N10K	10000
1210460028	EJT1N3N200	2000
1210460034	EJT1P2N10K	10000
1210560056	EJT1N2N300	3000
1210560201	EJT1N2N100	1000

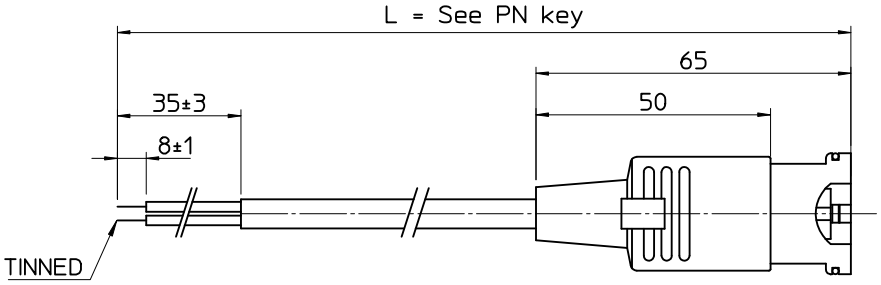

ELECTRICAL DIAGRAM

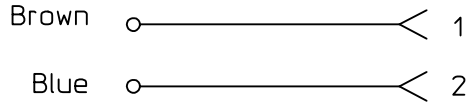

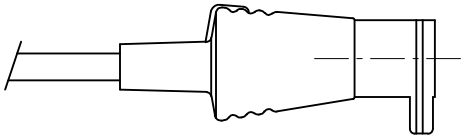

Face View

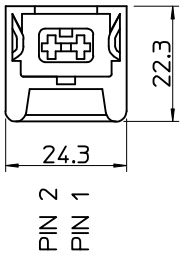

NOTES:
1. Dimensions without tolerances are referential

ORIGINAL RELEASE EC NO: IPG2016-0461 DRWN:JMARSZALEK 2014/05/31 CH'KD: APPR:MIWASIECZKO 2015/09/28 DESCRIPTION	QUALITY SYMBOLS ▼=0 ⓒ=0	GENERAL TOLERANCES (UNLESS SPECIFIED)	DIMENSION STYLE MM ONLY	SCALE -	DESIGN UNITS METRIC	THIRD ANGLE PROJECTION	
		mm / INCH	DRAWN BY JMARSZALEK DATE 2014/05/31	TITLE EJT1XXXXXX JUNIOR TIMER 2P FE STR			
		4 PLACES ± --- / ± ---	CHECKED BY DATE				
		3 PLACES ± --- / ± ---					
		2 PLACES ± --- / ± ---	APPROVED BY DATE MIWASIECZKO 2015/09/28	molex			
		1 PLACE ± --- / ± ---					
		0 PLACE ± --- / ± ---	MATERIAL NO. SEE PN KEY	DOCUMENT NO. SD-121046-002	SHEET NO. 1 OF 2		
REV A		ANGULAR ±---° DRAFT WHERE APPLICABLE MUST REMAIN WITHIN DIMENSIONS	SIZE A3	THIS DRAWING CONTAINS INFORMATION THAT IS PROPRIETARY TO MOLEX INCORPORATED AND SHOULD NOT BE USED WITHOUT WRITTEN PERMISSION			

TABLE 2 - CABLES

TABLE 2 - CABLES

Molex PN Raw cable	Cable type	Cable code	Wires no.	Cross Section	Jacket material	Jacket color	Diameter Ø [mm]	Wire colors
1210180384	R	3	3	0.75 mm²	TPR HAL. FREE	Black	6.5±0.2	BN, BU, GN/YE
1210180094	T	3	3	0.75 mm²	PUR CSA/UL 20668	Yellow	6.5±0.2	BN, BU, GN/YE
1210180309	Y	3	3	0.75 mm²	SILICONE RUBBER	Red	6.5±0.2	BN, BU, GN/YE
1210180081	F	4	3	1 mm²	PVC CNOMO	Grey	7.1+0.2/-0	BK1, BK2, GN/YE
1210180042	I	4	2	1 mm²	PVC CEI 2022 II O.R.	Grey	7.1+0.2/-0	BN, BU
1210180079	I	4	3	1 mm²	PVC CEI 2022 II O.R.	Grey	7.1+0.2/-0	BN, BU, GN/YE
1210180036	N	4	2	1 mm²	PVC H05VV-F	Black	6.5±0.2	BN, BU
1210180082	N	4	3	1 mm²	PVC H05VV-F	Black	6.9±0.2	BN, BU, GN/YE
1210180117	R	4	3	1 mm²	TPR HAL. FREE	Black	7.1±0.2	BN, BU, GN/YE
1210180085	N	5	3	1.5 mm²	PVC H05VV-F	Black	7.9±0.2	BN, BU, GN/YE
1210180313	I	6	2	0.35 mm²	PVC CEI 2011	Grey	4.8±0.2	BN, WH
1210180149	I	9	4	0.75 mm²	PVC CEI 2022 II	Grey	7.3±0.2	BN, BU, BK, GN/YE

TABLE 1 - TYPES OF CABLES

Code	Cable types	Features	Cross Section
N	PVC	Application general purpose cable which has good resistance to water, but usually poor oil resistance.	0.5 mm² 0.75 mm² 1 mm²
I	CEI	Approved to IEC 332-2A, flame retardant and self extinguishing. Limited resistant to mineral oils.	0.5 mm² 0.75 mm² 1 mm²
P	PUR	Offer good resistance to oil and chemicals. Can swell when constantly immersed in water.	0.5 mm² 0.75 mm² 1 mm²
A	PVC CSA-UL	Approved to CSA-UL 2661, application general purpose cable which has good resistance to water, but usually poor oil resistance.	20 AWG 18 AWG
B	PUR CSA-UL	Approved to CSA-UL 20668, very good resistance to oil and chemicals.	20 AWG 18 AWG

ORIGINAL RELEASE
EC NO: IPG2016-0461
DRWN: JMARSZALEK 2014/05/31
CH'KD:
APPR: MIWASIECZKO 2015/09/28
DESCRIPTION
A
REV

QUALITY SYMBOLS
▼=0
Ⓒ=0

GENERAL TOLERANCES (UNLESS SPECIFIED)

	mm	INCH
4 PLACES	± ---	± ---
3 PLACES	± ---	± ---
2 PLACES	± ---	± ---
1 PLACE	± ---	± ---
0 PLACE	± ---	± ---
ANGULAR ±---°		

DRAFT WHERE APPLICABLE MUST REMAIN WITHIN DIMENSIONS

DIMENSION STYLE: MM ONLY
SCALE: -
DESIGN UNITS: METRIC
THIRD ANGLE PROJECTION

DRAWN BY: JMARSZALEK DATE: 2014/05/31
CHECKED BY: DATE:
APPROVED BY: MIWASIECZKO DATE: 2015/09/28
MATERIAL NO.: SEE PN KEY

TITLE: EJT1XXXXXX
JUNIOR TIMER 2P FE STR

molex

DOCUMENT NO.: SD-121046-002
SHEET NO.: 2 OF 2
SIZE: A3

THIS DRAWING CONTAINS INFORMATION THAT IS PROPRIETARY TO MOLEX INCORPORATED AND SHOULD NOT BE USED WITHOUT WRITTEN PERMISSION