EV4864A-BD-00A

180V, 64-Channel Analog Switch Evaluation Board

DESCRIPTION

The EV4864A-BD-00A is an evaluation board for the MP4864A, a high voltage 64-channel analog switch. The MP4864A is designed for medical ultrasound application. It can also be used for non-destructive test (NDT) as the application is very similar to medical ultrasound.

The high voltage analog switches are used to multiplex the transmitter and receiver circuitries to different piezoelectric transducer (PZT) elements. The MP4864A has a resistor to ground on the output pins, SWout. This is to help ensure there is no significant DC voltage built up across the PZT element. The switches can be turned on/off via a serial 64-bit shift register. The serial control interface will help minimize the number of I/O connection.

FEATURES

- 64 Channels
- No High Voltage Bias Required
- Up to ±90V Analog Signal
- 14Ω Typical Switch Resistance
- ±2.0A Typical Switch Peak Current
- 80MHz Clock Frequency at VLL=5.0V
- 40MHz Clock Frequency at VLL=3.3V
- Integrated Bleed Resistors – MP4864A

APPLICATIONS

- Medical Ultrasound
- Industrial NDT

All MPS parts are lead-free, halogen free, and adhere to the RoHS directive. For MPS green status, please visit MPS website under Quality Assurance. “MPS” and “The Future of Analog IC Technology” are Registered Trademarks of Monolithic Power Systems, Inc.

EV4864A-BD-00A EVALUATION BOARD

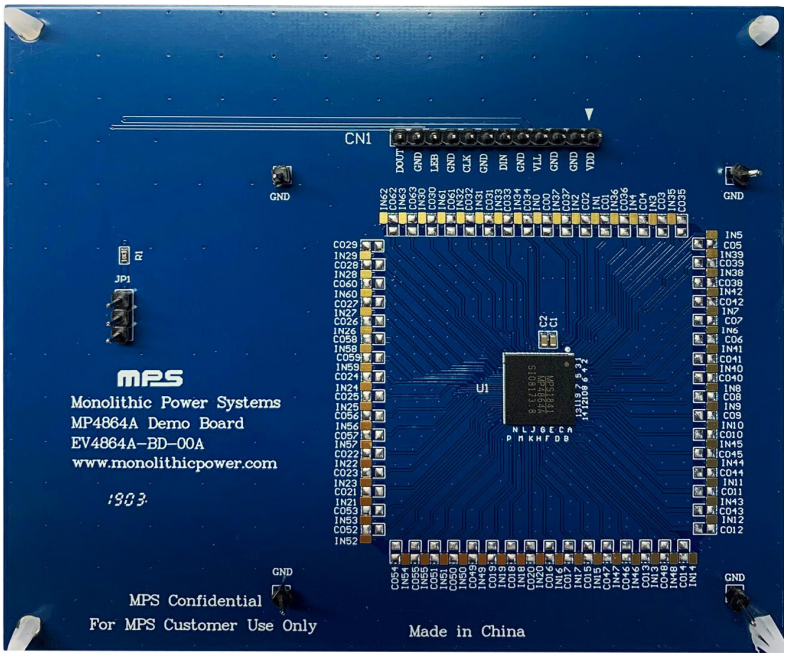

(L x W x H)
(4.5” x 3.8” x 0.0625”)

Board Number	MPS IC Number
EV4864A-BD-00A	MP4864AGBD

MPS Proprietary Information. Patent Protected. Unauthorized Photocopy and Duplication Prohibited.
© 2019 MPS. All Rights Reserved.

EVALUATION BOARD SCHEMATIC

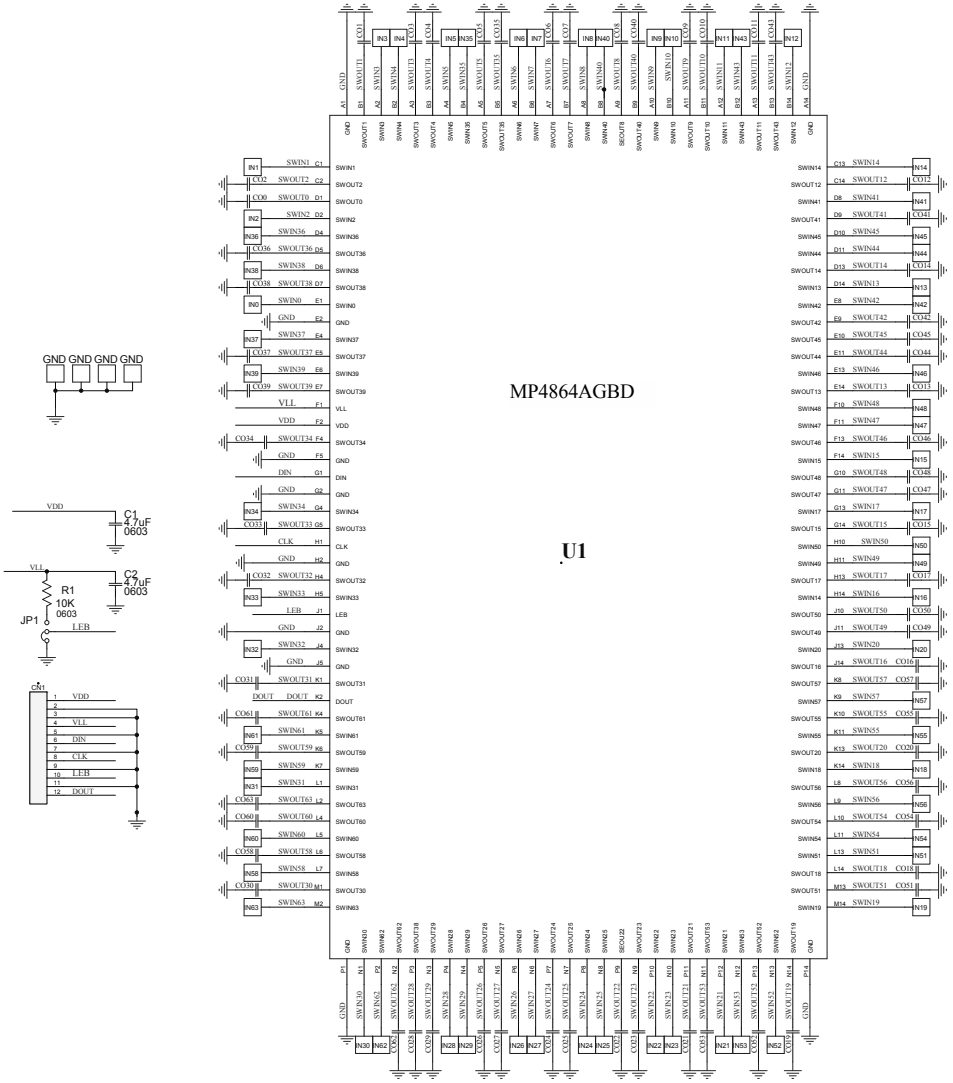

EV4864A-BD-00A BILL OF MATERIALS

Qty	Ref	Value	Description	Package	Manufacturer	Part Number
2	C1, C2	4.7uF	Cer. Cap, 16V, 0603, X5R	CAP0603	muRata	GRM188R61C475KAAJD
64	CO0 to CO63	NS	For Load Capacitor	CAP0805	muRata	
1	R1	10K	Film Res	RES0603	Yageo	RC0603FR-0710KL
1	JP1	3pins	3 Pins Jumper			
1	CN1	12Pins	12 Pins Connector		General	General
1	U1	BGA	144 pind BGA Socket	BGA144	MPS	MP4864AGBD
4	TP1-4	NS	TP for GND		NS	General

MPS Proprietary Information. Patent Protected. Unauthorized Photocopy and Duplication Prohibited.
© 2019 MPS. All Rights Reserved.

PRINTED CIRCUIT BOARD LAYOUT

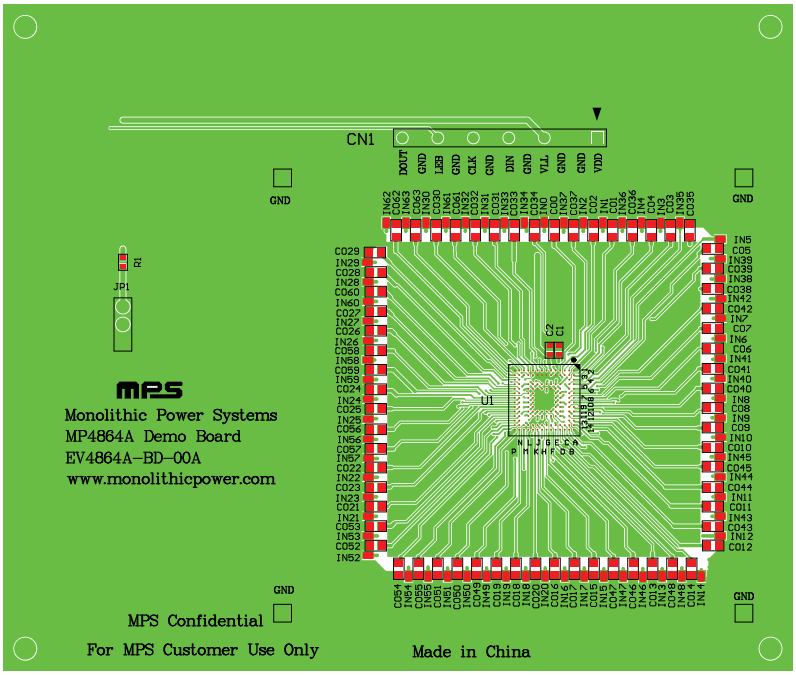

Figure 1: Top Silk Layer

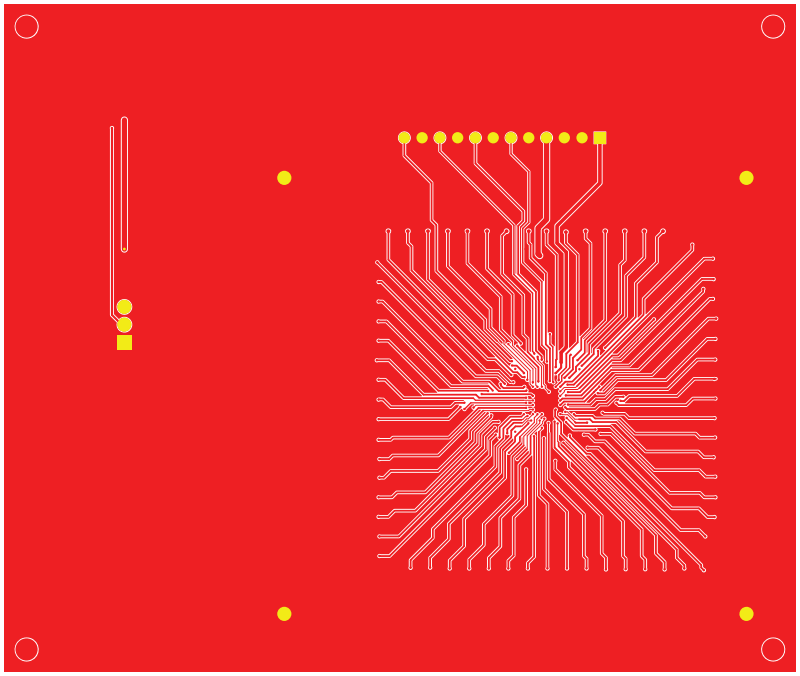

Figure 2: Bottom Layer

MPS Proprietary Information. Patent Protected. Unauthorized Photocopy and Duplication Prohibited.
© 2019 MPS. All Rights Reserved.

FUNCTIONAL BLOCK DIAGRAM

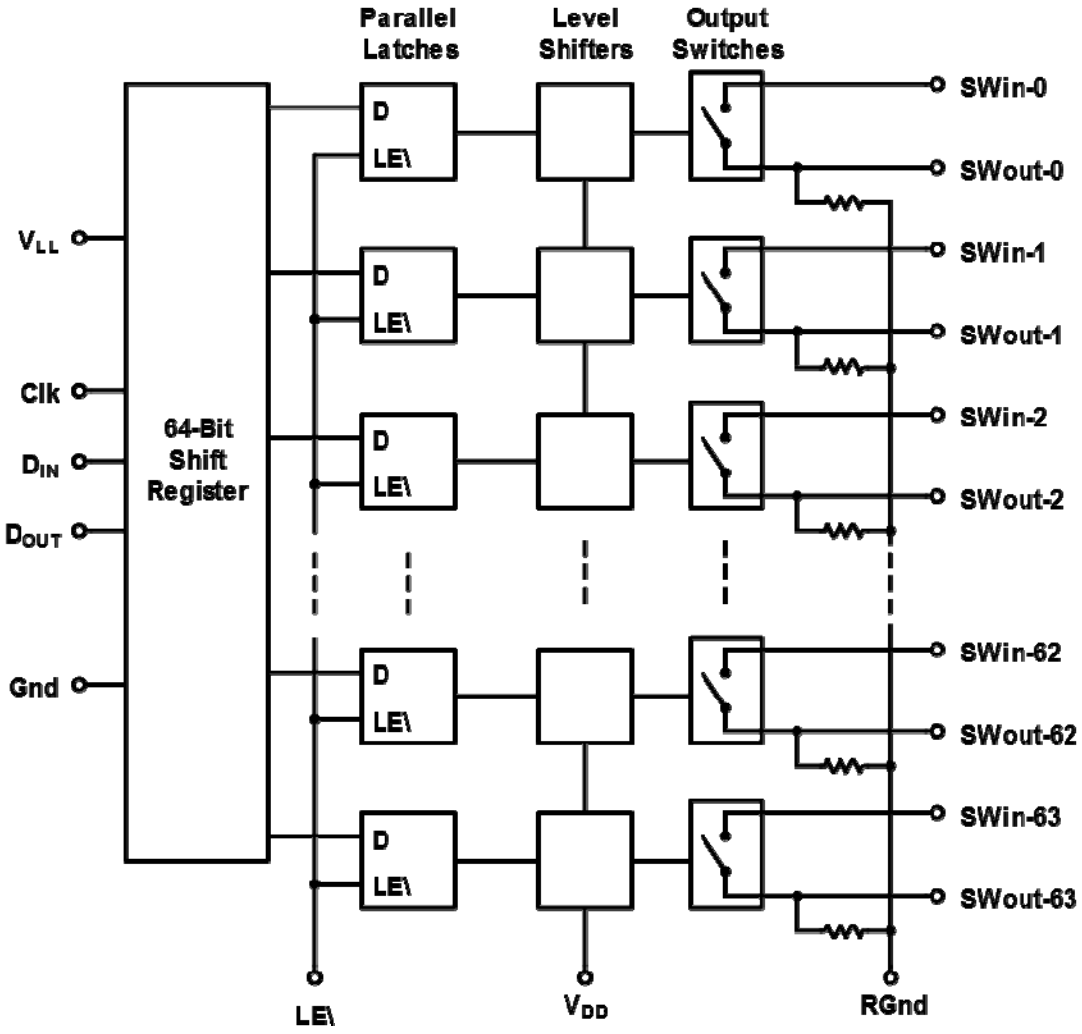

MPS Proprietary Information. Patent Protected. Unauthorized Photocopy and Duplication Prohibited.
© 2019 MPS. All Rights Reserved.

QUICK START GUIDE

1) Only two low voltage DC supplies are required; V_{LL} and V_{DD}
   Logic interface, V_{LL}: 2.7V to 5.5V
   Internal translator, V_{DD}: 10V to 14V
   Connections to V_{LL} and V_{DD} can be made through the 12-pin header on the board.

2) The analog switches are controlled by a 64-bit serial shift register. A logic high will close the switch and a logic low will open the switch. There are four logic control pins; Clk, Din, Dout and LE_bar. Connections to these pins can be made through the 12-pin header on the board.

3) Pads are available for the 64 analog switches.
   Connect the pulser (transmitter) to the IN0 to IN63 pads.
   Connect the piezoelectric transducers to C0 to C63 pads.
   C0 to C63 are pads for an 0805 pattern. This allows for a 330pF chip capacitor to be used as a reference load.

Additional information is available in the MP4864A data sheet.

NOTICE: The information in this document is subject to change without notice. Please contact MPS for current specifications. Users should warrant and guarantee that third party Intellectual Property rights are not infringed upon when integrating MPS products into any application. MPS will not assume any legal responsibility for any said applications.

MPS Proprietary Information. Patent Protected. Unauthorized Photocopy and Duplication Prohibited.
© 2019 MPS. All Rights Reserved.