Murata Power Solutions

766 Series

Pulse Transformers



FEATURES

- RoHS compliant
- 5 configurations
- Inductance to 11.7mH
- Up to 50 Vμs E_T
- Industry standard pinout
- 500V_{rms} isolation
- PCB mounting
- UL 94 V-0 package materials
- Toroidal construction
- Fully encapsulated

DESCRIPTION

The 766 Series is a range of general purpose pulse transformers. Common applications include line coupling, impedance-matching, or isolating. The devices can also be used in small isolated power supplies or as common-mode chokes in filtering applications.

SELECTION GUIDE[1]

Order Code	Turns Ratio ±2%	Min. Primary Inductance μH	Min. Primary Constant, E_T Vμs	Max. Leakage Inductance μH	Max. Interwinding Capacitance pF	Max. DC Resistance Ω	Max. Isolation Voltage Vrms	Pin Connection Style	Mechanical Dimensions
Recommended / In Production									
76601/1C	1:1	1916	17.5	0.60	49	1.50	500	B	1
76601/2C	1:1	492	8.5	0.30	22	0.80			
76601/3C	1:1	219	5.5	0.25	12	0.50			
76602/1C	1:1:1	2060	17.5	0.60	72	1.50		C	2
76611/2C	4:1:1	643	9.92	1.70	13	0.80		E	
76615/1C	1_{CT}:1_{CT}	3200	45	4.00	75	1.00		D	
Please note: For additional variants please see 786 series datasheet.									
Discontinued									
76600/1C	1:1	1916	17.5	0.60	49	1.50	500	A	1
76600/2C	1:1	492	8.5	0.30	22	0.80			
76600/3C	1:1	219	5.5	0.25	14	0.50			
76600/4C	1:1	50	4.0	0.20	10	0.40			
76601/20C	1:1	20.1	2.5	0.20	5	0.20		B	
76601/23C	1:1	700	10.5	0.20	35	0.20			
76601/24C	1:1	11.7mH	50.5	0.86	250	1.35			
76616/3C	2_{CT}:1_{CT}	4350	23	3.00	35	1.00		D	2

ABSOLUTE MAXIMUM RATINGS

Operating free air temperature range	0°C to 70°C
Storage temperature range	-60°C to 125°C

SOLDERING INFORMATION[1]

Peak wave solder temperature	300˚C for 10 seconds
Pin finish	Matte tin with nickel pre-plate

1 For further information, please visit www.murata-ps.com/rohs

All specifications typical at T_A=25°C.

RoHS COMPLIANT

For full details go to
www.murata-ps.com/rohs

PACKAGE SPECIFICATIONS

MECHANICAL DIMENSIONS

1

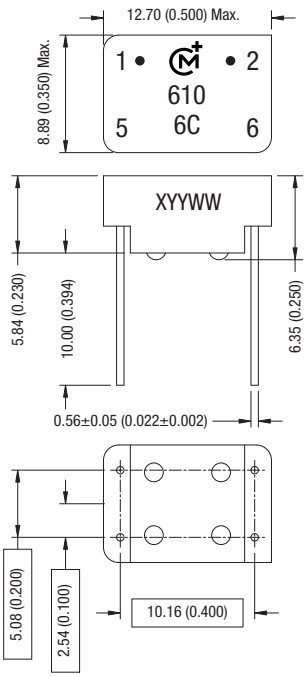

2

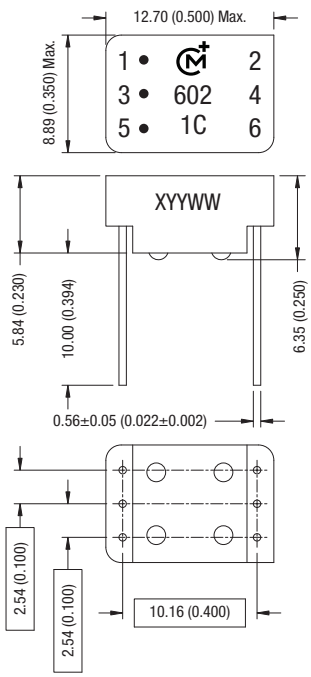

Unless otherwise stated all dimensions in mm (inches) ±0.25 (0.01).
All pins on a 2.54 (0.1) pitch and within ±0.25 (0.01) of true position.
Package Weight: 1.1g Typ.

RECOMMENDED FOOTPRINT DETAILS

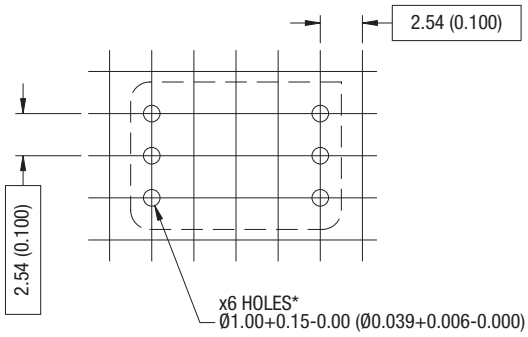

Holes may be omitted for variants with fewer than 6 pins.
Unless otherwise stated all dimensions in mm (inches) ±0.25 (0.01).
All pins on a 2.54 (0.1) pitch and within ±0.25 (0.01) of true position.

TUBE DIMENSIONS

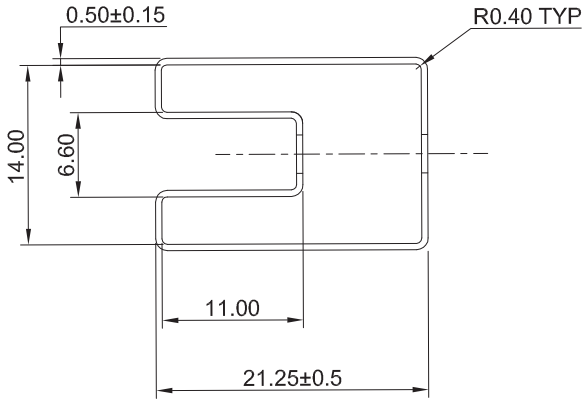

Tube length: 520±2.0 (20.47±0.08).
Unless otherwise stated all dimensions in mm (inches) +0.50 (0.02)/-0.00 (0.00).

PACKAGE SPECIFICATIONS (Continued)

PIN CONNECTION STYLE - 6 PIN DIP (TOP VIEW)

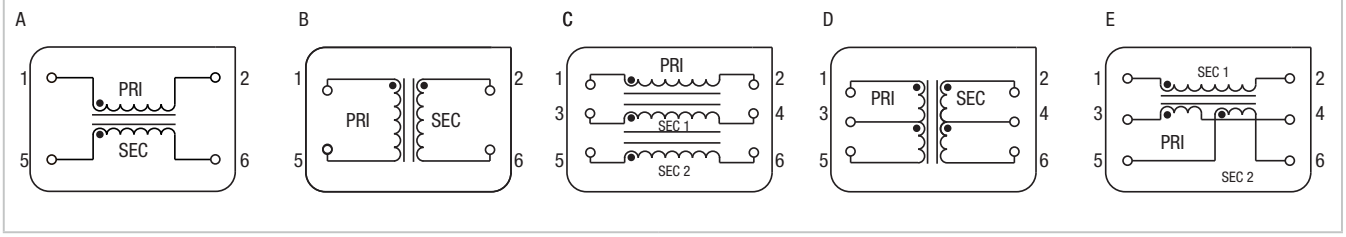

TECHNICAL NOTES

ISOLATION VOLTAGE

'Hi Pot Test', 'Flash Tested', 'Withstand Voltage', 'Proof Voltage', 'Dielectric Withstand Voltage' & 'Isolation Test Voltage' are all terms that relate to the same thing, a test voltage, applied for a specified time, across a component designed to provide electrical isolation, to verify the integrity of that isolation.

All products in this series are 100% production tested at their stated isolation voltage.

A question commonly asked is, "What is the continuous voltage that can be applied across the part in normal operation?"

For a part holding no specific agency approvals both input and output should normally be maintained within SELV limits i.e. less than 42.4V peak, or 60VDC. The isolation test voltage represents a measure of immunity to transient voltages and the part should never be used as an element of a safety isolation system. The part could be expected to function correctly with several hundred volts offset applied continuously across the isolation barrier; but then the circuitry on both sides of the barrier must be regarded as operating at an unsafe voltage and further isolation/insulation systems must form a barrier between these circuits and any user-accessible circuitry according to safety standard requirements.

REPEATED HIGH-VOLTAGE ISOLATION TESTING

It is well known that repeated high-voltage isolation testing of a barrier component can actually degrade isolation capability, to a lesser or greater degree depending on materials, construction and environment. This series has toroidal isolation transformers, with no additional insulation between primary and secondary windings of enamelled wire. While parts can be expected to withstand several times the stated test voltage, the isolation capability does depend on the wire insulation. Any material, including this enamel (typically polyurethane) is susceptible to eventual chemical degradation when subject to very high applied voltages thus implying that the number of tests should be strictly limited. We therefore strongly advise against repeated high voltage isolation testing, but if it is absolutely required, that the voltage be reduced by 20% from specified test voltage.

This consideration equally applies to agency recognised parts rated for better than functional isolation where the wire enamel insulation is always supplemented by a further insulation system of physical spacing or barriers.

DISCLAIMER

Unless otherwise stated in the datasheet, all products are designed for standard commercial and industrial applications and NOT for safety-critical and/or life-critical applications.

Particularly for safety-critical and/or life-critical applications, i.e. applications that may directly endanger or cause the loss of life, inflict bodily harm and/or loss or severe damage to equipment/property, and severely harm the environment, a prior explicit written approval from Murata is strictly required. Any use of Murata standard products for any safety-critical, life-critical or any related applications without any prior explicit written approval from Murata shall be deemed unauthorised use.

These applications include but are not limited to:

- Aircraft equipment
- Aerospace equipment
- Undersea equipment
- Power plant control equipment
- Medical equipment
- Transportation equipment (automobiles, trains, ships, etc.)
- Traffic signal equipment
- Disaster prevention / crime prevention equipment
- Data Processing equipment

Murata makes no express or implied warranty, representation, or guarantee of suitability, fitness for any particular use/purpose and/or compatibility with any application or device of the buyer, nor does Murata assume any liability whatsoever arising out of unauthorised use of any Murata product for the application of the buyer. The suitability, fitness for any particular use/purpose and/or compatibility of Murata product with any application or device of the buyer remain to be the responsibility and liability of the buyer.

Buyer represents and agrees that it has all the necessary expertise to create and implement safeguards that anticipate dangerous consequences of failures, monitor failures and their consequences, lessen the likelihood of failures that might cause harm, and take appropriate remedial actions. Buyer will fully indemnify and hold Murata, its affiliated companies, and its representatives harmless against any damages arising out of unauthorised use of any Murata products in any safety-critical and/or life-critical applications.

Remark: Murata in this section refers to Murata Manufacturing Company and its affiliated companies worldwide including, but not limited to, Murata Power Solutions.

This product is subject to the following operating requirements and the Life and Safety Critical Application Sales Policy:
Refer to: https://www.murata.com/en-eu/products/power/requirements

Murata Power Solutions (Milton Keynes) Ltd. makes no representation that the use of its products in the circuits described herein, or the use of other technical information contained herein, will not infringe upon existing or future patent rights. The descriptions contained herein do not imply the granting of licenses to make, use, or sell equipment constructed in accordance therewith. Specifications are subject to change without notice.

© 2021 Murata Power Solutions (Milton Keynes) Ltd.